Docket No. DMEA 4580

Contract No. Idm-E-1088

OFFICIAL FILE COPY
O. M. E
RECEIVED DEC 5 1960

DATE	INITIALS	[illegible]

PUNCHEON CAMP CREEK PROJECT

Grainger County, Tennessee

October, 1960

Contents

Geologic Report	Page
Summary	1
Work Performed	2
Property	4
Stratigraphy	4
Mascot Formation	4
Kingsport Formation	5
Longview Formation	5
Structure	6
Summary of Diamond Drilling	7
Stapleton-Dave Jackson Area	7
Green-Dalton Area	8
Central Area	8
Elvin Jackson Area	9
Cost of the DMEA Project	10
Conclusions	11

Illustrations

Plates

1. Regional Map of Eastern Tennessee Showing the Location of the Puncheon Camp Creek Prospect. Scale 1" = 13 mi.
2. Map of the Puncheon Camp Creek Area Showing Geology, Geochemistry, Diamond Drill Holes, and Property Lines. Scale 1" = 500'
3. Grid Map of the Puncheon Camp Creek Area Showing Location of Diamond Drill Holes and Survey Markers. Scale 1" = 200'
4. Reserves Map Showing Drilling Results on the Green-Dalton property. Scale 1" = 50'
5. Cross-Section C-1683
6. Cross-Section C-1656
7. Cross-Section C-1658

8. Cross Section C-1710
9. Cross Section C-1704
10. Cross Section C-1706
11. Cross Section C-1708
12. Cross Section C-1711
13. Cross Section C-1720
14. Cross Section C-1725
15. Cross Section C-1499
16. Cross Section C-1707
17. Cross-Section C-1712
18. Cross Section C-1713
19. Cross Section C-1717
20. Cross Section C-1719
21. Cross Section C-1709
22. Cross Section C-1723
23. Cross Section C-1724

ANNEX

Summary of Drill Hole Logs

GEOLOGIC REPORT

Summary

The Puncheon Camp Creek zinc prospect is located in the Copper Ridge Zinc district along Tennessee highway 131 five miles southwest of Thorn Hill, Grainger County, Tennessee. Investigations were begun by B. H. Putnam, Operator, in June, 1956, to prospect for commercial deposits of zinc.

During the period from July, 1957 to July, 1960, ninety-seven holes were drilled for a total of 51,189 feet, of which 47,838 feet were drilled with DMEA aid. Six holes were drilled by B. H. Putnam, Operator; seventy-one by B. H. Putnam, Operator, and the DMEA; and twenty by National Lead Company and the DMEA. Drilling to date has disclosed the presence of a mineralized body containing an estimated 450,000 tons of 3% zinc.

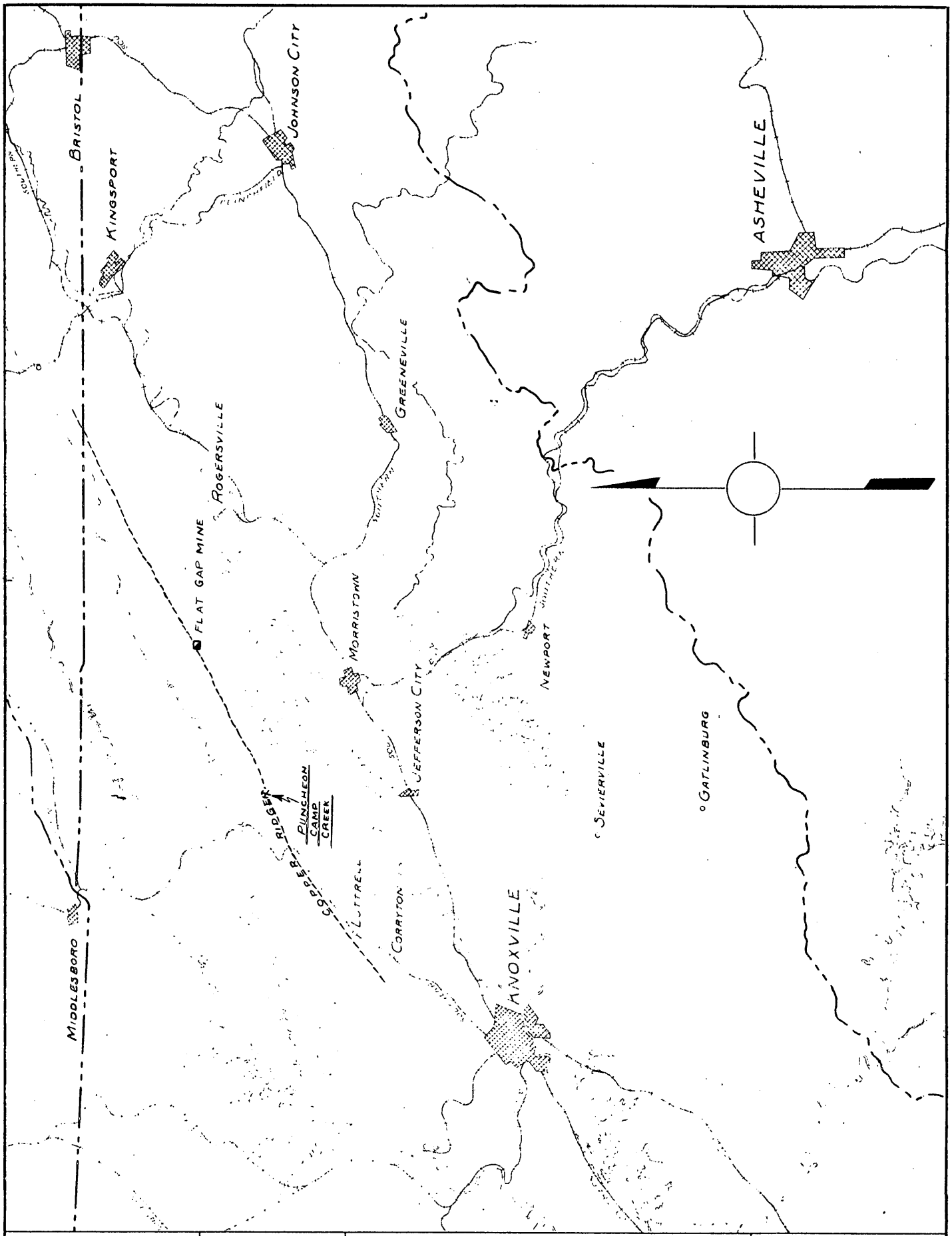

DRAWN FTF	CHECKED	THE NEW JERSEY ZINC COMPANY JEFFERSON CITY TENNESSEE	DATE 10-26-60
TRACED	APPROVED		SCALE 1" = 13 MILES.
REVISED	LOCATION MAP PUNCHEON CAMP CREEK PROJECT		AX TENN A-1727

THIS DRAWING IN DESIGN AND DETAIL IS OUR PROPERTY AND MUST NOT BE USED EXCEPT IN CONNECTION WITH OUR WORK. ALL RIGHTS OF DESIGN AND INVENTION ARE RESERVED. THIS DRAWING MUST BE RETURNED TO THE NEW JERSEY ZINC COMPANY.

X5453A 1M 11-54

Work Performed

Investigations were begun by B. H. Putnam, Operator in the Puncheon Camp Creek area in 1956 to determine if commercial deposits of zinc are present. The examination consisted of geologic mapping and prospecting followed by a geochemical survey for zinc. Plotting on the map of the zinc content of the samples revealed the presence of a series of positive soil anomalies along the Mascot-Kingsport contact and the top of the Lower Kingsport member of the Kingsport formation along the entire length of the area for a distance of 7400 feet. Additional samples were taken both north and south of the original sampling pattern until all of the anomalous areas were outlined. As a result of this work, the anomalies which previously appeared to be scattered were enlarged and localized into several large anomalies.

On the southwesternmost portion of the property there is a large anomaly having a strike extent of 1400 feet and a dip extent of 1750 feet. Zinc values in the anomalous areas range from .05% to 0.30 + % with background values ranging from 0.02% to 0.05%. Northeast of this anomaly, smaller anomalies occur along strike for a distance of 2800 feet. Beginning on the southwest end of the Stapleton farm and continuing northeast along strike for a distance of 2300 feet, practically the entire zone of the lower part of the Mascot, Kingsport, and the upper part of the Longview is anomalous.

In December, 1956, an application for aid to explore the Puncheon Camp Creek area was filed with the DMEA. In March, 1957, an agreement was reached between National Lead Company and B. H. Putnam, Operator, whereby National Lead Company would assume the responsibilities of the DMEA contract and complete the exploration program. On May 21, 1957, an agreement was reached, and a contract signed, between the DMEA and National Lead Company, to explore the commercial possibilities of zinc mineralization in the Puncheon Camp Creek area. In this contract, the government agreed to contribute 50% of the costs requested for exploration or up to $85,062.50. The $170,125.00 is the total of the estimated costs of $150,000.00 for 50,000 feet of drilling at $3.00 per foot; $10,000.00 for 5,000 feet of reaming at $2.00 per foot; $825.00 for 550 assays; $300.00 for 150 core boxes; and $9000.00 for incidentals at $0.18 per foot of drilling.

Drilling commenced on the project, under the DMEA contract, on July 26, 1957. From July, 1957, to March, 1958, National Lead Company drilled twenty holes totalling 13,158 feet of the allotted 50,000 feet. In March, 1958, National Lead Company informed B. H. Putnam of their intention to withdraw from the project. The Putnam group accepted the assignment of the DMEA contract from National Lead Company.

During the period of assigning the contract, the drilling program was informally recessed. On April 8, 1959, core drilling was resumed by B. H. Putnam, Operator, and the DMEA. From April 8, 1959 to June 29, 1960, Putnam drilled 77 holes totalling 47,841 feet. Of this drilling, 6 holes totalling 3351 feet were drilled without DMEA aid.

In March 23, 1960, an agreement was reached between The New Jersey Zinc Company and B. H. Putnam in which the Zinc Company would finance and supervise the remaining drilling program. This agreement included all of the properties in the contract area except the Green-Dalton property, the Rosa Bullen property, and the eastern tract of the W. B. Dalton property. Neither the DMEA contract nor the properties were assigned to the Zinc Company. A total of 19 holes were drilled under this agreement. The drilling on this project was terminated on June 29, 1960 with the bottoming of hole JA-16.

Property

The properties included within the Puncheon Camp Creek project area are shown on Plate 2 and are listed below:

Name	Acres
Viva and W. H. Stapleton	218.00
Elvin and Bessie Jackson	105.00
Elmer and French Breeding	15.00
S. S. and Sallie Breeding	51.00
Austin and Docie Johnson	45.00
D. R. Coffman, Widower	25.00
Rosa Bullen	~~29.00~~ 60.00
T. A. Green & A. B. Dalton	58.00
Pryor and Gracie Acuff	45.00
W. B. and Sara J. Dalton	77.00
J. C. and Imogene McGinnis	62.00
H. B. and Gynce Winstead	51.00
Dave and Mary Jackson	~~100.00~~ 132.00
William H. and Hance M. Johnson	55.00
Total	936.00

The Dave Jackson (January, 1960) and the W. H. Johnson (December, 1957) properties were added to the project after the contract was entered into.

Stratigraphy

The Puncheon Camp Creek properties are underlain by the Knox dolomite and Chickamauga limestone of Ordovician age. The Knox underlying the properties can be divided into the Chepultepec, the Longview, the Kingsport, and the Mascot formations. Since the drilling was confined to the exploration of the Mascot, Kingsport, and Upper part of the Longview, only these formations will be discussed.

Mascot formation: At Puncheon Camp Creek, the Mascot is approximately 650 feet thick. The top of the formation is unconformably overlain by the Chickamauga limestone and the base is marked by a thin chert-cemented quartz-sand layer known as the chert-Matrix (CEMTX) sand.

The formation is mostly well-bedded light, medium, and dark gray, fine crystalline dolomite, occasionally interbedded with thin beds of medium and coarse crystalline dolomite. Chert layers and nodules and thin quartz sands are randomly scattered throughout the formation.

Outcrops of the Mascot are common, especially in the upper part of the formation, and occur throughout the strike length of the property. The best exposures occur along Puncheon Camp Creek and the adjacent slopes. Although brecciation and mineralization of the dolomite have been observed throughout the formation they appear to be more common near the base.

Kingsport formation: The underlying Kingsport formation is approximately 240 feet thick and is divided into two members, the Upper and Lower Kingsport.

The Upper Kingsport is approximately 140 feet thick and consists mostly of well-bedded, fine-crystalline dolomites. The lithology is similar to the Mascot formation. The top of the unit is marked by the chert-matrix sand, and the base is marked by a shaly coarse-crystalline zone called the TR horizon. The lower part of the member is commonly brecciated and mineralized. The sphalerite is associated with a white dolomite that occurs between the breccia fragments of the host rock.

The Lower Kingsport is approximately 100 feet thick and consists of limestones interbedded with fine, medium, and coarse crystalline dolomites. In and adjacent to the mineralized areas, the limestones are frequently represented by coarse crystalline dolomites. The sphalerite in the Lower Kingsport occurs either as fillings in breccias similar to those previously mentioned or as crystals filling the openings of porous coarse-crystalline dolomites. The top of the unit is marked by the TR horizon and the base is marked by a fine-crystalline dolomite (T bed).

Longview formation: The Kingsport is underlain by the Longview formation which consists of limestone and coarse crystalline dolomites interbedded with fine-crystalline dolomites and chert beds. Although no thick high-grade accumulations of zinc were penetrated, a considerable amount of mineralization was found in the upper part of the formation. One hole (6D-7A)

had scattered mineralization for a penetration thickness of 90 feet below the top of the Longview.

Structure

The average strike of the rocks in the Puncheon Camp Creek area is N 63° E and the dip is 36° south.

Twenty-eight hundred feet southwest of the Puncheon Camp Creek Road, mapping of the Mascot-Chickamauga contact revealed the presence of a northwest trending tear fault. The apparent horizontal displacement is approximately 50 feet with the southwest block displaced to the north. The vertical displacement is on the order of 120 feet if the fault interpreted on section C-1707 is the same one. Sixty-three hundred feet southwest of the Puncheon Camp Creek road, another tear fault has been mapped that trends to the northwest. This fault has an apparent horizontal displacement of 30 feet with the southwest block displaced to the north. The vertical displacement is on the order of 40 feet (Section C-1499). Nine hundred feet southwest of this fault, another tear fault was mapped that trends to the northwest. The southwest block appears to have been horizontally displaced 50 feet or so to the south. The vertical displacement is on the order of 40 feet (Section C-1499).

Nineteen cross-sections were prepared that show the results of the drilling. Ten of them are dip and nine are strike or off-strike sections. The structural interpretations shown on the sections are the product of correlating the data obtained from detailed logging of the core. It is realized that in some cases where good stratigraphic control is lacking, other interpretations of the data could be justifiably made. In these cases, the pattern as interpreted from areas where structural features were more certain was followed.

Excellent control of the different stratigraphic horizons is obtained in the Mascot formation and the Upper Kingsport member of the Kingsport formation. Most of the individual beds within these formations are readily recognized and logged. The sections show only the Chert Matrix (CEMTX) sand but many other recognizable horizons were also used to correlate from hole to hole.

Stratigraphic markers are not as readily recognized or correlated from hole to hole in the Lower Kingsport member as in the stratigraphically higher beds. This is in part due to the brecciation of the lower beds and in part due to the lateral variability of the lithologies. The top and bottom of the Lower Kingsport (TR and T) are usually recognized. The cross-sections show the TR and the T horizons.

Summary of Diamond Drilling

To date, 113 diamond drill holes have been drilled in the Puncheon Camp Creek area. Drilling operations have been conducted over a strike distance of 8200 feet, extending from the western part of the Dave Jackson farm westward to the eastern part of the Austin Johnson farm. The holes drilled are shown on the plan maps and cross-sections accompanying this report. The holes drilled under the DMEA program were on strike and dip fences at least 400 feet apart with holes at least 100 feet apart on the fences. In order to simplify the discussion of the drilling done over the entire project, the project has been divided from east to west into four separate areas. The decision as to what constituted an area is based on the location of the individual geochemical anomalies, the concentration of the drill holes, and the results of the drilling.

The Stapleton-Dave Jackson Area: A total of 39 holes have been drilled in the vicinity of Puncheon Camp Creek on the Dave Jackson and William Stapleton properties. In 1953, prior to the DMEA program, The New Jersey Zinc Company drilled a total of sixteen holes on the Stapleton property. Eleven of the holes were drilled downdip and east of the mineralized outcrops exposed along Puncheon Camp Creek. Five holes were drilled on the western part of the Stapleton farm. Ten of the sixteen holes penetrated various thicknesses of mineralized rock grading less than 12' of 3.9% zinc.

Under the DMEA program National Lead Company or B. H. Putnam, Operator, drilled twenty-three holes in the Stapleton-Dave Jackson area. Four of the holes were drilled on the western part of the Dave Jackson farm (DJ-1 thru 4), and eighteen were drilled on various portions of the Stapleton property (ST-1 thru 18). One hole was drilled on the H. B. Winstead farm (WS-1). Of the twenty-three holes, 13 holes penetrated mineralized rock containing less than 12 feet of

3% zinc. None of the holes penetrated accumulations that assayed 12 feet of 3% zinc or greater.

Most of the exploration activity on these properties was confined to the areas where drilling depths were 500 feet or less. Three holes, ST-1 (607'), ST-3 (642'), and WS-1 (910') were drilled deeper than 500 feet.

Green-Dalton Area: A total of thirty-six holes were drilled on the Green-Dalton farm located west of the W. Stapleton property. Two holes (60-1,2) were drilled by National Lead Company and the DMEA; six holes were drilled by B. H. Putnam, Operator; and twenty-eight were drilled by B. H. Putnam, Operator and the DMEA. Five of the holes penetrated mineralized rock that assayed 12' of 3% zinc or greater, 21 holes penetrated mineralization that assayed less than 12' of 3% zinc and 9 holes were blank.

Geologic studies of the drilling results indicate the presence of a mineralized body trending in a northwest-southeast direction that is 1400 feet in length and averages 100 feet in width. The body varies in thickness from 8 to 36 feet, averaging 16 feet. The grade of the mineralization ranges from 2.2% to 5.9% zinc. Although the mineralization is present over a wide stratigraphic range, the majority of it occurs in the Lower Kingsport formation. The body is still open on the southeast and deeper end. Further drilling along a projection of the indicated trend will probably extend the length and increase the tonnage of this body. Drilling to date indicates that the body contains 450,000 tons that averages 3% zinc.

Central Area: The Central area is composed of the W. B. Dalton, the Rosa Bullen, and the J. C. McGinnis properties. Because of the lack of large geochemical anomalies over the outcrop of the Kingsport dolomite, this area was sparsely drilled. Three holes (DA-1, 2 & DAL-1) were drilled on the two W. B. Dalton tracts. One hole was drilled on the Rosa Bullen property (BUL-1) and six on the J. C. McGinnis tract (MG-1,2,3,4,5,6). Of the ten holes drilled, six found very thin low-grade accumulations of mineralized rock. Seven of the holes (MG,1,2,3,4,5 and DA-1,2) were drilled by National Lead Company and the DMEA and the remaining three were drilled by B. H. Putnam, Operator, and the DMEA.

Elvin Jackson Area: The Elvin Jackson area includes the S. S. Breeding, the D. R. Coffman, the Pryor Acuff, the Elvin Jackson, and the Austin Johnson properties. Drilling in this area was designed to explore for ore that might be expressed surficially by the large geochemical anomaly on the Elvin Jackson farm. A total of twenty-seven holes were drilled on these properties. Two holes (BR-1,2) were drilled on the S. S. Breeding property (by B. H. Putnam & DMEA), Seven (CO-1-7) on the D. R. Coffman property (by National Lead Company & DMEA), One (AC-1) on the Pryor Acuff (by B. H. Putnam & DMEA), Sixteen (JA-1-16) on the Elvin Jackson property (by B. H. Putnam & DMEA). The drilling of nineteen of the holes (JA-3-16; AC-1, AJ-1, BR-1,2, and MG-6) was supervised by The New Jersey Zinc Company under an agreement between the Zinc Company and the B. H. Putnam interests.

Of the twenty-seven holes drilled, twelve intersected scattered low-grade mineralization. One hole (JA-7) penetrated eight feet of mineralization that assayed 12.76% zinc. Attempts to intersect an extension of this mineralization were not successful.

Costs of the DMEA Project

A Summary of the DMEA Supported Costs Incurred During

The Exploration Project Contract

	Authorized by Contract				Incurred by Operator			Government Participation
Operation	Unit	Units	Unit Cost	Costs	Units	Unit Cost	Costs	@ 50%
Drilling	Feet	50,000	3.00	$150,000.00	47,838	2.981	$142,619.25	$71,309.625
Reaming	Feet	5,000	2.00	10,000.00	1,266	2.00	2,532.00	1,266.000
Assays	Each	550	1.25	825.00	237	1.239	293.75	146,875
Core Boxes	Each	150	2.00	300.00	150	1.935	290.25	145.125
Incidental Allowance	Feet	50,000	0.18	9,000.00	47,838	0.18	8,610.84	4,305.420
Totals				$170,125.00			$154,346.09	$77,173.045

Conclusions

Drilling done under the DMEA contract at Puncheon Camp Creek discovered on the Green-Dalton property a zone of mineralization estimated to contain 450,000 tons grading 3% zinc. The body appears to be 1400 feet long, averages 100 feet in width and plunges to the southeast. On the southeast end, the body is 950 feet deep and has not been terminated by drilling. Further deeper drilling along the trend will be expected to extend its length.

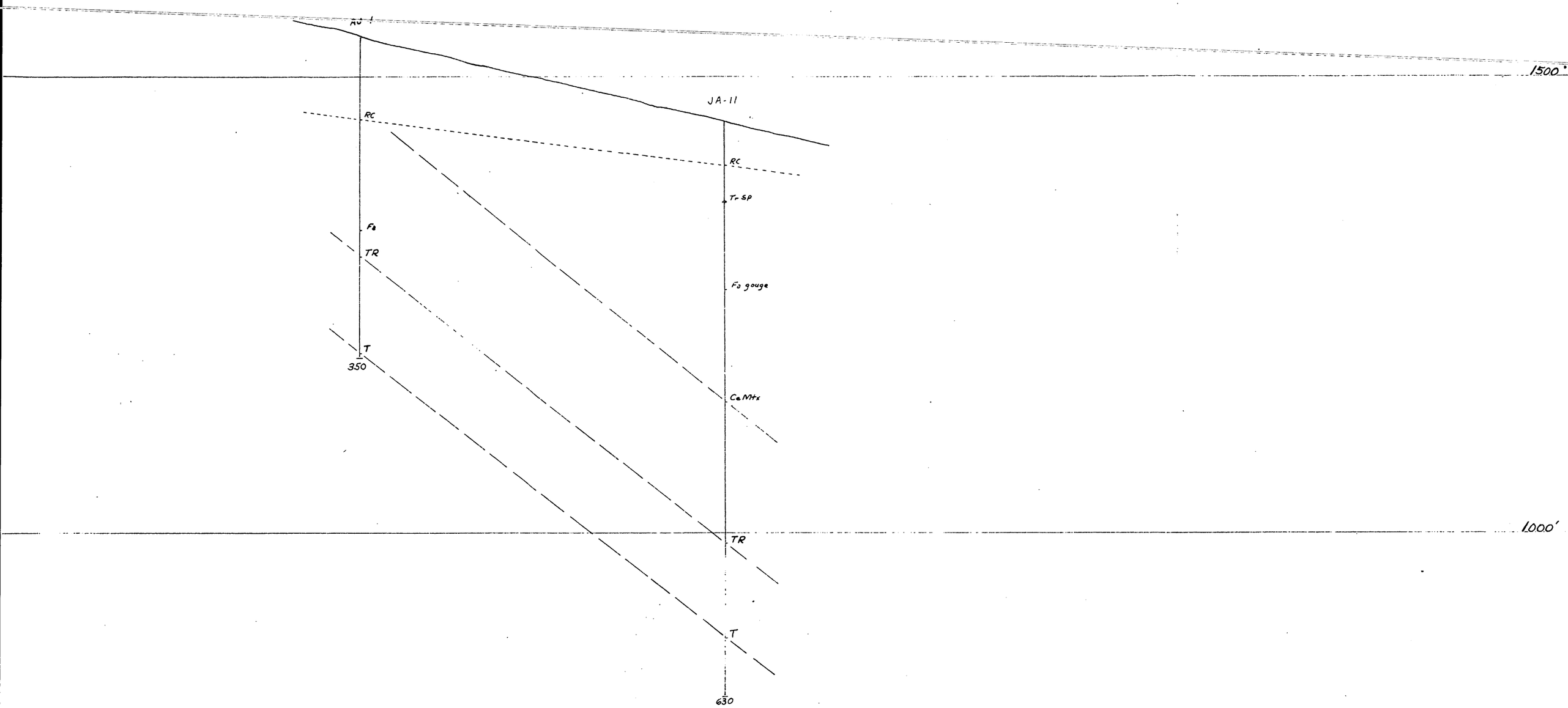
AU-1
JA-11
1500'
RC
RC
Tr-SP
Fa
TR
Fa gouge
T
350
Ca Nitx
1000'
TR
T
630

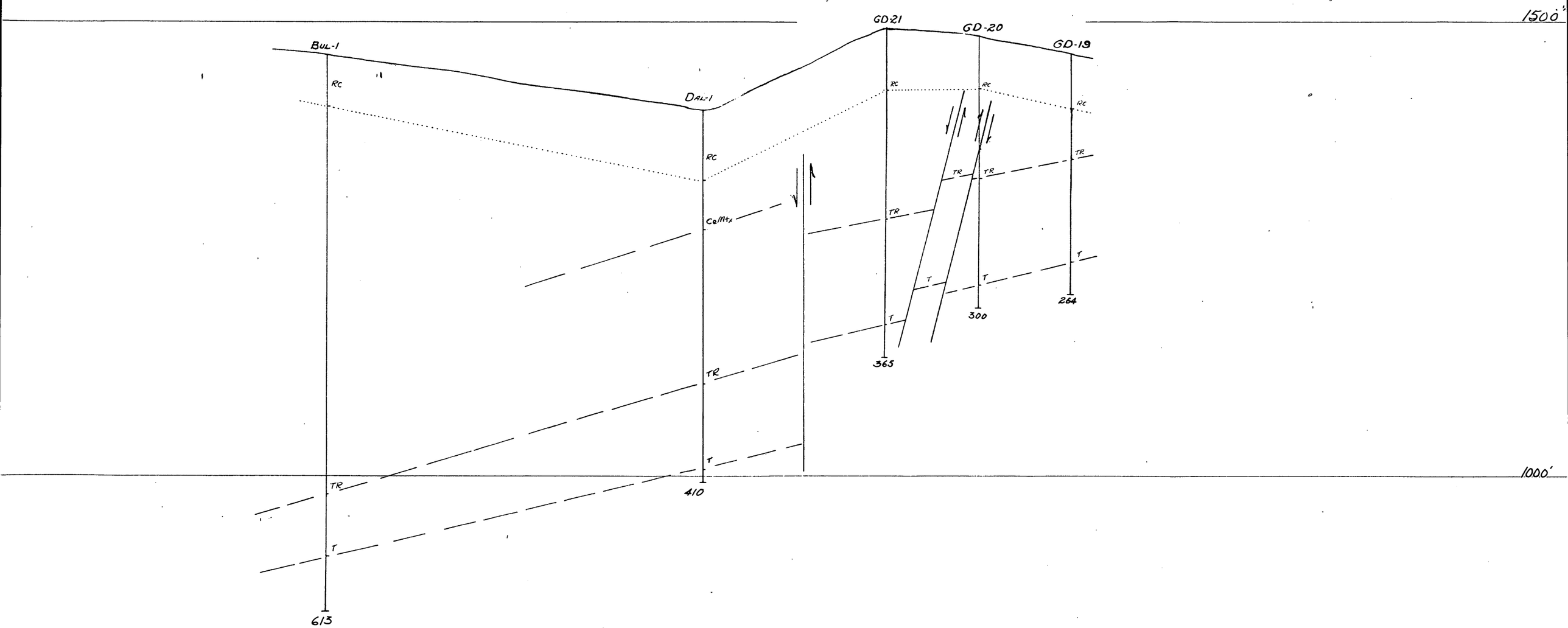
1500'
1000'
BUL-1
DAL-1
GD-21
GD-20
GD-19
RC
CaMtx
TR
T
613
410
365
300
264

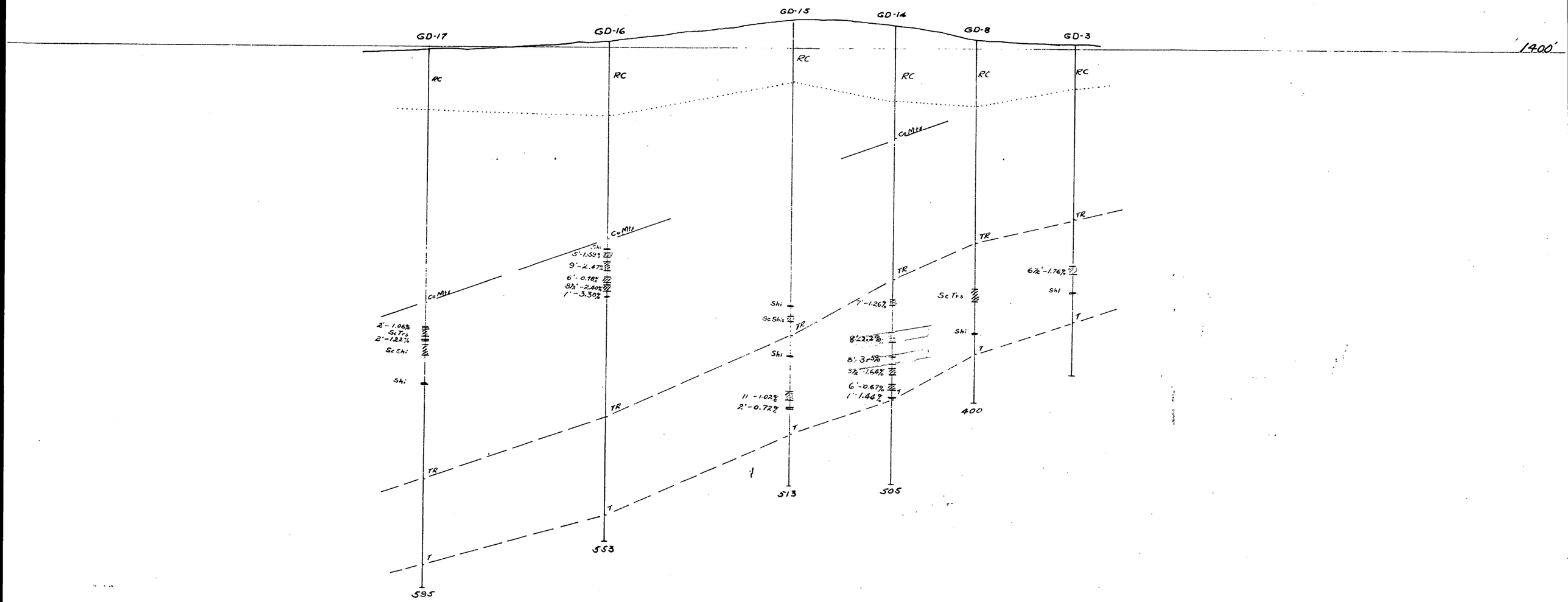
GD-17
GD-16
GD-15
GD-14
GD-8
GD-3
1400'
RC
RC
RC
RC
RC
RC
CoMix
CoMix
CoMix
TR
TR
TR
TR
TR
T
T
T
T
T
T
Shi
5'-1.59%
9'-2.47%
6'-0.78%
8½'-2.80%
1'-3.30%
2'-1.06%
Sc Trs
2'-1.22%
Sc Shi
Shi
Shi
Sc Shis
Shi
11'-1.02%
2'-0.72%
7'-1.26%
8'-2.2%
8'-3.5%
5½'-1.60%
6'-0.67%
1'-1.44%
Sc Trs
Shi
6½'-1.76%
Shi
595
553
513
505
400

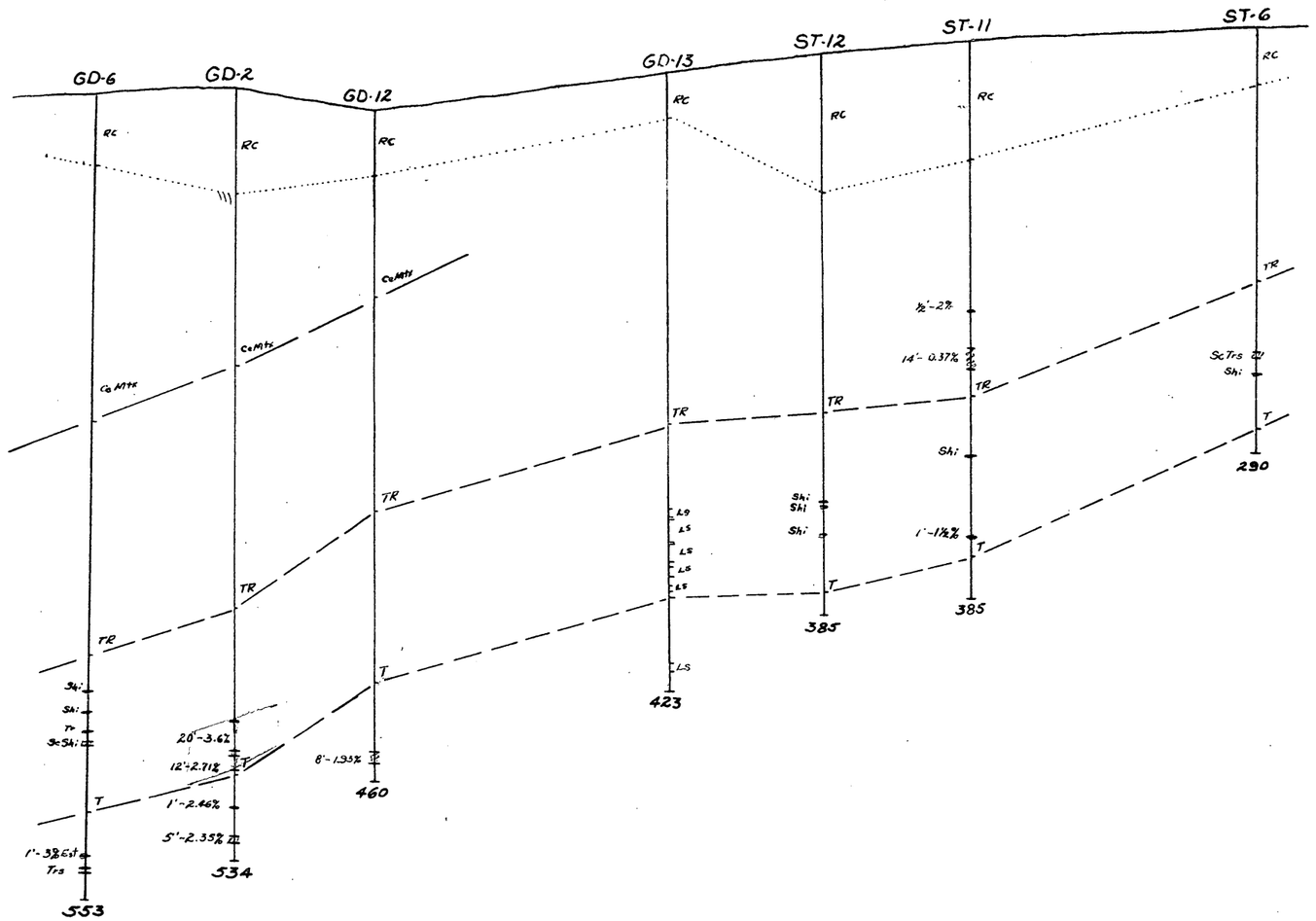
1500'
1000'
GD-6
GD-2
GD-12
GD-13
ST-12
ST-11
ST-6
RC
Ca Mtt
TR
T
Sh:
Tr
Sc Tr
Tr s
1'-32.6%
5'-2.35%
1'-2.46%
12'-2.71%
20'-3.6%
8'-1.95%
LS
1'-1½%
14'-0.37%
½'-2%
553
534
460
423
385
385
290

Plate - 19.

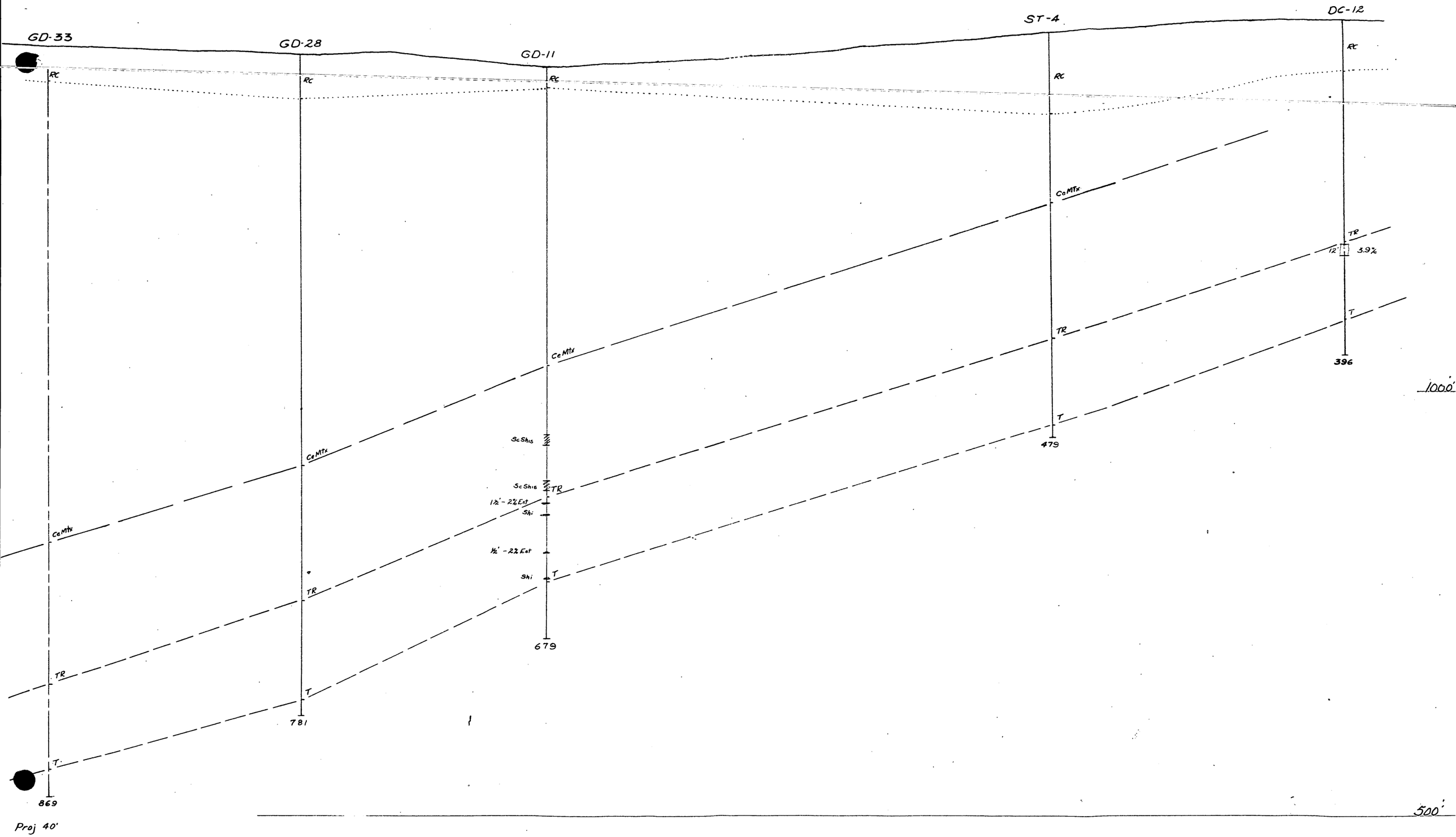

C-1717

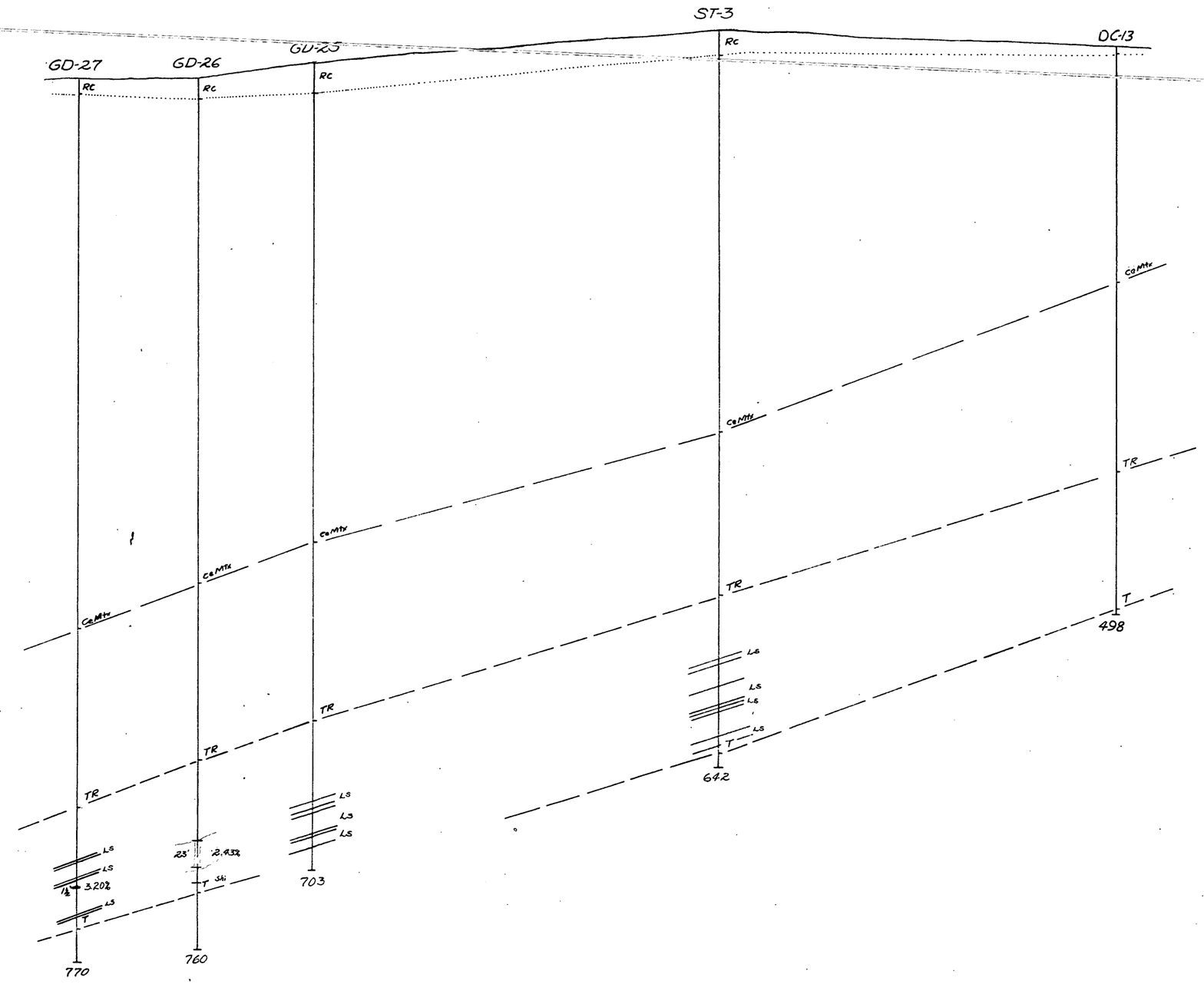
1500'
1000'
500'
ST-3
DC-13
GD-27
GD-26
GD-25
RC
CaMtx
TR
T
LS
498
642
703
770
760
23'
2.43%
3.20%
Sh

1000'
500'
GD-35
GD-29
GD-30
GD-31
GD-32
910
915
1000
1067
1125
TR
T
LS
Ski
13'-1.57%
20'-0.89%
7'-3.08%
1'-1.68%
19'-5.58%
28'-5%
19'-18%
1'-5.9%
28'-22%

Plate # 22

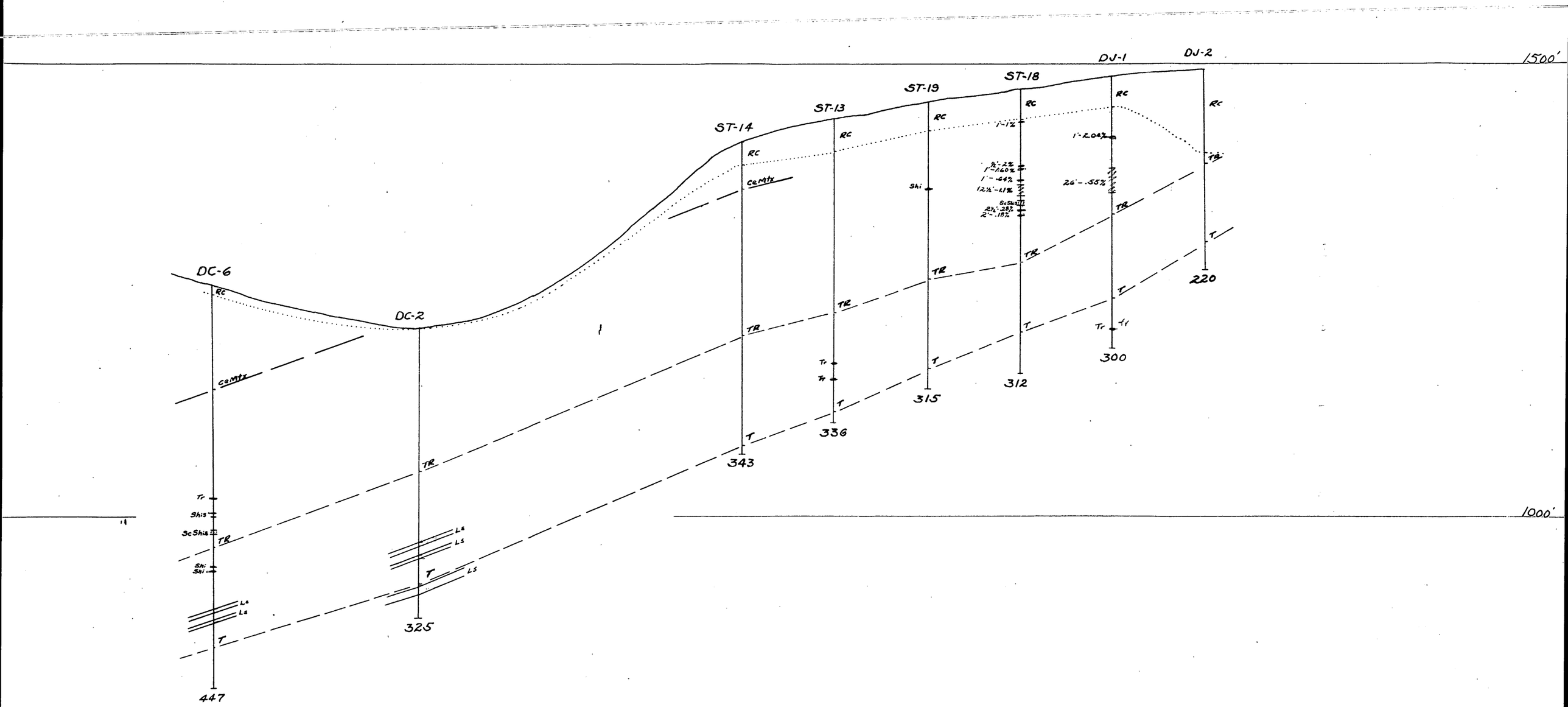

C-1723

Plate - 6.

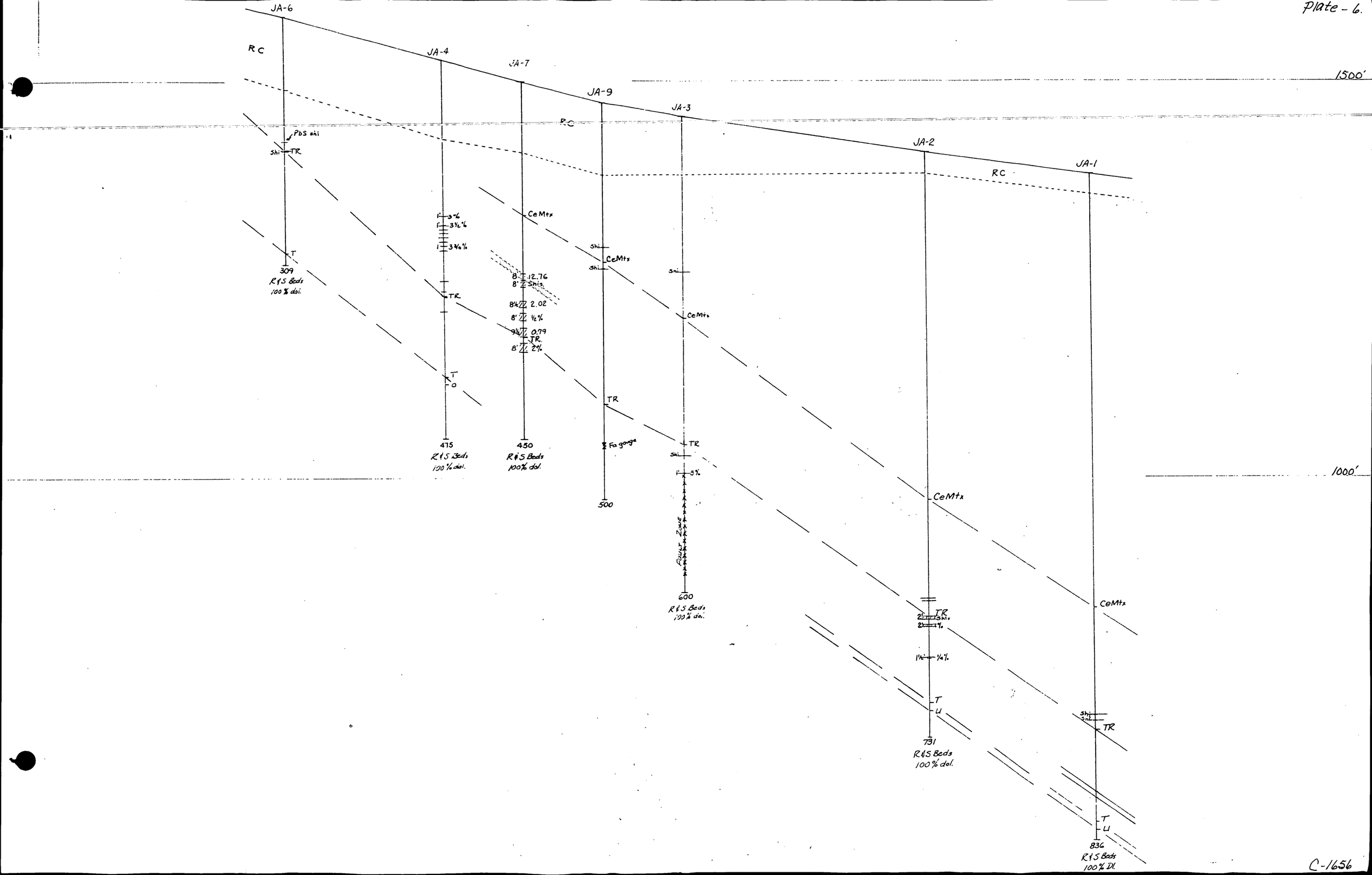

C-1656

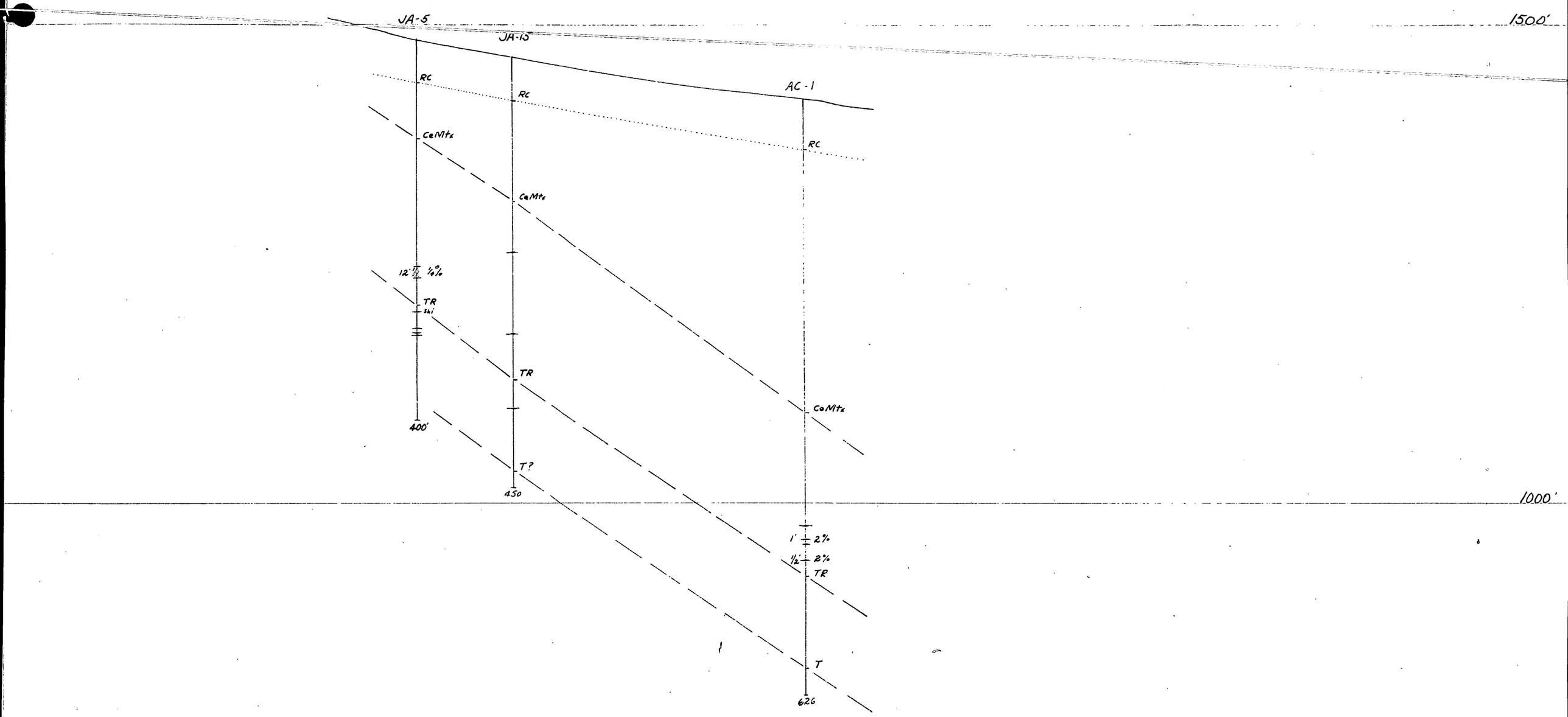
1500'
JA-5
JA-15
AC-1
RC
RC
RC
CaMtx
CaMtx
CaMtx
12' 1/4 1/4%
TR
shi
TR
400'
T?
450
1000'
1' 2%
1/2' 2%
TR
T
626

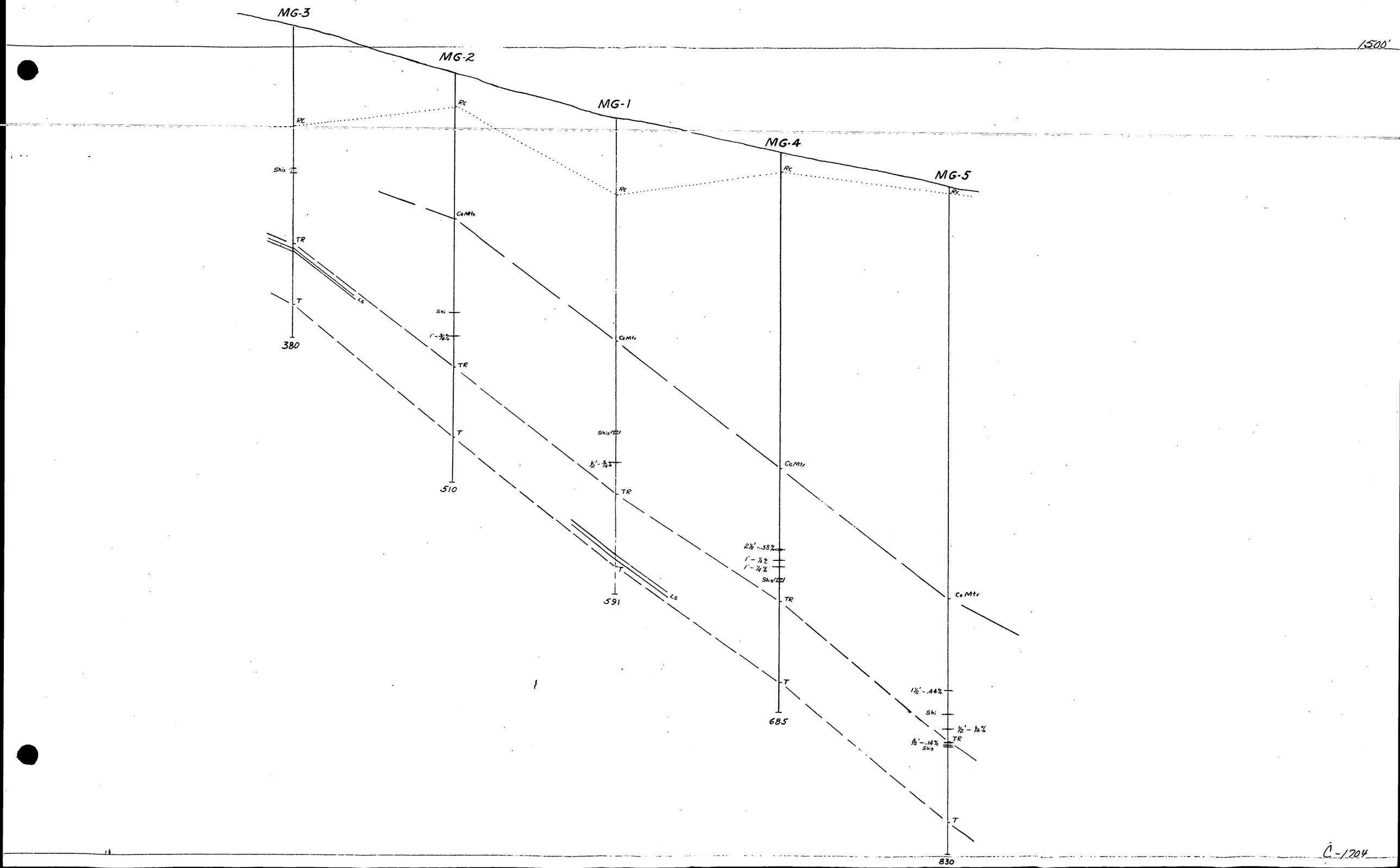
1500'
MG-3
MG-2
MG-1
MG-4
MG-5
Rc
Shis
TR
T
LS
380
CeMtx
Shi
1'-3/4%
510
1/2'-3/4%
591
2 1/2'-.38%
1'-1/4%
1'-1/4%
685
1 1/2'-.44%
1/2'-1/4%
1/2'-.14%
830

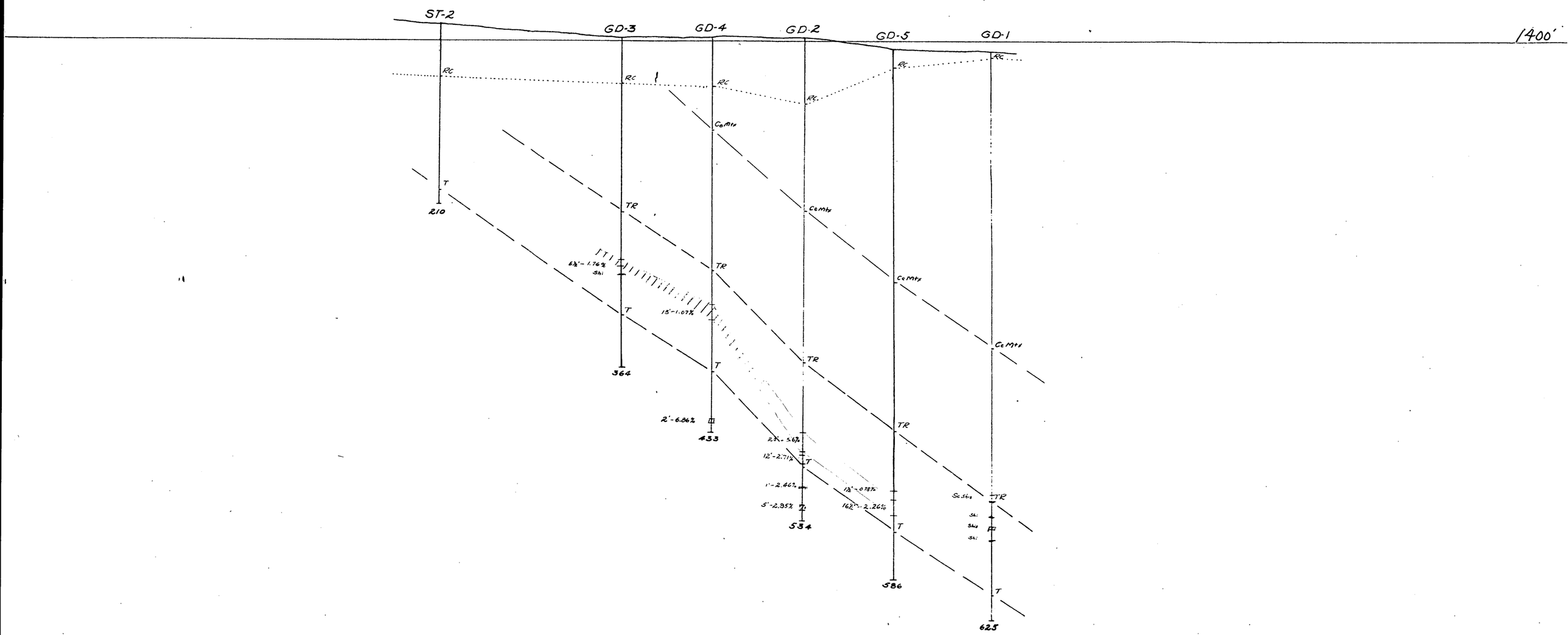
ST-2
GD-3
GD-4
GD-2
GD-5
GD-1
1400'
RC
T
210
TR
6½'-1.76%
Shi
15'-1.07%
364
2'-6.86%
433
2½'-5.67%
12'-2.71%
1'-2.46%
5'-2.95%
534
12½'-0.78%
16½'-2.26%
586
Sc Shis
Shi
Shis
Shi
625

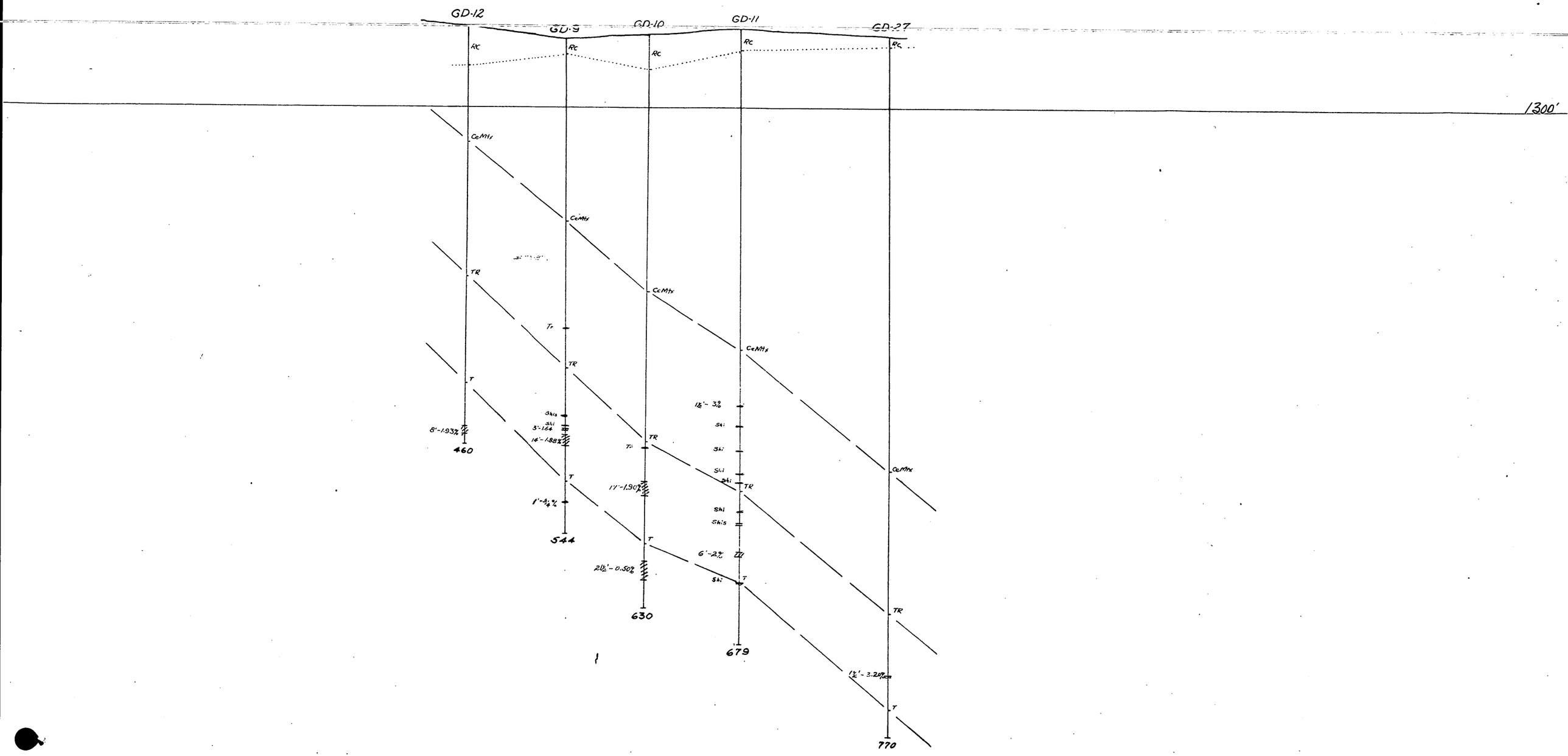
GD-12
GD-9
GD-10
GD-11
GD-27
RC
1300'
CeMtx
TR
Tr
T
Shis
Shi
3'-1.64
14'-1.88%
8'-1.93%
1'-4¼%
460
544
11'-1.90%
2½'-0.50%
630
1½'-3%
6'-2%
679
1½'-3.20%
770

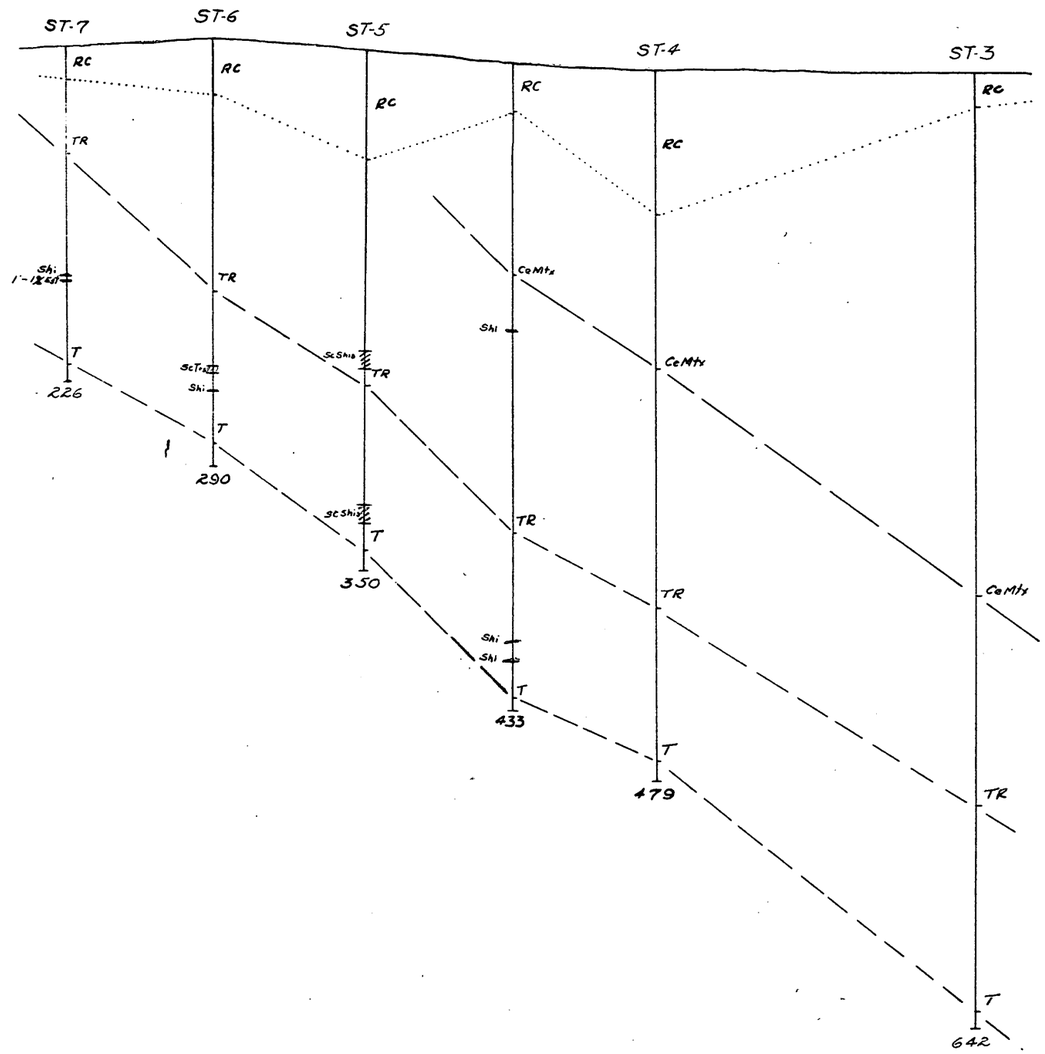
1500'
1000'
ST-7
ST-6
ST-5
ST-4
ST-3
RC
TR
T
Shi
1'-1½ Kd
226
290
350
433
479
642
ScShi
ScT
CeMtx

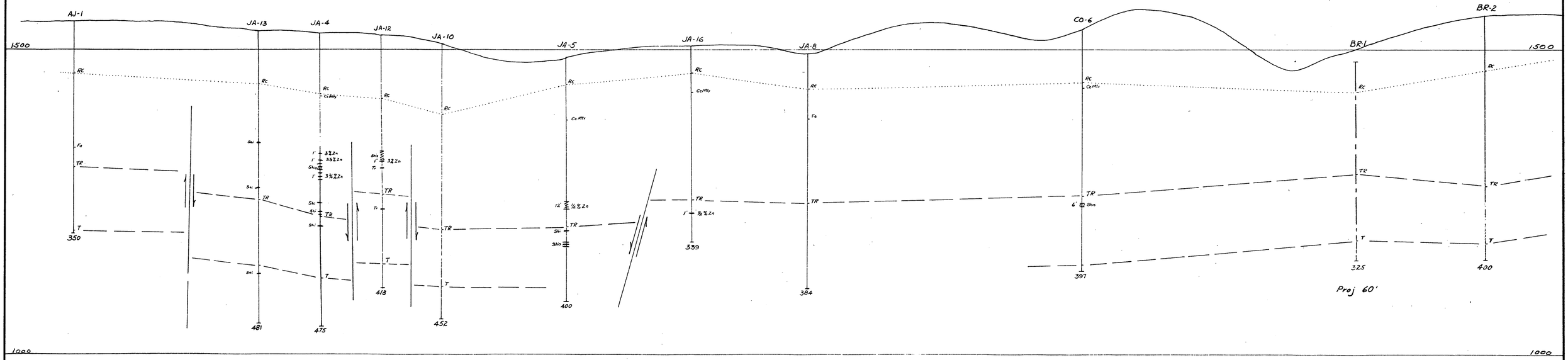
AJ-1
JA-13
JA-4
JA-12
JA-10
JA-5
JA-16
JA-8
CO-6
BR-1
BR-2
1500
1000
RC
Fa
TR
T
Ski
Sho
Tr
Cement
1' 3%Zn
1' 3½%Zn
1' 3½%Zn
1' 3%Zn
Sho
1' 3%Zn
Tr
12' ½%Zn
Ski
Sho
1' ½%Zn
6' Sho
350
481
475
413
452
400
339
384
397
325
400
Proj 60'

C-1499

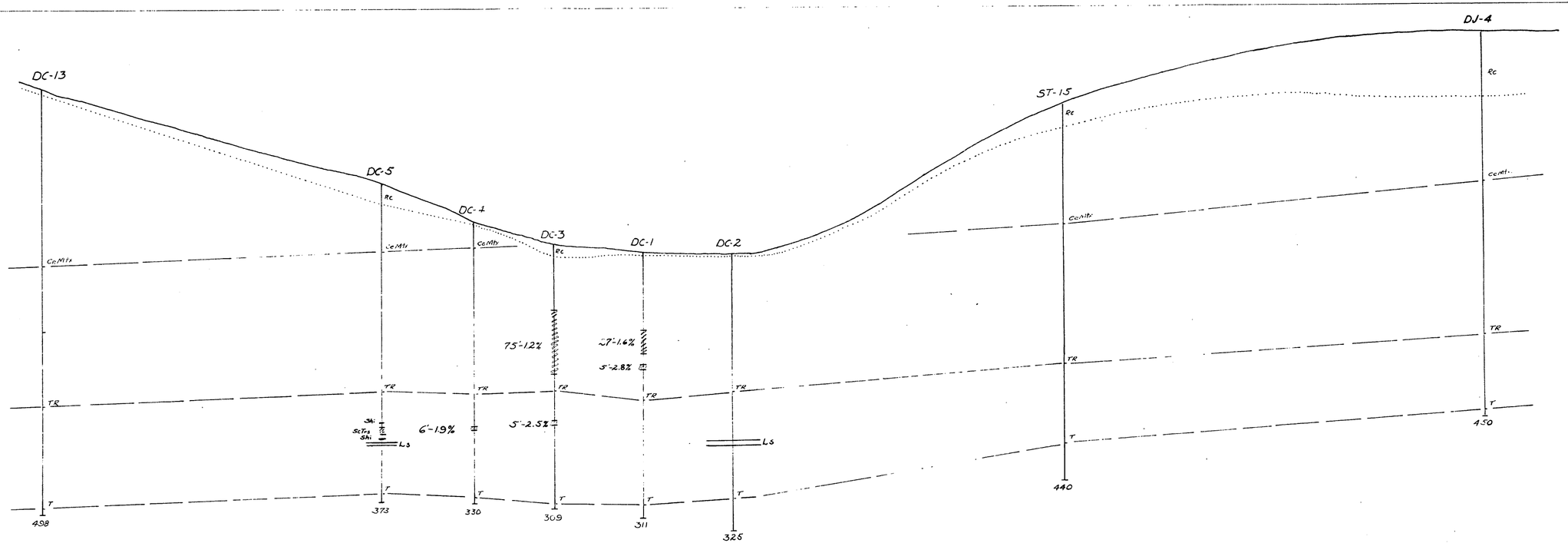
1500
1000
DC-13
DC-5
DC-4
DC-3
DC-1
DC-2
ST-15
DJ-4
Rc
CeMtr
TR
T
Ls
Shi
ScTrs
75'-12%
27'-1.6%
5'-2.8%
6'-1.9%
5'-2.5%
498
373
330
309
311
325
440
450

Annex

The following hole summaries are alphabetically indexed. The letter prefix is an abbreviation of the property on which the hole is located.

Summary of Hole AC-1

PUNCHEON CREEK PROJECT

DMEA Contract with B. H. Putnam, Operator

Hole No.	AC-1	Collared:	4-28-60
Farm:	P. Acuff	Bottomed:	5-13-60
Loc. N.	47,446.53	Depth:	626
E.	42,463.45	Reaming:	
Elev.	1,426.44	Casing:	
Contractor:	E. J. Longyear	Cement:	None
Logged By:	Hill & Fischer	Overburden:	53

Results

Top Of:		Zinc Mineralization	Pyrite Mineralization
Mascot			
Kingsport	330	464-465, 2% est. 483-483½, 2% est.	Shine @ 338, 525
"R" bed "S" bed	500		
Longview ("T"bed)	596		

Summary of Hole AJ-1

PUNCHEON CREEK PROJECT

DMEA Contract with B. H. Putnam, Operator

Hole No.	AJ-1	Collared:	5-9-60
Farm:	Austin Johnson	Bottomed:	5-13-60
Loc: N	47,341.40	Depth:	350
E	41,556.41	Reaming:	
Elev:	1,545.99	Casing:	
Drilled By:	Putnam Drlg. Co.	Cement:	None
Logged By:	W. Hill	Overburden:	90'

Results

Top Of:		Zinc Mineralization	Pyrite Mineralization
Mascot			288-295, 2% est.
"R" bed	243		
"S" bed			
Longview ("T"bed)	347		

Summary of Hole BUL-1

PUNCHEON CREEK PROJECT

DMEA Contract with B. H. Putnam, Operator

Hole No.	BUL-1	Collared:	2-21-59
Farm:	Rosa Bullen	Bottomed:	3-3-59
Loc: N	48,157.03	Depth:	612'
E	45,523.29	Reaming:	None
Elev:	1,463.19	Casing:	None
Drilled By:	Putnam Drlg. Co.	Cement:	None
Logged By:	W. Hill	Overburden:	55'

Results

Top Of:		Zinc Mineralization	Pyrite Mineralization
Mascot			
Kingsport (Mss)	220		
"R" bed	484		
"S" bed			
Longview ("T")bed	551		

Summary of Hole BR-1

PUNCHEON CREEK PROJECT

DMEA Contract with B. H. Putnam, Operator

Hole No.	BR-1	Collared:	5-26-60
Farm:	S. S. Breeding	Bottomed:	6-2-60
Loc: N	48,488.16	Depth:	325
E	43,277.08	Reaming:	
Elev:	1,521.60	Casing:	
Drilled By:	Putnam Drlg. Co.	Cement:	
Logged By:	Hill & Fischer	Overburden:	49

Results

Top Of:		Zinc Mineralization	Pyrite Mineralization
Mascot			
Kingsport (CMss)			162½-163½, 3/4% est. Shine @ 195, 211, 218-219, 247-248, 257-257½
"R" bed	184		
"S" bed			
Longview ("T"bed)	294		

Summary of Hole BR-2

PUNCHEON CREEK PROJECT

DMEA Contract with B. H. Putnam, Operator

Hole No.	BR-2	Collared:	6-2-60
Farm:	S. S. Breeding	Bottomed:	6-8-60
Loc: N	48,536.85	Depth:	400
E	43,484.56	Reaming:	
Elev:	1,556.17	Casing:	
Drilled By:	Putnam Drlg. Co.	Cement:	
Logged By:	Hill & Fischer	Overburden:	89'

Results

Top Of:	Zinc Mineralization	Pyrite Mineralization
Mascot		
Kingsport (CMss)		Shine @ 279, 286
"R" bed	279	
"S" bed		
Longview ("T" bed)	372	

Summary of Hole CO-1

PUNCHEON CREEK PROJECT

DMEA Contract with National Lead Company

Hole No.	CO-1	Collared:	8-30-57
Farm:	D. Coffman	Bottomed:	9-21-57
Loc: N		Depth:	961
E		Reaming:	None
Elev:		Casing:	BX-10; AX-37'
Contractor:	Joy Mfg. Company	Cement:	None
Logged By:	Spears & Hill	Overburden:	9'

Results

Top Of:	Zinc Mineralization	Pyrite Mineralization
Mascot		
Kingsport (CMss)	661	928-929, 1' @ 10% est. 951½-952½, 1' @ 2% est.
"R" bed	853	
"S" bed	905	
Longview("T"bed)	939	

Summary of Hole CO-2

PUNCHEON CREEK PROJECT

DMEA Contract with National Lead Company

Hole No.	CO-2	Collared:	9-23-57
Farm:	D. Coffman	Bottomed:	10-8-57
Loc: N	47,546.18	Depth:	854
E	43,400.85	Reaming:	None
Elev:	1,402.85	Casing:	BX-16, AX-21
Contractor:	Joy Mfg. Company	Cement:	None
Logged By:	J. W. Spears	Overburden:	16'

Results

Top Of:		Zinc Mineralization	Pyrite Mineralization
Mascot			
Kingsport (CMss)	566		Shines @ 33,233,389-392, 469,768-772
"R" bed	728		801½-802½, 1' @ 2% est. Shines @ 812, 844
"S" bed	785		
Longview ("T"bed)	832		

Summary of Hole CO-3

PUNCHEON CREEK PROJECT

DMEA Contract with National Lead Company

Hole No.	CO-3	Collared:	10-10-57
Farm:	D. Coffman	Bottomed:	10-25-57
Loc: N	47,876.47	Depth:	617
E	43,176.46	Reaming:	44'
Elev:	1,454.16	Casing:	BX-26, AX-100
Contractor:	Joy Mfg. Company	Cement:	None
Logged By:	J. W. Spears	Overburden:	26'

Results

Top Of:		Zinc Mineralization	Pyrite Mineralization
Mascot			
Kingsport (CMss)	323		479-482, 3' @ 2% est. 485-489, 4' @ 1% est.
"R" bed	499		494½-498, 3½' @ 1% est. Shines @ 502,510,513, 515-516, 1'@ 3% est;
"S" bed	532		Shines @ 550-552, 582-584, 2' @ 2% est.
Longview ("T"bed)	599		590-591, 1' @ 3% est.

Summary of Hole CO-4

PUNCHEON CREEK PROJECT

DMEA Contract with National Lead Company

Hole No.	CO-4	Collared:	10-26-57
Farm:	D. Coffman	Bottomed:	11-12-57
Loc: N	47,711.17	Depth:	754
E	43,287.61	Reaming:	None
Elev:	1,440.57	Casing:	BX-18; AX-31½
Contractor:	Joy Mfg. Company	Cement:	None
Logged By:	J. W. Spears	Overburden:	18'

Results

Top Of:		Zinc Mineralization	Pyrite Mineralization
Mascot			
Kingsport (CMss)	469		Shines 354,358-359, 411-411½, 554-554½,617½
"R" bed	638		622½-629, 6½'@ ½% est. 652-657, shines, 686-687, 1' @ 3% est.
"S" bed	677		Shines @ 691,701,704,707, 715,737,742½-753,10½' @ ½% est.
Longview ("T"bed)	729		

Summary of Hole CO-5

PUNCHEON CREEK PROJECT

DMEA Contract with National Lead Company

Hole No.	CO-5	Collared:	11-15-57
Farm:	D. Coffman	Bottomed:	11-27-57
Loc: N	48,040.81	Depth:	490
E	43,058.72	Reaming:	None
Elev:	1,483.11	Casing:	BX-62; AX-80
Contractor:	Joy Mfg. Company	Cement:	None
Logged By:	J. W. Spears	Overburden:	62'

Results

Top Of:	Zinc Mineralization	Pyrite Mineralization
Mascot		
Kingsport (CMss)	224	Shines @ 101, 111 419½-421, 1½' @ 2% est. 432-433, 1' @ 4% est. 444-445, 1' @ 2% est.
"R" Bed	367	
"S" bed	419	
Longview ("T"bed)	468	

Summary of Hole CO-6

PUNCHEON CREEK PROJECT

DMEA Contract with National Lead Company

Hole No.	CO-6	Collared:	11-21-57
Farm:	D. Coffman	Bottomed:	11-27-57
Loc: N	48,202.00	Depth:	397
E	42,941.25	Reaming:	None
Elev:	1,534.55	Casing:	BX-87, AX-98
Contractor:	Joy Mfg. Company	Cement:	None
Logged By:	J. W. Spears	Overburden:	87'

Results

Top Of:		Zinc Mineralization	Pyrite Mineralization
Mascot			
Kingsport (CMss)	97	283-289, 6' shines	300-301, 1' @ 4% est. 311-315, 4' @ 3% est.
"R" bed	271		Shines 320,322,326,330 332-333, 1' @ 1% est.
"S" bed	328		338-339, 1' @ 4% Est. Shines @ 342, 345
Longview ("T"bed)	385		347-350, 3' @ 3% est. 352-354½, 2½' @ 3% est. 364-366, 2= @ 3% est.

Summary of Hole CO-7

PUNCHEON CREEK PROJECT

DMEA Contract with National Lead Company

Hole No.	CO-7	Collared:	12-2-57
Farm:	D. Coffman	Bottomed:	12-6-57
Loc: N	48,372.80	Depth:	260
E	42,824.59	Reaming:	None
Elev:	1,571.92	Casing:	BX-80, AX-99
Contractor:	Joy Mfg. Company	Cement:	None
Logged By:	J. W. Spears	Overburden:	80'

Results

Top Of:	Zinc Mineralization	Pyrite Mineralization
Mascot		
Kingsport (CMss)		
"R" bed	132	
"S" bed	187	
Longview ("T"bed)	238	

Summary of Hole DA-1

PUNCHEON CREEK PROJECT

DMEA Contract with National Lead Company

Hole No.	DA-1	Collared:	12-2-57
Farm:	W. B. Dalton	Bottomed:	12-20-57
Loc: N	48,469.19	Depth:	872
E	44,894.01	Reaming:	None
Elev:	1,403.44	Casing:	BX-47, AX-60
Contractor:	Joy Mfg. Company	Cement:	None
Logged By:	J. W. Spears	Overburden:	47'

Results

Top Of:		Zinc Mineralization	Pyrite Mineralization
Maacot			
Kingsport (CMss)	545	Shine @ 666 833-835½,2½' @ ¼% est.	431-435, 4' @ 1% est. Shine 510,528,531,596-598
"R" bed	739	836½-838,1½'@ ½% est.	608,612-618,6'@ 1% est, 623-629,6' @ ½% est.
"S" bed	796		Shine 631-639 649-655, 6' @ 2% est.
Longview ("T" bed)	825		658-663, 5' @ 2% est. 667½-672,4½' @ 1½% est. 677½-688½, 11' @ 2½%est. Shines @ 689,692,695 698,699,702,718-719, 723-725, 2' @ 1% est. Shines @ 732,736,737,755, 757,758

Summary of Hole DA-2

PUNCHEON CREEK PROJECT

DMEA Contract with National Lead Company

Hole No.	DA-2	Collared:	12-21-57
Farm:	W. B. Dalton	Bottomed:	1-8-58
Loc: N	48,645.50	Depth:	715
E	44,795.88	Reaming:	None
Elev:	1,409.90	Casing:	BX-44, AX-70
Contractor:	Joy Mfg. Company	Cement:	None
Logged By:	J. W. Spears	Overburden:	44

Results

Top Of:		Zinc Mineralization	Pyrite Mineralization
Mascot			
Kingsport (CMss)	401	Shine @ 313, 491	Shine @ 323,389,481,528 532,537,551,552,566,567 626,637
"R" bed	580		
"S" bed	643		
Longview ("T" bed)	679		

Summary of Hole DAL-1

PUNCHEON CREEK PROJECT

DMEA Contract with B. H. Putnam, Operator

Hole No.	DAL-1	Collared:	2-11-59
Farm:	W. B. Dalton	Bottomed:	2-19-59
Loc: N	49,507.78	Depth:	410
E	45,739.34	Reaming:	None
Elev:	1,495.83	Casing:	BX-77; AX-122
Drilled By:	Putnam Drlg. Co.	Cement:	None
Logged By:	W. Hill	Overburden:	77'

Results

Top Of:		Zinc Mineralization	Pyrite Mineralization
Mascot			
Kingsport (CMss)	131		
"R" bed	303		
"S" bed	365		
Longview ("T" bed)	396		

Summary of Hole DJ-1

PUNCHEON CREEK PROJECT

DMEA Contract with B. H. Putnam, Operator

Hole No.	DJ-1	Collared:	2-4-60
Farm:	Dave Jackson	Bottomed:	2-9-60
Loc: N	51,256.54	Depth:	300'
E	48,417.58	Reaming:	55-65
Elev:	1,486.30	Casing:	BX-35; AX-65
Contractor:	Putnam Drlg. Co.	Cement:	None
Logged By:	F. T. Fischer	Overburden:	35'

Results

Top Of:		Zinc Mineralization	Pyrite Mineralization
Mascot			
Kingsport (CMss)		Trace @ 61 66-68,2' @ 2.3%	Shine @ 118,189,276, 278½-279
"R" bed	153	Shine 86,89,93,95 101-127,26'@ 0.55%	
"S" bed	215	129-129½,½'@ 6% est. Trace @ 278	
Longview("T" bed)	245		

Summary of Hole DJ-2

PUNCHEON CREEK PROJECT

DMEA Contract with B. H. Putnam, Operator

Hole No.	DJ-2	Collared:	2-18-60
Farm:	Dave Jackson	Bottomed:	2-22-60
Loc: N	51,347.46	Depth:	220
E	48,462.98	Reaming:	None
Elev:	1,494.06	Casing:	BX-93, AX-120
Contractor:	Putnam Drlg. Co.	Cement:	None
Logged By:	F. T. Fischer	Overburden:	93'

Results

Top Of:		Zinc Mineralization	Pyrite Mineralization
Mascot			
Kingsport (CMss)			Traces @ 158, 159
"R" bed	103		
"S" bed	159		
Longview ("T" bed)	190		

Summary of Hole DJ-3

PUNCHEON CREEK PROJECT

DMEA Contract with B. H. Putnam, Operator

Hole No.	DJ-3	Collared:	2-23-60
Farm:	Dave Jackson	Bottomed:	2-26-60
Loc: N	51,267.87	Depth:	331
E	48,688.99	Reaming:	None
Elev:	1,486.89	Casing:	BX-87, AX-100
Contractor:	Putnam Drlg. Co.	Cement:	None
Logged By:	F. T. Fischer	Overburden:	85

Results

Top Of:		Zinc Mineralization	Pyrite Mineralization
Mascot			
Kingsport (CMss)		151½-153,1½' @ 2% est. Shine @ 154½,155	Shine @ 203,240½, 242½-243½, 1' @ 4% est.
"R" bed	216		245-246,1' @ 2% est. 249-249½, ½' @ 5% est.
"S" bed	274		253-255, 2' @ 3½% est. Shine @ 267, 269½
Longview ("T" bed)	313		272½-273½,1' @ 2% est. Shines 330'-331

Summary of Hole DJ-4

PUNCHEON CREEK PROJECT

DMEA Contract with B. H. Putnam, Operator

Hole No.	DJ-4	Collared:	2-29-60
Farm:	Dave Jackson	Bottomed:	3-8-60
Loc: N	51,091.72	Depth:	450
E	48,782.32	Reaming:	77-105
Elev:	1,469.01	Casing:	BX-105, AX-110
Contractor:	Putnam Drlg. Co.	Cement:	None
Logged By:	F. T. Fischer	Overburden:	95'

Results

Top Of:		Zinc Mineralization	Pyrite Mineralization
Mascot			
Kingsport (CMss)	174		
"R" bed	355		
"S" bed	405		
Longview ("T" bed)	444		

Summary of Hole GD-1

PUNCHEON CREEK PROJECT

DMEA Contract with National Lead Company

Hole No.	GD-1	Collared:	1-29-58
Farm:	Green - Dalton	Bottomed:	2-13-58
Loc: N	49,587.95	Depth:	625
E	46,686.03	Reaming:	None
Elev:	1,388.65	Casing:	BX-7, AX-20
Contractor:	Joy Mfg. Company	Cement:	None
Logged By:	J. W. Spears	Overburden:	7'

Results

Top Of:		Zinc Mineralization	Pyrite Mineralization
Mascot			
Kingsport (CMss)	326	Traces @ 487,491,493 498,512,523-525,	Shines @ 477,482,483, 542,618
"R" bed	497	538	
"S" bed	560		
Longview ("T"bed)	595		

Summary of Hole GD-2

PUNCHEON CREEK PROJECT

DMEA Contract with National Lead Company

Hole No.	GD-2	Collared:	2-15-58
Farm:	Green - Dalton	Bottomed:	3-3-58
Loc: N	49,760.56	Depth:	534
E	46,586.16	Reaming:	20' 75-95
Elev:	1,402.37	Casing:	BX-65, AX-75
Contractor:	Joy Mfg. Company	Cement:	Total hole
Logged By:	J. W. Spears	Overburden:	65

Results

Top Of:		Zinc Mineralization	Pyrite Mineralization
Mascot			
Kingsport (CMss)	190	408½-410½,2'@ 1% est. 419-419½,½'@ 2% est.	
"R" bed	357	426-427½,1½'@ 1½% est. Shines @ 429, 432	
"S" bed	424	434-454, 20'@ 3.6% 434-470½,36½'@ 2.9%	
Longview ("T" bed)	475	Traces @ 478, 488, 491-491½, ½' shines, 495-496, 1' @ 2.46% Shines @ 502,505½-510½, 515-520, 5'@ 2.95%	

Summary of Hole GD-3

PUNCHEON CREEK PROJECT

DMEA Contract with B. H. Putnam, Operator

Hole No.	GD-3	Collared:	4-8-58
Farm:	Green-Dalton	Bottomed:	4-11-58
Loc: N	49,935.51	Depth:	364
E	46,490.16	Reaming:	None
Elev:	1,403.48	Casing:	BX-49, AX-68
Contractor:	Putnam Drlg. Company	Cement:	None
Logged By:	J. W. Spears	Overburden:	49'

Results

Top Of:		Zinc Mineralization	Pyrite Mineralization
Mascot			
Kingsport (CMss)	30'?	245½-252,6½'@ 1.76% Shines 262-263	246-251, 5' @ 2% est. Shines @ 256
"R" bed	192		262-263, 1' @ 10% est.
"S" bed	258		
Longview ("T" bed)	307		

Summary of Hole GD-4

PUNCHEON CREEK PROJECT

DMEA Contract with B. H. Putnam, Operator

Hole No.	GD-4	Collared:	5-8-58
Farm:	Green - Dalton	Bottomed:	5-12-58
Loc: N	49,852.24	Depth:	433
E	46,537.87	Reaming:	38'
Elev:	1,401.13	Casing:	BX-51, AX-110
Contractor:	Putnam Drlg. Company	Cement:	None
Logged By:	J. W. Spears	Overburden:	- 51

Results

Top Of:		Zinc Mineralization	Pyrite Mineralization
Mascot			
Kingsport (CMss)	129 ?	294½-309½,13'@ 1.07% 419-421,2'@ 6.86%	Shines 277,287,305-307, 315-322
"R" bed	254		
"S" bed	323		
Longview ("T" bed)	368		

Summary of Hole GD-5

PUNCHEON CREEK PROJECT

DMEA Contract with B. H. Putnam, Operator

Hole No.	GD-5	Collared:	5-13-58
Farm:	Green - Dalton	Bottomed:	5-17-58
Loc: N	49,678.25	Depth:	586
E	46,633.44	Reaming:	None
Elev:	1,391.48	Casing:	BX-19, AX-39
Contractor:	Putnam Drlg. Company	Cement:	None
Logged By:	J. W. Spears	Overburden:	19'

Results

Top Of:		Zinc Mineralization	Pyrite Mineralization
Mascot			
Kingsport (CMss)	258	485½-487,1½'@ 2% est. 497-513½,16½'@ 2.26%	Shines @ 481,492-511,521
"R" bed	420		
"S" bed	486		
Longview ("T"bed)	533		

Summary of Hole GD-6

PUNCHEON CREEK PROJECT

DMEA Contract with B. H. Putnam, Operator

Hole No.	GD-6	Collared:	5-18-58
Farm:	Green - Dalton	Bottomed:	5-24-58
Loc: N	49,674.52	Depth:	553
E	46,536.84	Reaming:	77-102
Elev:	1,403.15	Casing:	BX-49, AX-77
Contractor:	Putnam Drlg. Company	Cement:	None
Logged By:	J. W. Spears	Overburden:	49'

Results

Top Of:		Zinc Mineralization	Pyrite Mineralization
Mascot			
Kingsport (CMss)	226	Shine @ 412,427,440 446,448,449	Shines @ 393,413,434, 445,447,507-508,519, 535-545
"R" bed	386	426½-427½,1'@ 3% Trace @ 435½,437½	
"S" bed	455		
Longview ("T" bed)	495		

Summary of Hole GD-7

PUNCHEON CREEK PROJECT

DMEA Contract with B. H. Putnam, Operator

Hole No.	GD-7	Collared:	5-24-58
Farm:	Green - Dalton	Bottomed:	5-29-58
Loc: N	49,762.11	Depth:	557
E	46,489.67	Reaming:	76-116½
Elev:	1,414.86	Casing:	BX-70, AX-76
Contractor:	Putnam Drlg. Company	Cement:	None
Logged By:	J. W. Spears	Overburden:	70'

Results

Top Of:		Zinc Mineralization	Pyrite Mineralization
Mascot			
Kingsport (CMss)	162	336½-337½,1'@ 3%est. Shines @343,365,375	Shines @ 329,338-339, 351,392,399-400,1'@ 5% Shine @ 492
"R" bed	323	399-400,1'@1½%est. 459-459½,½'@ 3% est.	421-424,424-427½,3½'@ 5% est. 531½-546,15½'@ 4% est.
"S" bed	403	Shines @ 370-371,378 379,481	
Longview ("T" bed)	446	487½-489, 1½'@ 3% est. Shines 493,494,503, 507½-517,9½'@ 2.71% Shines @ 521, 523 524½-527½, 3'@ 1½% est.	

Summary of Hole GD-7A

PUNCHEON CREEK PROJECT

DMEA Contract with B. H. Putnam, Operator

Hole No.	GD-7A	Collared:	5-29-58
Farm:	Green - Dalton	Bottomed:	6-2-58
Loc: N	49,751.91	Depth:	541
E	46,497.31	Reaming:	None
Elev:	1,414.28	Casing:	BX-70, AX-124
Contractor:	Putnam Drlg. Company	Cement:	3 bags
Logged By:	J. W. Spears	Overburden:	70'

Results

Top Of:		Zinc Mineralization	Pyrite Mineralization
Mascot			
Kingsport (CMss)	157	Shine @ 297,299,300-301,303-307,4'@0.94	Shines 320,323,330,334 342,346,349,356,359, 362-375,501,503,508
"R" bed	310	310½-314-3½'@1.01%, 314-319,5' @ 2.04%,	
"S" bed	377	Shine @ 322,323, 325½-334,9½' @ 1.7%	
Longview ("T"bed)	416	Shine @ 337,338,340, 341-342½,356-364½, 8½'@ 1.31%,shines @ 366½,367½,376,379, 381-394,13'@ 1.19% Shines 395,397, 402-403,1'@ 1.88%, 407½-409,1½'@ 2.70%, 422-424, 2' shines, Shines 428,431,433, 437½-441,3½' @ 1.3% Shines @ 448,452,455, 466½-470, 3½' @ 2.02% Shines @ 487,489,508	

Summary of Hole GD-8

PUNCHEON CREEK PROJECT

DMEA Contract with B. H. Putnam, Operator

Hole No.	GD-8	Collared:	6-3-58
Farm:	Green-Dalton	Bottomed:	6-6-58
Loc: N	49,842.05	Depth:	400
E	46,429.37	Reaming:	None
Elev:	1,408.53	Casing:	BX-71, AX-86
Contractor:	Putnam Drlg. Company	Cement:	None
Logged By:	J. W. Spears	Overburden:	71'

Results:

Top Of:		Zinc Mineralization	Pyrite Mineralization
Mascot			
Kingsport (CMss)		Traces @ 274,280 286, 288, 322	Trace @ 234
"R" bed	224		
"S" bed	283		
Longview ("T"bed)	347		

Summary of Hole GD-9

PUNCHEON CREEK PROJECT

DMEA Contract with B. H. Putnam, Operator

Hole No.	GD-9	Collared:	6-6-58
Farm:	Green - Dalton	Bottomed:	6-12-58
Loc: N	49,759.03	Depth:	544
E	46,686.26	Reaming:	39 - 151
Elev:	1,374.44	Casing:	BX-17, AX-151
Contractor:	Putnam Drlg. Company	Cement:	None
Logged By:	J. W. Spears	Overburden:	17'

Results

Top Of:		Zinc Mineralization	Pyrite Mineralization
Mascot			
Kingsport (CMss)	200	Trace @ 319 416½-417,½'@ 1% est.	410-411, Shines Shines 415-416,
"R" bed	363	Shine @ 418,425½, 429-443, 14'@ 1.33%	429-432½,3½' @ 3% est. 435-439, 4' @ 1% est.
"S" bed	440	510½-511½,1'@ 3/4%	441-403-2' @ 3% est. 510½-511½, shines
Longview ("T" bed)	489		

Summary of Hole GD-10

PUNCHEON CREEK PROJECT

DMEA Contract with B. H. Putnam, Operator

Hole No.	GD-10	Collared:	6-16-58
Farm:	Green - Dalton	Bottomed:	6-21-58
Loc: N	49,673.62	Depth:	630
E	46,737.10	Reaming:	72-120
Elev:	1,378.36	Casing:	BX-38, AX-72
Contractor:	Putnam Drlg. Company	Cement:	3 Bags
Logged By:	J. W. Spears	Overburden:	38'

Results

Top Of:		Zinc Mineralization	Pyrite Mineralization
Mascot			
Kingsport (CMss)	282	Trace @ 456, 490½-502½,12' @ 2.18%	Shine 485,506-508, 516-519, 603,606
"R" bed	447	490½-508,17½' @ 1.9% 508½-509, ½' @ 0.72%	
"S" bed	513	579½-601,21½' @ 0.5%	
Longview ("T"bed)	559		

Summary of Hole GD-11

PUNCHEON CREEK PROJECT

DMEA Contract with B. H. Putnam, Operator

Hole No.	GD-11	Collared:	6-23-58
Farm:	Green - Dalton	Bottomed:	7-1-58
Loc: N	49,586.61	Depth:	679
E	46,785.72	Reaming:	None
Elev.	1,386.53		
Contractor:	Putnam Drlg. Company	Casing:	BX-24, AX-45
Logged By:	J. W. Spears	Overburden:	24'

Results

Top Of:		Zinc Mineralization	Pyrite Mineralization
Mascot			
Kingsport (CMss)	353	Shine 438-348½,465 490-492,494,450-452	Shine @ 494 517-518,1'@ 1% est. 537-539½,2½'@ 5% est.
"R" bed	510	416-418½,1½'@ 3%est.	556-558, shines
"S" bed	564	Shine 531,546½-549½, 576-576½ @ 2% est.	Shines @ 569, 576
Longview ("T"bed)	611	Shine @ 608½	

Summary of Hole GD-12

PUNCHEON CREEK PROJECT

DMEA Contract with B. H. Putnam, Operator

Hole No.	GD-12	Collared:	8-20-58
Farm:	Green - Dalton	Bottomed:	8-27-58
Loc: N	49,846.84	Depth:	460
E	46,634.33	Reaming:	None
Elev:	1,390.85	Casing:	BX-44, AX-103
Contractor:	Putnam Drlg. Company	Overburden:	44'
Logged By:	J. W. Spears		

Results

Top Of:		Zinc Mineralization	Pyrite Mineralization
Mascot			
Kingsport (CMss)	128	Shine @ 440½ 441-449,8' @ 1.93%	
"R" bed	277		
"S" bed	336		
Longview ("T"bed)	391		

Summary of Hole GD-13

PUNCHEON CREEK PROJECT

DMEA Contract with B. H. Putnam, Operator

Hole No.	GD-13	Collared:	8-29-58
Farm:	Green - Dalton	Bottomed:	9-6-58
Loc: N	50,009.99	Depth:	423
E	46,743.83	Reaming:	None
Elev:	1,413.18	Casing:	BX-29, AX-123
Contractor:	Putnam Drlg. Company	Cement:	None
Logged By:	J. W. Spears	Overburden:	29'

Results

Top Of:		Zinc Mineralization	Pyrite Mineralization
Mascot			
Kingsport(Mss)	87		Shines @ 281, 284
"R" bed	240		
"S" bed	296		
Longview ("T"bed)	359		

Summary of Hole GD-14

PUNCHEON CREEK PROJECT

DMEA Contract with B. H. Putnam, Operator

Hole No.	GD-14	Collared:	9-9-58
Farm:	Green - Dalton	Bottomed:	9-18-58
Loc: N	49,766.78	Depth:	505
E	46,388.74	Reaming:	None
Elev:	1,425.47	Casing:	BX-82, AX-100
Contractor:	Putnam Drlg. Company	Cement:	None
Logged By:	J. W. Spears	Overburden:	82'

Results

Top Of:		Zinc Mineralization	Pyrite Mineralization
Mascot			
Kingsport (CMss)	122	Shine @ 284½,288½ 293,298	Shines @ 258-271,289,302 305-307,311-313,351
"R" bed	280	301½-308½,7'@ 1.26% Shine @ 343½	
"S" bed	360	346½-352,5½'@ 3.5% 365-373,8'@ 3.52%	
Longview ("T"bed)	413	378½-384,5½'@ 1.64% 395-401½,6½'@ 0.67% 409-410,1' @ 1.44%	

Summary of Hole GD-15

PUNCHEON CREEK PROJECT

DMEA Contract with B. H. Putnam, Operator

Hole No.	GD-15	Collared:	9-23-58
Farm:	Green - Dalton	Bottomed:	10-2-58
Loc: N	49,675.76	Depth:	513
E	46,337.98	Reaming:	35'
Elev:	1,430.21	Casing:	BX-67, AX-135
Contractor:	Putnam Drlg. Company	Cement:	None
Logged By:	J. W. Spears	Overburden:	67'

Results

Top Of:		Zinc Mineralization	Pyrite Mineralization
Mascot			
Kingsport (CMss)	176	Trace 172,221,270	332-335, 3' @ 1% est.
		Shines 314-317,	335-338,3' @ 2% est.
"R" bed	348	324-324½, 327-328,	342-345,3' @ 2% est.
		330-330½, 368	345-348,3' @ ½% est.
"S" bed	417	408½-419½,11'@1.02%	353-359,6'@ 2% est.
		425½,427½,2'@ 0.72%	364-366,2' @ 2% est.
			368-369,1' @ 1% est.
Longview ("T"bed)	451	Trace @ 501	373-373½,½'@ 3% est.
			Shines @ 476,477,478,479
			488

Summary of Hole GD-16

PUNCHEON CREEK PROJECT

DMEA Contract with B. H. Putnam, Operator

Hole No.	GD-16	Collared:	10-4-58
Farm:	Green - Dalton	Bottomed:	10-18-58
Loc: N	49,503.81	Depth:	553
E	46,237.38	Reaming:	None
Elev:	1,407.02	Casing:	BX-80, AX-155
Contractor:	Putnam Drlg. Company	Cement:	None
Logged By:	J. W. Spears	Overburden:	80'

Results

Top Of:		Zinc Mineralization	Pyrite Mineralization
Mascot			
Kingsport (CMss)	220	Shines @ 230½,233 234½-239½,5'@ 1.59%	Traces 243-259,292-295, 298-322
"R" bed	418	Shine @ 243½ 245-254,9'@ 2.47%	
"S" bed	499	261-267,6' @ 0.78% 269-277½,8½'@ 2.40%	
Longview ("T" bed)	524	281-282, 1' @ 3.30% Shine @ 285,291,292 305,306,308-310,2'@ 1.06%, Shines @ 311½, 314,315½,316½, 318,319-321, 2'@ 1.22%, Shines @ 325½-326,331,332½, 337½,369,533	

Summary of Hole GD-17

PUNCHEON CREEK PROJECT

DMEA Contract with B. H. Putnam, Operator

Hole No.	GD-17	Collared:	10-21-58
Farm:	Green - Dalton	Bottomed:	11-7-58
Loc: N	49,328.92	Depth:	595
E	46,130.91	Reaming:	None
Elev:	1,396.12	Casing:	BX-68,AX-120
Drilled By:	Putnam Drlg. Company	Cement:	None
Logged By:	J. W. Spears	Overburden:	68'

Results

Top Of:		Zinc Mineralization	Pyrite Mineralization
Mascot			
Kingsport (CMss)	317		
"R" bed	475		
"S" bed	531		
Longview ("T"bed)	568		

Summary of Hole GD-18

PUNCHEON CREEK PROJECT

DMEA Contract with B. H. Putnam, Operator

Hole No.	GD-18	Collared:	11-8-58
Farm:	Green - Dalton	Bottomed:	11-17-58
Loc: N	49,769.76	Depth:	400
E	46,091.28	Reaming:	None
Elev:	1,473.75	Casing:	BX-70, AX-110
Contractor:	Putnam Drlg. Company	Cement:	2 Bags
Logged By:	J. W. Spears	Overburden:	91'

Results

Top Of:		Zinc Mineralization	Pyrite Mineralization
Mascot			
Kingsport (CMss)		Shines 199-200,203-204 1'@5.36%,shines 205½	Shine @ 245,247,297,298 Traces 331-348,367, 371-380,386,388
"R" bed	223	207,210-215,5'@ 2.19% 219½-232½,13'@ 2.19%	
"S" bed	308	Shines 238,239,241, 243-245,2'@ 3.08%	
Longview ("T"bed)	351	248½-251,1½'@ 0.78%, 257-262½,5½'@ 2.44% 268-268½,½'@ 2.32% 270-306,36'@ 2.93% Traces @ 317,323,328½-329½, 340-344,4'@ 1½% Est. Shine @ 384½	

Summary of Hole GD-19

PUNCHEON CREEK PROJECT

DMEA Contract with B. H. Putnam, Operator

Hole No.	GD-19	Collared:	11-20-58
Farm:	Green - Dalton	Bottomed:	11-26-58
Loc: N	49,851.88	Depth:	264
E	45,938.63	Reaming:	None
Elev:	1,467.21	Casing:	BX-60, AX-110
Contractor:	Putnam Drlg. Company	Cement:	None
Logged By:	W. T. Hill	Overburden:	60'

Results

Top Of:		Zinc Mineralization	Pyrite Mineralization
Mascot			
Kingsport (CMss)		Shines 115-117 118-130,12'@ 1.96%	Shines @ 90,93,97,101,105, 115-130,148-154,167-179,
"R" bed	116	Shines @ 173,178 183-184,1'@ .88%	183-184,5% est,220-221, 222-223
"S" bed	188	Shines 185,188,189,191	
Longview ("T"bed)	230		

Summary of Hole GD-20

PUNCHEON CREEK PROJECT

DMEA Contract with B. H. Putnam, Operator

Hole No.	GD-20	Collared:	12-1-58
Farm:	Green - Dalton	Bottomed:	12-9-58
Loca N	49,765.02	Depth:	310
E	45,889.46	Reaming:	31
Elev:	1,488.46	Casing:	BX-58, AX-131
Contractor:	Putnam Drlg. Company	Cement:	None
Logged By:	W. T. Hill	Overburden:	58

Results

Top Of:		Zinc Mineralization	Pyrite Mineralization
Mascot			
Kingsport (CMss)		204-206,2'@ 7.04% Shines 216-219	Shine @ 233-237 255-257,2' @ 1% est.
"R" bed	158	222½-226,3½'@ 1.25% 238½-239½,1'@ 5.0%	Shines @ 293-296
"S" bed	223	242½-243½,1'@ 3/4% 254½-256½,2'@ 1.36%	
Longview ("T"bed)	274	Shine @ 261,296,299	

Summary of Hole GD-21

PUNCHEON CREEK PROJECT

DMEA Contract with B. H. Putnam, Operator

Hole No.	GD-21	Collared:	12-10-58
Farm:	Green - Dalton	Bottomed:	12-23-58
Loc: N	49,680.01	Depth:	365
E	45,837.82	Reaming:	None
Elev:	1,497.76	Casing:	70 BX, 110 AX
Contractor:	Putnam Drlg. Company	Cement:	None
Logged By:	W. T. Hill	Overburden:	70'

Results

Top Of:		Zinc Mineralization	Pyrite Mineralization
Mascot			
Kingsport (CMss)			
"R" bed	210		
"S" bed	298		
Longview ("T" bed)	328		

Summary of Hole GD-22

PUNCHEON CREEK PROJECT

DMEA Contract with B. H. Putnam, Operator

Hole No.	GD-22	Collared:	1-14-59
Farm:	Green - Dalton	Bottomed:	1-24-59
Loc: N	49,854.49	Depth:	315
E	46,043.65	Reaming:	None
Elev:	1,467.29	Casing:	BX-62, AX-98
Contractor:	Putnam Drlg. Company	Cement:	None
Logged By:	W. T. Hill	Overburden:	62

Results

Top Of:		Zinc Mineralization	Pyrite Mineralization
Mascot			
Kingsport (CMss)		143 -155½,12½'@ 2.4% 155½-158,2½'@ 1.3%	
"R" bed	130	Shine 190,200½-201, 213-233,20'@ 1.74%	
"S" bed	215		
Longview ("T"bed)	258		
"L-4" bed	301		

Summary of Hole GD-23

PUNCHEON CREEK PROJECT

DMEA Contract with B. H. Putnam, Operator

Hole No.	GD-23	Collared:	1-25-59
Farm:	Green - Dalton	Bottomed:	1-30-59
Loc: N	49,680.73	Depth:	410'
E	46,138.93	Reaming:	No Record
Elev:	1,459.66	Casing:	No Record
Contractor:	Putnam Drlg. Co.	Cement:	3 Bags
Logged By:	W. T. Hill	Overburden:	65

Results

Top Of:		Zinc Mineralization	Pyrite Mineralization
Mascot			
Kingsport (CMss)	124	241½-251,9½' @ 3.07% Shines @ 255, 258	
"R" Bed	277	263-267, 4'@ 1.49% Shine @ 274	
"S" Bed	343	276-277, 1' @ 2% Est. Shine 281, 282,	
Longview ("T"bed)	378	284½-285, ½'@ ½% Est. 320-333½,13½'@ 4.19% 333½-336,2½'@ Shines 340-344½,4½'@ 1% Est. 348½-349½,1' @ 1.72% 356-358, 2' @ 2.98% Shines @ 362, 363, 369-370, 1'@ 2% Est.	

Summary of Hole GD-24

PUNCHEON CREEK PROJECT

DMEA Contract with B. H. Putnam, Operator

Hole No.	GD-24	Collared:	2-27-59
Farm:	Green - Dalton	Bottomed:	3-10-59
Loc: N	49,592.43	Depth:	501
E	46,186.29	Reaming:	20'
Elev:	1,438.35	Casing:	BX-70; AX-120
Contractor:	Putnam Drlg. Co.	Cement:	2 Bags
Logged By:	W. Hill	Overburden:	65'

Results

Top Of:		Zinc Mineralization	Pyrite Mineralization
Mascot			
Kingsport (CMss)	176	Traces 200-201, 290-291, Shines	
"R" bed	338	296-313½,17½'@ 1% Est. Traces @ 316,325,328,	
"S" bed	409	333-335,2'@ 2% est. 338-348,10'@ 2% Est.	
Longview ("T"bed)	450	356-365,9'@ 2.6% Shine @ 378 386-387, 1' @ 4% Est. Shine @ 391	

Summary of Hole GD-25

PUNCHEON CREEK PROJECT

DMEA Contract with B. H. Putnam, Operator

Hole No.	GD-25	Collared:	3-6-59
Farm:	Green - Dalton	Bottomed:	3-17-59
Loc: N	49,622.35	Depth:	703
E	46,981.96	Reaming:	35-155
Elev:	1,390.82	Casing:	BX-55',AX-155'
Contractor:	Putnam Drlg. Co.	Cement:	None
Logged By:	W. T. Hill	Overburden:	25'

Results

Top Of:		Zinc Mineralization	Pyrite Mineralization
Mascot			
Kingsport (CMss)	420		
"R" bed	574		
"S" bed	639		
Longview ("T"bed)			

Summary of Hole GD-26

PUNCHEON CREEK PROJECT

DMEA Contract with B. H. Putnam, Operator

Hole No.	GD-26	Collared:	3-29-59
Farm:	Green - Dalton	Bottomed:	4-9-59
Loc: N	49,538.57	Depth:	760
E	46,929.38	Reaming:	None
Elev:	1,379.54	Casing:	BX-17, AX-100
Contractor:	Putnam Drlg. Co.	Cement:	2 Bags
Logged By:	W. T. Hill	Overburden:	17'

Results

Top Of:		Zinc Mineralization	Pyrite Mineralization
Mascot			
Kingsport (CMss)	442	665-674,9'@ 5.06% 665-688,23'@ 2.43%	
"R" bed	596	Shine @ 700	
"S" bed	652		
Longview ("T"bed)	708		

Summary of Hole GD-27

PUNCHEON CREEK PROJECT

DMEA Contract with B. H. Putnam, Operator

Hole No.	GD-27	Collared:	4-10-59
Farm:	Green - Dalton	Bottomed:	4-22-59
Loc: N	49,448.33	Depth:	770
E	46,879.97	Reaming:	45 - 165
Elev:	1,376.68	Casing:	BX-10, AX-165
Contractor:	Putnam Drlg. Co.	Cement:	None
Logged By:	W. T. Hill	Overburden:	11

Results

Top Of:		Zinc Mineralization	Pyrite Mineralization
Mascot			
Kingsport (CMss)	479	706-707½,1½'@3.2%	
"R" bed	636		
"S" bed	690		
Longview ("T"bed)	741		

Summary of Hole GD-28

PUNCHEON CREEK PROJECT

DMEA Contract with B. H. Putnam, Operator

Hole No.	GD-28	Collared:	4-25-59
Farm:	Green - Dalton	Bottomed:	5-7-59
Loc: N	49,344.80	Depth:	781
E	46,626.50	Reaming:	60-130
Elev:	1,398.47	Casing:	BX-48, AX-130
Contractor:	Putnam Drlg. Co.	Cement:	None
Logged By:	W. T. Hill	Overburden:	50'

Results

Top Of:		Zinc Mineralization	Pyrite Mineralization
Mascot			
Kingsport (CMss)	486		
"R" bed	646		
"S" bed	697		
Longview ("T" bed)	762		

Summary of Hole GD-29

PUNCHEON CREEK PROJECT

DMEA Contract with B. H. Putnam, Operator

Hole No.	GD-29	Collared:	5-11-59
Farm:	Green - Dalton	Bottomed:	5-25-59
Loc: N	49,216.19	Depth:	915
E	47,218.58	Reaming:	None
Elev:	1,243.29	Casing:	BX-10; AX-20
Contractor:	Putnam Drlg. Co.	Cement:	One Bag
Logged By:	W. T. Hill	Overburden:	10'

Results

Top Of:		Zinc Mineralization	Pyrite Mineralization
Mascot			
Kingsport (CMss)	622	793-800,7'@ 14.42% (only 1½' recovery)	
"R" bed	761	Shine @ 813	
"S" bed	820		
Longview ("T"bed)	842		

Summary of Hole GD-30

PUNCHEON CREEK PROJECT

DMEA Contract with B. H. Putnam, Operator

Hole No.	GD-30	Collared:	5-27-59
Farm:	Green - Dalton	Bottomed:	6-12-59
Loc: N	49,126.22	Depth:	1000
E	47,169.55	Reaming:	None
Elev:	1,250.03	Casing:	BX-10, AX-30
Contractor:	Putnam Drlg. Co.	Cement:	2 Bags
Logged By:	W. T. Hill	Overburden:	15'

Results

Top Of:		Zinc Mineralization	Pyrite Mineralization
Mascot			
Kingsport (CMss)	676	852-860,8'@ ½% Est. Trace @ 903	Trace @ 959 991-993, 2'@ 4% Est.
"R" bed	848	919½-937½,18'@ 5.88% 968½-970½,2'@ 2.50%	
"S" bed	899		
Longview ("T"bed)	945		

Summary of Hole GD-31

PUNCHEON CREEK PROJECT

DMEA Contract with B. H. Putnam, Operator

Hole No.	GD-31	Collared:	6-12-59
Farm:	Green - Dalton	Bottomed:	6-30-59
Loc: N	49,026.21	Depth:	1067'
E	47,125.46	Reaming:	No Record
Elev:	1,233.87	Casing:	" "
Contractor:	Putnam Drlg. Co.	Cement:	" "
Logged By:	W. T. Hill	Overburden:	10'

Results

Top Of:		Zinc Mineralization	Pyrite Mineralization
Mascot			
Kingsport (CMss)	730	937-937½,½'@ 1% Est. Trace @ 955	Shine @ 427
"R" bed	693	956½-969½,13½@ 1.51% Trace @ 975	
"S" bed	947	985-1005,20'@ 0.89% 1024-1031,7'@ 3.08%	
Longview ("T"bed)	1006	Trace 1038, 1041 1049-1050, 1'@ 1.68%	

Summary of Hole GD-32

PUNCHEON CREEK PROJECT

DMEA Contract with B. H. Putnam, Operator

Hole No.	GD-32	Collared:	7-3-59
Farm:	Green-Dalton	Bottomed:	8-7-59
Loc: N	48,960.21	Depth:	1125
E	47,062.08	Reaming:	None
Elev:	1,242.33	Casing:	BX-10; AX-30'
Contractor:	Putnam Drlg. Co.	Cement:	None -
Logged By:	W. T. Hill	Overburden:	10'

Results

Top Of:		Zinc Mineralization	Pyrite Mineralization
Mascot	27		
Kingsport (CMss)	763	1011-1020,9'@ 1½% Est. 1022½-1023½,1'@3% Est.	1104-1113,9'@ 2% Est.
"R" Bed	935	1034½-1037,2½'@ 2½% Est.	
"S" bed	982		
Longview ("T"bed)	1039		

Summary of Hole GD-33

PUNCHEON CREEK PROJECT

DMEA Contract with B. H. Putnam, Operator

Hole No.	GD-33	Collared:	8-10-59
Farm:	Green - Dalton	Bottomed:	8-26-59
Loc: N	49,131.70	Depth:	864
E	46,442.49	Reaming:	20'
Elev:	1,412.65	Casing:	BX-10; AX-70
Contractor:	Putnam Drlg. Co.	Cement:	None
Logged By:	W. T. Hill	Overburden:	16'

Results

Top Of:		Zinc Mineralization	Pyrite Mineralization
Mascot			
Kingsport (CMss)	562		
"R" bed	730		
"S" bed	787		
Longview ("T"bed)	831		

Summary of Hole GD-34

PUNCHEON CREEK PROJECT

DMEA Contract with B. H. Putnam, Operator

Hole No.	GD-34	Collared:	8-28-59
Farm:	Green - Dalton	Bottomed:	9-15-59
Loc: N	48,879.20	Depth:	1022
E	46,585.64	Reaming:	None
Elev:	1,331.38	Casing:	BX-10; AX-20
Contractor:	Putnam Drlg. Co.	Cement:	None
Logged By:	W. T. Hill & F. T. Fischer		
		Overburden:	11

Results

Top Of:		Zinc Mineralization	Pyrite Mineralization
Mascot			
Kingsport (CMss)	717		Shine @ 935
"R" bed	880		
"S" bed	936		
Longview ("T"bed)	987		

Summary of Hole GD-35

PUNCHEON CREEK PROJECT

DMEA Contract with B. H. Putnam, Operator

Hole No.	GD-35	Collared:	9-17-59
Farm:	Green - Dalton	Bottomed:	10-5-59
Loc. N	49,402.45	Depth:	904
E	47,317.99	Reaming:	None
Elev:	1,311.01	Casing:	BX-5; AX-22
Contractor:	Putnam Drlg. Co.	Cement:	None
Logged By:	F. T. Fischer	Overburden:	12'

Results

Top Of:		Zinc Mineralization	Pyrite Mineralization
Mascot			
Kingsport (CMss)	625	Trace @ 853½,866	Tr @ 284½,294½,310, Shine 353½,354½,488, 551½,809,852
"R" bed	779		
"S" bed	842		
Longview ("T"bed)	887		

Summary of Hole JA-1

PUNCHEON CREEK PROJECT

DMEA Contract with National Lead Company

Hole No.	JA-1	Collared:	12-10-57
Farm:	Elvin Jackson	Bottomed:	1-2-58
Loc: N	46,905 +-	Depth:	836
E	42,362 +-	Reaming:	None
Elev:	1,383 +-	Casing:	BX-27;AX-40
Contractor:	Joy Mfg. Co.	Cement:	None
Logged By:	J. W. Spears	Overburden:	27'

Results

Top Of:		Zinc Mineralization	Pyrite Mineralization
Mascot			
Kingsport (CMss)	545	Trace @ 679, 784	Shine @ 628-629,649, 654,659,661,667-673, 680-684,690-693, 3' @ 3% est. Shines @ 694,697,698,719, 741,751-753
"R" bed	698		
"S" bed	760		
Longview ("T"bed)	815		

Summary of Hole JA-2

PUNCHBON CREEK PROJECT

DMEA Contract with National Lead Company

Hole No.	JA-2	Collared:	1-11-58
Farm:	Elvin Jackson	Bottomed:	1-24-58
Loc: N	47,075.25	Depth:	731
E	42,257.33	Reaming:	None
Elev:	1,410.32	Casing:	BX-27, AX-34
Contractor:	Joy Mfg. Co.	Cement:	None
Logged By:	J. W. Spears	Overburden:	27'

Results

Top Of:		Zinc Mineralization	Pyrite Mineralization
Mascot			
Kingsport (CMss)	435	Shines @ 557,558-559, 580-582,589-591,	Shines @ 321,325,333, 345,347,348,356,357, 384,423,434-435, 443-444, 565-567,2'@ 1% est. Shines @ 569,579,589,593, 613-619,655-659
"R" bed	583	593-595,2'@ 1% est. $631\frac{1}{2}$-633,$1\frac{1}{2}$'@$\frac{1}{4}$% est.	
"S" bed	648		
Longview ("T"bed)	693		

Summary of Hole JA-3

PUNCHEON CREEK PROJECT

DMEA Contract with B. H. Putnam, Operator

Hole No.	JA-3	Collared:	3-26-60
Farm:	Elvin Jackson	Bottomed:	4-6-60
Loc: N	47,313.72	Depth:	600
E	42,081.70	Reaming:	No Record
Elev:	1,454.65	Casing:	
Contractor:	Putnam Drlg. Co.	Cement:	None
Logged By:	Hill & Fischer	Overburden:	73'

Results

Top Of:		Zinc Mineralization	Pyrite Mineralization
Mascot			
Kingsport (CMss)	252	Shine @ 194½,427 449-450,1'@ 4½% est.	Shines 91-93,106-107, 108,123,124½,125, 133-134,157½,231,236, 240,242,243,248,266, 278,317,325½,330,333½, 346,347,352-370½,1% est. 370-413,¼% est. 413-425,¼% est; Shines @ 426,431-440,4% est. 440-442½,5% est. 442-450,1% est. 450-467,3% est. 467-472,3% est.
"R" bed	413		
"S" bed			
Longview ("T"bed)			

Summary of Hole JA-4

PUNCHEON CREEK PROJECT

DMEA Contract with B. H. Putnam, Operator

Hole No.	JA-4	Collared:	4-7-60
Farm:	Elvin Jackson	Bottomed:	4-13-60
Loc: N	47,559.41	Depth:	475
E	41,897.04	Reaming:	No Record
Elev:	1,526.46	Casing:	
Contractor:	Putnam Drlg. Co.	Cement:	
Logged By:	Hill & Fischer	Overburden:	98

Result

Top Of:		Zinc Mineralization	Pyrite Mineralization
Mascot			
Kingsport (CMss)	102	195-196,1'@ 3% est. 205-206,1'@ 3½% est.	157,159,162-164,166,168 173-185, 332,334,
"R" bed	297	211-212,1'@ 1% est. Shine @ 214,	335-336, 1'@ 5% est. 352-355, 3'@ 3½% est.
"S" bed		219-220, 1'@ 3/4%est. Shines 226, 231½	355-359, 4'@ 2-3/4% est. Shines @ 361
Longview ("T"bed)	397	232½, 1'@ 3-3/4%est. Shine @ 236 274-275½,1½'@ 3% est. Shines @ 290,295,297, 315	457-464, 2% est.

Summary of Hole JA-5

PUNCHEON CREEK PROJECT

DMEA Contract with B. H. Putnam, Operator

Hole No.	JA-5	Collared:	4-13-60
Farm:	Elvin Jackson	Bottomed:	4-23-60
Loc: N	47,777.66	Depth:	400
E	42,234.16	Reaming:	No Record
Elev:	1,485.46	Casing:	
Contractor:	E. J. Longyear Co.	Cement:	None
Logged By:	W. Hill	Overburden:	44

Results

Top Of:		Zinc Mineralization	Pyrite Mineralization
Mascot			
Kingsport (CMss)		238-250,12'@ ¼% est. Shines @ 286,303,307 310	249-258, 1% est. Shines 311,318,323, 326-328
"R" bed	278		
"S" bed			
Longview ("T"Bed)			

Summary of Hole JA-6

PUNCHEON CREEK PROJECT

DMEA Contract with B. H. Putnam, Operator

Hole No:	JA-6	Collared:	4-15-60
Farm:	Elvin Jackson	Bottomed:	4-19-60
Loc: N	47,719.23	Depth:	309
E	41,772.98	Reaming:	No Record
Elev:	1,569.44	Casing:	
Contractor:	Putnam Drlg. Co.	Cement:	None
Logged By:	W. Hill	Overburden:	90

Results

Top Of:		Zinc Mineralization	Pyrite Mineralization
Mascot			
Kingsport (CMss)		Shine @ 165	Pbs Shine @ 154 FeS_2 Shines @ 176-181, 199,204
"R" bed	163		
"S" bed			
Longview ("T"bed)	296		

Summary of Hole JA-7

PUNCHEON CREEK PROJECT

DMEA Contract with B. H. Putnam, Operator

Hole No.	JA-7	Collared:	4-20-60
Farm:	Elvin Jackson	Bottomed:	4-25-60
Loc: N	47,480.10	Depth:	450
E	41,958.90	Reaming:	No Record
Elev:	1,499.12	Casing:	
Contractor:	Putnam Drlg. Co.	Cement:	None
Logged By:	W. Hill	Overburden:	50

Results

Top Of:		Zinc Mineralization	Pyrite Mineralization
Mascot			
Kingsport (CMss)	168½	Shine @ 158 241-249,8'@ 12.76%	131-142, 11'@ 1% est. 157-183,26' @ 2% est.
"R" bed	320	241-257,16'@ 6.57% 276-284½,8½'@ 2.02%	Shines @ 189,192,193 197-204,7'@ 2% est.
"S" bed		292-300, 8'@ ½% est. 309½-319,9½' @ 0.79%	348-360,12'@ 1% est. 373-404,31'@ 2% est.
Longview ("T" bed)	409	321-322, 1'@ 1% est. 327-335,8' @ 2½% est.	

Summary of Hole JA-8

PUNCHEON CREEK PROJECT

DMEA Contract with B. H. Putnam, Operator

Hole No.	JA-8	Collared:	4-22-60
Farm:	Elvin Jackson	Bottomed:	4-29-60
Loc: N	47,986.92	Depth:	384
E	42,565.37	Reaming:	No Record
Elev:	1,492.43	Casing:	
Contractor:	E. J. Longyear	Cement:	None
Logged By:	Hill & Fischer	Overburden:	70

Results

Top Of:		Zinc Mineralization	Pyrite Mineralization
Mascot			
Kingsport (CMss)	71 ?		Shines @ 173-174,179,181 195-196,242,248
"R" bed	259		
"S" bed			
Longview ("T"bed)			

Summary of Hole JA-9

PUNCHEON CREEK PROJECT

DMEA Contract with B. H. Putnam, Operator

Hole No.	JA-9	Collared:	4-26-60
Farm:	Elvin Jackson	Bottomed:	5-6-60
Loc: N	47,400.03	Depth:	500
E	42,019.64	Reaming:	No Record
Elev:	1,473.24	Casing:	
Contractor:	Putnam Drlg. Co.	Cement:	None
Logged By:	W. Hill	Overburden:	92'

Results

Top Of:		Zinc Mineralization	Pyrite Mineralization
Mascot			
Kingsport (CMss)	201	Shine @ 183,210	Shines @ 113,124,167, 180, 183,199,202,205, 209-212,5% est;
"R" bed	380		219-220,1'@ 3% est.
"S" bed			Shines @ 252,256,261, 257-259,2' @ 5% est.
Longview ("T" bed)			284-292,8' @ 6% est. 307-336,29'@ 2½% est. 336-342,6' @ 1% est. 363-380,13'@ 1% est. 380-397,17'@ 1% est. 397-416,19'@ 1% est. 425-434, 9'@ 3% est. 442-462,20'@ 1% est. Shines 477-484,492-493,

Summary of Hole JA-10

PUNCHEON CREEK PROJECT

DMEA Contract with B. H. Putnam, Operator

Hole No.	JA-10	Collared:	5-13-60
Farm:	Elvin Jackson	Bottomed:	5-23-60
Loc: N	47,671.44	Depth:	452
E	42,062.91	Reaming:	No Record
Elev:	1,509.51	Casing:	
Contractor:	E. J. Longyear Co.	Cement:	None
Logged By:	F. Fischer	Overburden:	118

Results

Top Of:		Zinc Mineralization	Pyrite Mineralization
Mascot			
Kingsport (CMss)			Shines 145-146,184,203, 220-222,270,292
"R" bed	306		306-310, 7% est.
			321-322, 10% est.
"S" bed			339-344, 5% est.
			360-393, 2% est.
Longview ("T" bed)	399		Shines 423-424,433,435

Summary of Hole JA-11

PUNCHEON CREEK PROJECT

DMEA Contract with B. H. Putnam, Operator

Hole No.	JA-11	Collared:	5-14-60
Farm:	Elvin Jackson	Bottomed:	5-21-60
Loc: N	47,006.85	Depth:	630
E	41,782.64	Reaming:	No Record
Elev:	1,449.84	Casing:	
Contractor:	Putnam Drlg. Co.	Cement:	
Logged By:	F. Fischer	Overburden:	48

Results

Top Of:		Zinc Mineralization	Pyrite Mineralization
Mascot			
Kingsport (CMss)	309	Trace @ 89	Shines @ 191-191½,207, 47-48,5% est;Shine @ 254 274½-275,10% est. 289-290, 15% est. 299-299½, 20% est. 302-302½, 15% est. 311-319,4% est;329-339, 3% est, 341-343½,½% est. 345-351,8% est; 351-365, 1% est. Shines 368,370,373,377-378 385-394,1½% est;Shines 402-403,419;445-446, 10% est;Shines 447, 452-453,454,460,467-481, 1% est;482-487,3% est. 487-500,1½% est;508-514, 1% est;Shines 537-540, 540-541,1% est. 545-550, 10% est; Shines @ 583, 590, 602-616,½% est.
"R" bed	463		
"S" bed			
Longview ("T"bed)			

Summary of Hole JA-12

PUNCHEON CREEK PROJECT

DMEA Contract with B. H. Putnam, Operator

Hole No.	JA-12	Collared:	5-23-60
Farm:	Elvin Jackson	Bottomed:	5-31-60
Loc: N	47,615.27	Depth:	413
E	41,979.09	Reaming:	No Record
Elev:	1,522.70	Casing:	
Contractor:	E.J.Longyear Co.	Cement:	None
Logged By:	F. Fischer	Overburden:	103

Results

Top Of:		Zinc Mineralization	Pyrite Mineralization
Mascot			
Kingsport (CMss		Shines 188,189-191, 195,199,204,205	207-211, 4% est. Shines @217,219,220,224, 230,231-237,3% est.
"R" bed	259	208-209,1'@ 3% est. Shines @ 217,284	Shines @241,247-248, 7% est.255-258,2% est. Shine @ 261,267-268, 3% est;270-281,1% est.
"S" bed			
Longview ("T"bed)	373		Shines @ 300,302,306,310, 314-321,4% est. 327-329,10% est. Shines 330,331, 340-348,8% est. 375-385,1% est. 385-393,4% est. 405-413, 4% est.

Summary of Hole JA-13

PUNCHEON CREEK PROJECT

DMEA Contract with B. H. Putnam, Operator

Hole No.	JA-13	Collared:	5-31-60
Farm:	Elvin Jackson	Bottomed:	6-6-60
Loc: N	47,502.96	Depth:	481
E	41,814.82	Reaming:	No Record
Elev:	1,530.70	Casing:	
Contractor:	E.J.Longyear Co.	Cement:	None
Logged By:	Hill & Fischer	Overburden:	88

Results

Top Of:		Zinc Mineralization	Pyrite Mineralization
Mascot			
Kingsport (CMss)		Shine @ 186,258,399	210-241, 6% est.
			267-272, 4% est.
"R" bed	279		277-284, 2% est.
			285-316, 3% est.
"S" bed			317-321, 2% est.
			390-420, ½% est.
Longview ("T"bed)	386		467-481, 3½% est.

Summary of Hole JA-14

PUNCHEON CREEK PROJECT

DMEA Contract with B. H. Putnam, Operator

Hole No.	JA-14	Collared:	6-7-60
Farm:	Elvin Jackson	Bottomed:	
Loc: N	47,211.14	Depth:	560
E	41,910.84	Reaming:	No Record
Elev:	1,453.70	Casing:	
Contractor:	E.J.Longyear Co.	Cement:	None
Logged By:	Fischer & Hill	Overburden:	55

Results

Top Of:		Zinc Mineralization	Pyrite Mineralization
Mascot			
Kingsport (CMss)	264		Shines 118;125-126;174; 197-201;203,214,243-257, 1½% est.
"R" bed	436		Shines 272,283-286,5%est. 288-308,1% est;308-324, 4% est;328-347,1% est.
"S" bed			347-357,2% est;Shines 368-369,381,392-393, 397,402,404,410-415, 1% est. 428-429,10% est; 429-432,2% est. 437-441,5% est;441-444, 2% est; 460-466,1% est, 466-481,½% est. 481-493,4% est;523-524, 6% est. 546-547,3% est.
Longview ("T"bed)	526		

Summary of Hole JA-15

PUNCHEON CREEK PROJECT

DMEA Contract with B. H. Putnam, Operator

Hole No.	JA-15	Collared:	6-16-60
Farm:	Alvin Jackson	Bottomed:	6-23-60
Loc: N	47,695.66	Depth:	450
E	42,289.47	Reaming:	No Record
Elev:	1,468.86	Casing:	
Contractor:	E.J.Longyear Company	Cement:	None
Logged By:	Fischer & Hill	Overburden:	46'

Results

Top Of:		Zinc Mineralization	Pyrite Mineralization
Mascot			
Kingsport (CMss)	151	Shine @ 205,290½,368	Shines 118,122,123, 169,184,210,226,227, 228,251,336,348,359, 374,377,385,388,398, 402-411, 2% Est. Shine 419-426, 446-450
"R" bed			
"S" bed			
Longview ("T"bed)	436		

Summary of Hole JA-16

PUNCHEON CREEK PROJECT

DMEA Contract with B. H. Putnam, Operator

Hole No.	JA-16	Collared:	
Farm:	Elvin Jackson	Bottomed:	6-29-60
Loc: N	47,886.82	Depth:	339
E	42,406.73	Reaming:	No Record
Elev:	1,504.42	Casing:	
Contractor:	Putnam Drlg. Co.	Cement:	None
Logged By:	Fischer & Hill	Overburden:	62

Results

Top Of:		Zinc Mineralization	Pyrite Mineralization
Mascot			
Kingsport (CMss)	92	293-294,1'@ ½% est.	
"R" bed	270		
"S" bed			
Longview ("T" bed)			

Summary of Hole MG-1

PUNCHEON CREEK PROJECT

DMEA Contract with National Lead Company

Hole No.	MG-1	Collared:	9-14-57
Farm:	J. C. McGinnis	Bottomed:	9-25-57
Loc: N	48,510.70	Depth:	591
E	44,196.80	Reaming:	None
Elev:	1,412.22	Casing:	BX-95, AX-103
Contractor:	Joy Mfg. Company	Cement:	None
Logged By:	J. W. Spears	Overburden:	95

Results

Top Of:		Zinc Mineralization	Pyrite Mineralization
Mascot			
Kingsport (CMss)	276	Trace @ 388, 390 Shines @ 427,428½	Shines @ 354,355,359,360 431-432,1' @ 1% est.
"R" bed	456		441-445½,4½'@ ½% est. Shines 455-468
"S" bed	520		509-511, 2' @ ½% est. Shine @ 513
Longview ("T"bed)	557		

Summary of Hole MG-2

PUNCHEON CREEK PROJECT

DMEA Contract with National Lead Company

Hole No.	MG-2	Collared:	9-26-57
Farm:	J. C. McGinnis	Bottomed:	10-8-57
Loc: N	48,675.46	Depth:	510
E	44,084.02	Reaming:	50-109
Elev:	1,467.47	Casing:	BX-42; AX-109
Contractor:	Joy Mfg. Company	Cement:	None
Logged By:	J. W. Spears	Overburden:	42'

Results

Top Of:		Zinc Mineralization	Pyrite Mineralization
Mascot			
Kingsport (CMss)	182	Trace @ 297 316-317,1'@ $\frac{1}{4}$% Est.	Shine @ 279, 306, 339-342,3'@ 2% est.
"R" bed	352		Shines @ 377,414$\frac{1}{2}$, 491$\frac{1}{2}$-499$\frac{1}{2}$
"S" bed	418		
Longview ("T"bed)	454		

Summary of Hole MG-3

PUNCHEON CREEK PROJECT

DMEA Contract with National Lead Company

Hole No.	MG-3	Collared:	10-8-57
Farm:	J. C. McGinnis	Bottomed:	10-15-57
Loc: N	48,843.77	Depth:	380
E	43,978.44	Reaming:	None
Elev:	1,520.97	Casing:	BX-127;AX-135
Contractor:	Joy Mfg. Co.	Cement:	None
Logged By:	J. W. Spears	Overburden:	127'

Results

Top Of:		Zinc Mineralization	Pyrite Mineralization
Mascot			
Kingsport (CMss)		Shines 187-191	Shines 229-232,242-243, 295-304,9'@ 1% est. 340-343,3' @ ½% est.
"R" bed	260		
"S" bed	321		
Longview ("T"bed)	354		

Summary of Hole MG-4

PUNCHEON CREEK PROJECT

DMEA Contract with National Lead Company

Hole No. MG-4

Farm: J. C. McGinnis

Loc: N 48,341.89
E 44,303.30

Elev: 1,368.57

Contractor: Joy Mfg. Co.

Logged By: J. W. Spears

Collared: 10-16-57

Bottomed: 10-29-57

Depth: 685

Reaming: None

Casing: BX-24; AX-30

Cement: None

Overburden: 24'

Results

Top Of:		Zinc Mineralization	Pyrite Mineralization
Mascot			
Kingsport (CMss)	389	Shine @ 491 493½-496, 2½'@ 0.38%	Shines @ 485, 493½, 495, 531½, 552½-553½,
"R" bed	557	503½-504½, 1'@ ¼%est. 510½-512, 1½'@ ¼%est.	585½-586½, 1'@ 1% est. Shines @ 597, 607
"S" bed	614	Shines @ 527, 530, 531½	
Longview ("T" bed)	660		

Summary of Hole MG-5

PUNCHEON CREEK PROJECT

DMEA Contract with National Lead Company

Hole No.	MG-5	Collared:	10-31-57
Farm:	J. C. McGinnis	Bottomed:	11-15-57
Loc: N	48,169.32	Depth:	830
E	44,413.07	Reaming:	None
Elev:	1,326.70	Casing:	BX-7; AX-10
Contractor:	Joy Mfg. Company	Cement:	None
Logged By:	McDonald & Spears	Overburden:	7'

Results

Top Of:		Zinc Mineralization	Pyrite Mineralization
Mascot			
Kingsport (CMss)	510	623½-627,3½'@ 0.44% Shines @ 653½,672½, 688-695	176½-177½,1'@ ½% est. Shines @ 221,325½,340, 350-359,9'@ ¼% est. Shines @ 362,366,367, 368,373,380, 386½-387,½'@ 3% est. 393½-398½,5'@ ½% est. 403-405½-2½'@½% est. Shines @ 432,430,521,535 539-541,2'@ ½% est. Shines 554-556½,571-574, 586-587,1'@ 1% est. Shines 596-600,614-615, 1' @ 1% est. 619½-620½,1'@ 4% est. Shines @ 625,628,629, 630-638, 8' @ ¼% est. 648-649,1'@ 2% est. 656-662,6' @ 3/4% est. Shines @ 669, 689
"R" bed	681		
"S" bed	744		
Longview ("T"bed)	791		

Summary of Hole MG-6

PUNCHEON CREEK PROJECT

DMEA Contract with B. H. Putnam, Operator

Hole No.	MG-6	Collared:	6-8-60
Farm:	McGinnis, J. C.	Bottomed:	
Loc: N	48,653.86	Depth:	350
E	43,662.19	Reaming:	No Record
Elev:	1,542.26	Casing:	
Contractor:	Putnam Drlg. Co.	Cement:	None
Logged By:	Hill & Fischer	Overburden:	40

Results

Top Of:		Zinc Mineralization	Pyrite Mineralization
Mascot			
Kingsport (CMss)			Shine @ 314
"R" bed	229		
"S" bed			
Longview ("T"bed)	323		

Summary of Hole ST-1

PUNCHBON CREEK PROJECT

DMEA Contract with National Lead Company

Hole No.	ST-1	Collared:	7-26-57
Farm:	W. Stapleton	Bottomed:	
Loc: N	50,467.04	Depth:	607'
E	48,560.66	Reaming:	None
Elev:	1,254.50	Casing:	BX-1½; AX-18½
Contractor:	Joy Mfg. Co.	Cement:	None
Logged By:	J. W. Spears	Overburden:	1½'

Results

Top Of:		Zinc Mineralization	Pyrite Mineralization
Mascot			
Kingsport (CMss)	312		
"R" bed	474		
"S" bed	533		
Longview ("T"bed)	564		

Summary of Hole ST-2

PUNCHEON CREEK PROJECT

DMEA Contract with B. H. Putnam, Operator

Hole No.	ST-2	Collared:	4-11-58
Farm:	W. Stapleton	Bottomed:	4-14-58
Loc: N	50,112.61	Depth:	210
E	46,395.44	Reaming:	None
Elev:	1,429.19	Casing:	BX-68, AX-87
Contractor:	Putnam Drlg. Co.	Cement:	None
Logged By:	J. W. Spears	Overburden:	68

Results

Top Of:	Zinc Mineralization	Pyrite Mineralization
Mascot		
Kingsport (CMss)		
"R"bed		
"S"bed	129	
Longview ("T"bed)	193	

Summary of Hole ST-3

PUNCHEON CREEK PROJECT

DMEA Contract with B. H. Putnam, Operator

Hole No.	ST-3	Collared:	4-15-58
Farm:	W. Stapleton	Bottomed:	4-22-58
Loc: N	49,904.16	Depth:	642
E	47,193.58	Reaming:	187'
Elev:	1,421.84	Casing:	BX-21; AX-220
Contractor:	Putnam Drlg. Co.	Cement:	None
Logged By:	J. W. Spears	Overburden:	21'

Results

Top Of:		Zinc Mineralization	Pyrite Mineralization
Mascot			
Kingsport (CMss)	350		
"R" bed	493		
"S" bed	568		
Longview ("T"bed)	632		

Summary of Hole ST-4

PUNCHEON CREEK PROJECT

DMEA Contract with B. H. Putnam, Operator

Hole No.	ST-4	Collared:	4-22-58
Farm:	W. Stapleton	Bottomed:	4-26-58
Loc: N	50,086.78	Depth:	479
E	47,092.89	Reaming:	None
Elev:	1,425.01	Casing:	BX-97; AX-115
Contractor:	Putnam Drlg. Co.	Cement:	None
Logged By:	J. W. Spears	Overburden:	97'

Results

Top Of:	Zinc Mineralization	Pyrite Mineralization
Mascot		
Kingsport (CMss)	201	
"R" bed	362	
"S" bed	431	
Longview ("T"bed)	465	

Summary of Hole ST-5

PUNCHEON CREEK PROJECT

DMEA Contract with B. H. Putnam, Operator

Hole No.	ST-5	Collared:	4-28-58
Farm:	W. Stapleton	Bottomed:	4-30-58
Loc: N	50,254.21	Depth:	350
E	47,000.42	Reaming:	None
Elev:	1,438.94	Casing:	BX-73, AX-97
Contractor:	Putnam Drlg. Co.	Cement:	None
Logged By:	J. W. Spears	Overburden:	73'

Results

Top Of:		Zinc Mineralization	Pyrite Mineralization
Mascot			
Kingsport (CMss)		Shine @ 171½, 200½-202, 1½'@ ½%est. Shines 203½-205, Shines 209, 210, 212½, 303½, 307-307½, 310½-312½, 318-318½,	Shine @ 178, 181, 187-192, 197, 206-208, 224, 218, 320-330, 338
"R" bed	227		
"S" bed	292		
Longview ("T"bed)	338		

Summary of Hole ST-6

PUNCHEON CREEK PROJECT

DMEA Contract with B. H. Putnam, Operator

Hole No.	ST-6	Collared:	4-30-58
Farm:	W. Stapleton	Bottomed:	5-2-58
Loc: N	50,341.85	Depth:	290
E	46,952.02	Reaming:	None
Elev:	1,446.54	Casing:	BX-38, AX-47
Constrctor:	Putnam Drlg. Co.	Cement:	None
Logged By:	J. W. Spears	Overburden:	38

Results

Top Of:		Zinc Mineralization	Pyrite Mineralization
Mascot			
Kingsport (CMss)		Traces 221½-226 237½-238	Shines 150-167, 171-179,8'@ 5½% est. 186-191,5'@ 4% est.
"R" bed	172		Shines 192, 196, 197½-201,3½'@ 3% est.
"S" bed	241		Shines 202,204,217,261
Longview ("T"bed)	274		

Summary of Hole ST-7

PUNCHEON CREEK PROJECT

DMEA Contract with B. H. Putnam, Operator

Hole No.	ST-7	Collared:	5-2-58
Farm:	W. Stapleton	Bottomed:	5-5-58
Loc: N	50,429.39	Depth:	226
E	46,903.17	Reaming:	82
Elev:	1,441.95	Casing:	BX-23, AX-48'
Contractor:	Putnam Drlg. Co.	Cement:	None
Logged By:	J. W. Spears	Overburden:	23

Results

Top Of:		Zinc Mineralization	Pyrite Mineralization
Mascot			
Kingsport (CMss)		153½-155,1½'of shines 157½-158½,1'@ 1% est.	
"R" bed	72		
"S" bed	142		
Longview ("T"bed)	205		

Summary of Hole ST-8

PUNCHEON CREEK PROJECT

DMEA Contract with B. H. Putnam, Operator

Hole No.	ST-8	Collared:	10-7-59
Farm:	W. Stapleton	Bottomed:	10-17-59
Loc: N	50,274.10	Depth:	433
E	47,349.83	Reaming:	72'
Elev:	1,407.23	Casing:	BX-30, AX-120
Contractor:	Putnam Drlg. Co.	Cement:	None
Logged By:	F. T. Fischer	Overburden:	31

Results

Top Of:		Zinc Mineralization	Pyrite Mineralization
Mascot			
Kingsport (CMss)	164	Shine @ 180,384-384½, 401½	Shines 229-231, 293-298,315,345
"R" bed	315		
"S" bed	386		
Longview ("T"bed)	426		

Summary of Hole ST-9

PUNCHEON CREEK PROJECT

DMEA Contract with B. H. Putnam, Operator

Hole No.	ST-9	Collared:	10-19-59
Farm:	W. Stapleton	Bottomed:	10-23-59
Loc: N	50,366.35	Depth:	392
E	47,401.97	Reaming:	None
Elev:	1,391.24	Casing:	BX-23, AX-40
Contractor:	Putnam Drlg. Co.	Cement:	None
Logged By:	F. T. Fischer	Overburden:	24'

Results

Top Of:		Zinc Mineralization	Pyrite Mineralization
Mascot			
Kingsport (CMss)	114	237-237½,½'@ 1.16% Shines @ 292	Shines @ 289-290, 309, 313-313½,321,328
"R" bed	268	294½-295,½'@ ½%est. Shines @ 299½,303,	
"S" bed	336	304½, 305½, 327½-329½,2'@ 1.56%	
Longview ("T"bed)	375	Shines @ 332½,334½, 339	

Summary of Hole ST-10

PUNCHEON CREEK PROJECT

DMEA Contract with B. H. Putnam, Operator

Hole No.	ST-10	Collared:	10-26-59
Farm:	W. Stapleton	Bottomed:	10-30-59
Loc: N	50,164.18	Depth:	431
E	47,048.43	Reaming:	None
Elev:	1,428.84	Casing:	BX-50, AX-112
Contractor:	Putnam Drlg. Co.	Cement:	None
Logged By:	F. T. Fischer	Overburden:	94'

Results

Top Of:		Zinc Mineralization	Pyrite Mineralization
Mascot			
Kingsport (CMss)	142		Shine 341, 362
"R" bed	312		
"S" bed	380		
Longview ("T"bed)	423		

Summary of Hole ST-11

PUNCHEON CREEK PROJECT

DMEA Contract with B. H. Putnam, Operator

Hole No.	ST-11	Collared:	11-2-59
Farm:	W. Stapleton	Bottomed:	11-14-59
Loc: N	50,172.96	Depth:	385
E	46,847.08	Reaming:	None
Elev:	1,439.41	Casing:	BX-80; AX-120
Contractor:	Putnam Drlg. Co.	Cement:	None
Logged By:	F. T. Fisher	Overburden:	80'

Result

Top Of:		Zinc Mineralization	Pyrite Mineralization
Mascot			
Kingsport (CMss)	77(EST)	185-185½, ½'@ 2% est. Shines @ 205,208, 210½-224½,14'@ 0.38% Shine @ 286½, 331, 341-342,1'@ 1½% est.	Shine 121,128,144-149, 182,203,218,220, 235,237,251,265,331, 340.
"R" bed	244		
"S" bed	316		
Longview("T"bed)	354		

Summary of Hole ST-12

PUNCHEON CREEK PROJECT

DMEA Contract with B. H. Putnam, Operator

Hole No.	ST-12	Collared:	11-16-59
Farm:	W. Stapleton	Bottomed:	11-21-59
Loc: N	50,089.84	Depth:	385
E	46,793.94	Reaming:	15'
Elev:	1,427.36	Casing:	BX-93, AX-140
Contractor:	Putnam Drlg. Co.	Cement:	None
Logged By:	F. T. Fisher	Overburden:	93'

Result

Top Of:		Zinc Mineralization	Pyrite Mineralization
Mascot			
Kingsport (CMss)	88	Trace @ 307½, 309½, 319½.	Traces 132-161, 225, 251-252, 293, 307-308½, 1½' @ 2% est. 310½-311, ½' @ 5% est.
"R" bed	245		
"S" bed	319		Trace @ 317
Longview ("T" bed)	369		

Summary of Hole ST-13

PUNCHEON CREEK PROJECT

DMEA Contract with B. H. Putnam, Operator

Hole No.	ST-13	Collared:	12-23-59
Farm:	W. Stapleton	Bottomed:	12-31-59
Loc: N	51,000.79	Depth:	336'
E	48,271.73	Reaming:	None
Elev:	1,440.48	Casing:	BX-36, AX-61
Contractor:	Putnam Drlg. Co.	Cement:	None
Logged By:	F. T. Fisher	Overburden:	36'

Result

Top Of:		Zinc Mineralization	Pyrite Mineralization
Mascot			
Kingsport (CMss)	40	Trace @ 270½, 287½.	Shines 255½-260,265,282, 295-297½, 301, 311.
"R" bed	213		
"S" bed	279		
Longview ("T"bed)	323		

Summary of Hole ST-14

PUNCHEON CREEK PROJECT

DMEA Contract with B. H. Putnam, Operator

Hole No.	ST-14	Collared:	1-1-60
Farm:	W. Stapleton	Bottomed:	1-8-60
Loc: N	50,912.45	Depth:	343
E	48,223.16	Reaming:	None
Elev:	1,413.70	Casing:	BX-25, AX-70
Contractor:	Putnam Drlg. Co.	Cement:	None
Logged By:	F. T. Fisher	Overburden:	25'

Result

Top Of:		Zinc Mineralization	Pyrite Mineralization
Mascot			
Kingsport (CMss)	51		270½-271, ½' @ 4% est. 293-294, 1' @ 1% est.
"R" bed	215		301-301½, ½' @ 2% est. 302-303, 1' @ 3% est.
"S" bed	282		308½-309, ½' @ 4% est.
Longview ("T"bed)	337		

Summary of Hole ST-15

PUNCHEON CREEK PROJECT

DMEA Contract with B. H. Putnam, Operator

Hole No.	ST-15	Collared:	1-11-60
Farm:	W. Stapleton	Bottomed:	1-15-60
Loc: N	50,817.34	Depth:	440
E	48,378.66	Reaming:	None
Elev:	1,386.27	Casing:	BX-27, AX-60
Contractor:	Putnam Drlg. Co.	Cement:	None
Logged By:	F. T. Fisher	Overburden:	27'

Result

Top Of:		Zinc Mineralization	Pyrite Mineralization
Mascot			
Kingsport CMss)	141		Shines @ 178,179,180,181½, 195-196, 1' @ 2% est.
"R" bed	305		197½-200½, 3' @ 2% est. Shine @ 247,249½-253,
"S" bed	367		Trace @ 315, 380½-383, 2½' @ 4½% est.
Longview ("T"bed)	399		385-387, 2' @ 2½% est. Shine @ 388, 389, 392½-395½, 3' @ 2½% est. 422½-423, ½' @ 2% est. Shine @ 431.

Summary of Hole ST-16

PUNCHEON CREEK PROJECT

DMEA Contract with B. H. Putnam, Operator

Hole No.	ST-16	Collared:	1-18-60
Farm:	W. Stapleton	Bottomed:	1-19-60
Loc: N	51,135.80	Depth:	190
E	48,098.39	Reaming:	None
Elev:	1,433.86	Casing:	BX-14, AX-30
Contractor:	Putnam Drlg. Co.	Cement:	None
Logged By:	F. T. Fisher	Overburden:	14'

Result

Top Of:		Zinc Mineralization	Pyrite Mineralization
Mascot			
Kingsport (CMss)		Shine @ 17' 21½-22½, 1' @ ½% est.	
"R" bed	67	43-45, 2' @ 1% est.	
"S" bed	120		
Longview ("T"bed)	162		

Summary of Hole ST-17

PUNCHEON CREEK PROJECT

DMEA Contract with B. H. Putnam, Operator

Hole No.	ST-17	Collared:	1-21-60
Farm:	W. Stapleton	Bottomed:	1-25-60
Loc: N	51,059.09	Depth:	245
E	48,155.73	Reaming:	60'
Elev:	1,421.52	Casing:	BX-56, AX-130
Contractor:	Putnam Drlg. Co.	Cement:	None
Logged By:	F. T. Fisher	Overburden:	55'

Result

Top Of:		Zinc Mineralization	Pyrite Mineralization
Mascot			
Kingsport (CMss)			
"R" bed	116		
"S" bed	178		
Longview ("T"bed)	213		

Summary of Hole ST-18

PUNCHEON CREEK PROJECT

DMEA Contract with B. H. Putnam, Operator

Hole No.	ST-18	Collared:	1-26-60
Farm:	W. Stapleton	Bottomed:	1-29-60
Loc: N	51,172.75	Depth:	312
E	48,365.64	Reaming:	None
Elev:	1,469.70	Casing:	BX-31, AX-40
Contractor:	Putnam Drlg. Co.	Cement:	None
Logged By:	F. T. Fisher	Overburden:	31

Result

Top Of:		Zinc Mineralization	Pyrite Mineralization
Mascot			
Kingsport CMss)		37-37½, ½' @ 1% est. 86-86½, ½' @ 2% est.	Shine @ 131, 177, 278, 305-312, 7' @ 5% est.
"R" bed	188	87½-88½, 1' @ 1.60%, 102-103, 1' @ 1% est.	
"g" bed	233	106-118½,12½'@ 1.1%, Shine @ 124,	
Longview ("T"bed)	267	125-125½, ½'@ 5% est. 130½-133,2½'@ 0.28% 135½-137½,2'@ 0.18% Shine @ 142.	

Summary of Hole ST-19

PUNCHEON CREEK PROJECT

DMEA Contract with B. H. Putnam, Operator

Hole No.	ST-19	Collared:	1-29-60
Farm:	W. Stapleton	Bottomed:	2-3-60
Loc: N	51,087.67	Depth:	315
E	48,319.65	Reaming:	None
Elev:	1,456.83	Casing:	BX-30, AX-85
Contractor:	Putnam Drlg. Co.	Cement:	None
Logged By:	F. T. Fisher	Overburden:	30'

Result

Top Of:		Zinc Mineralization	Pyrite Mineralization
Mascot			
Kingsport (CMss)			Shines 263½-264, 284½-285½.
"R" bed	196		
"S" bed	254		
Longview ("T"bed)	293		

Summary of Hole WS-1

PUNCHEON CREEK PROJECT

DMEA Contract with National Lead Company

Hole No.	WS-1	Collared:	8-9-57
Farm:	H. B. Winstead	Bottomed:	8-27-57
Loc: N	50,099.85	Depth:	910
E	48,757.53	Reaming:	None
Elev:	1,233.63	Casing:	BX-1; AX-20
Contractor:	Joy Mfg. Co.	Cement:	None
Logged By:	Hill & Spears	Overburden:	1'

Result

Top Of:		Zinc Mineralization	Pyrite Mineralization
Mascot			
Kingsport (CMss)	620	Shine @ 538, 763, 766½-767.	
"R" bed	783		
"S" bed	846		
Longview ("T"bed)	905		

REVISED - 11/59 ADD: 1/60, 2/60, 3/60, 4/60, 6/60

Plate - 14.

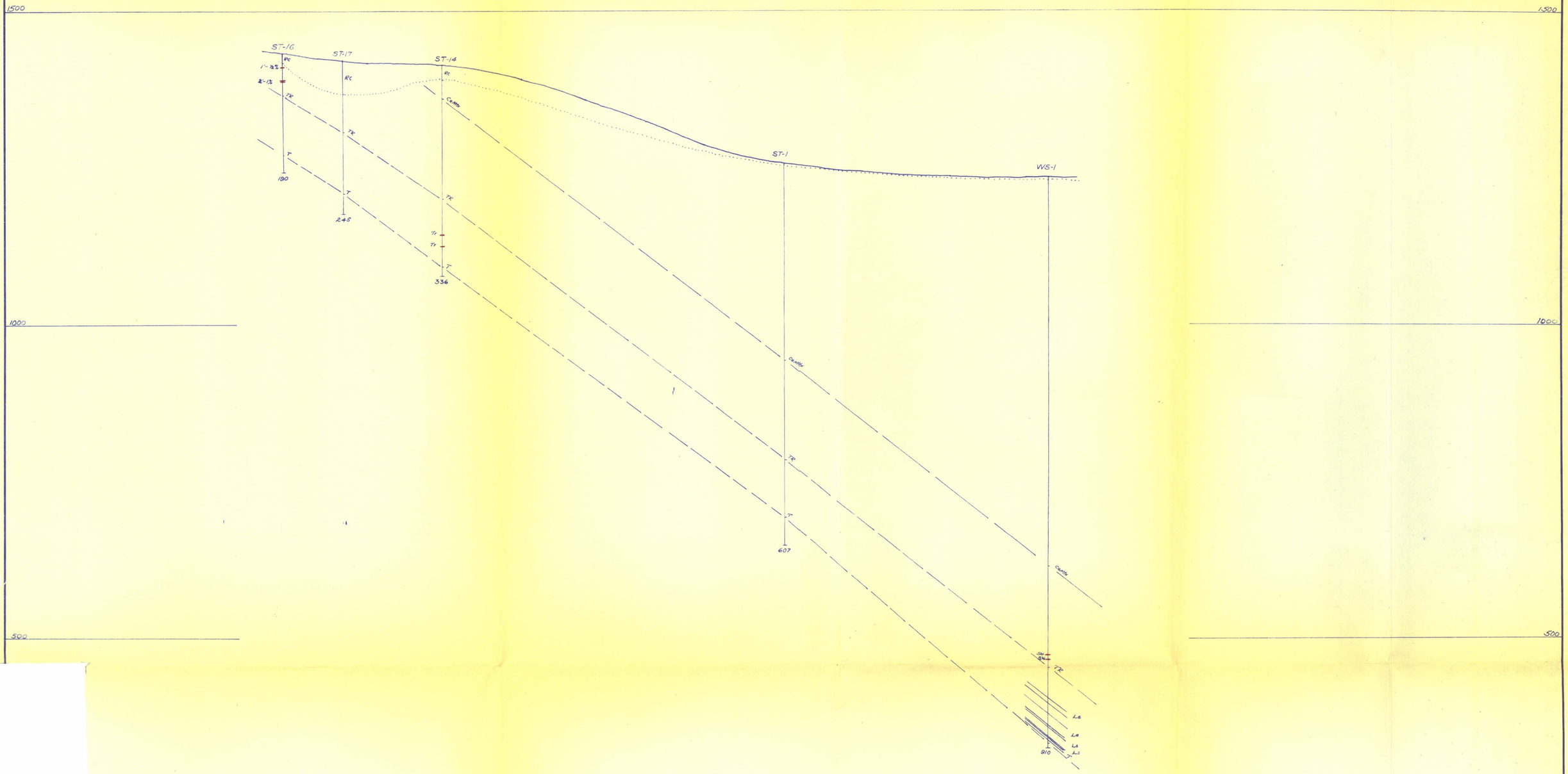

C-1725

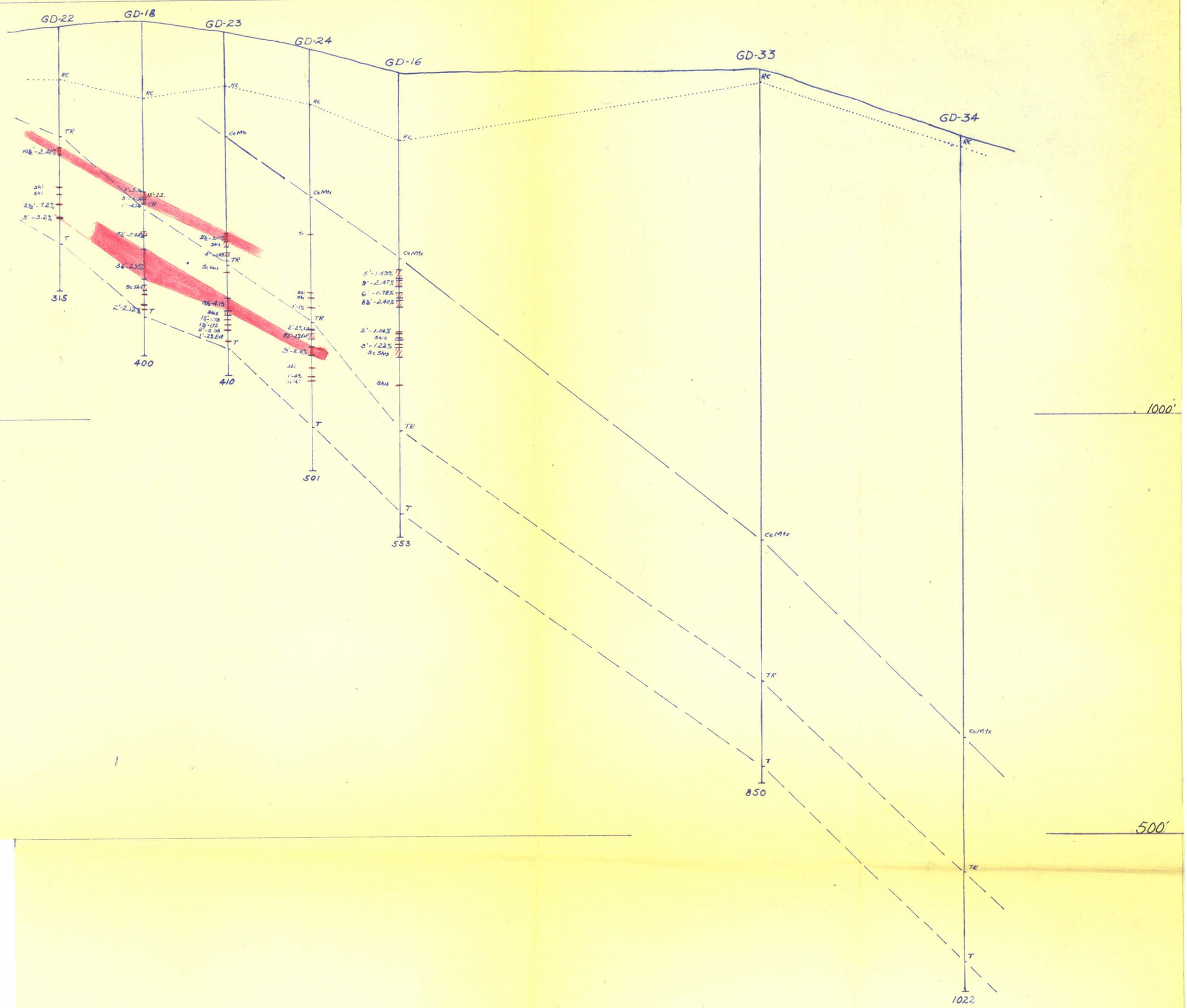
1500'
1000'
500'
GD-22
GD-18
GD-23
GD-24
GD-16
GD-33
GD-34
RC
TR
T
CeMtx
315
400
410
501
553
850
1022

C-1706

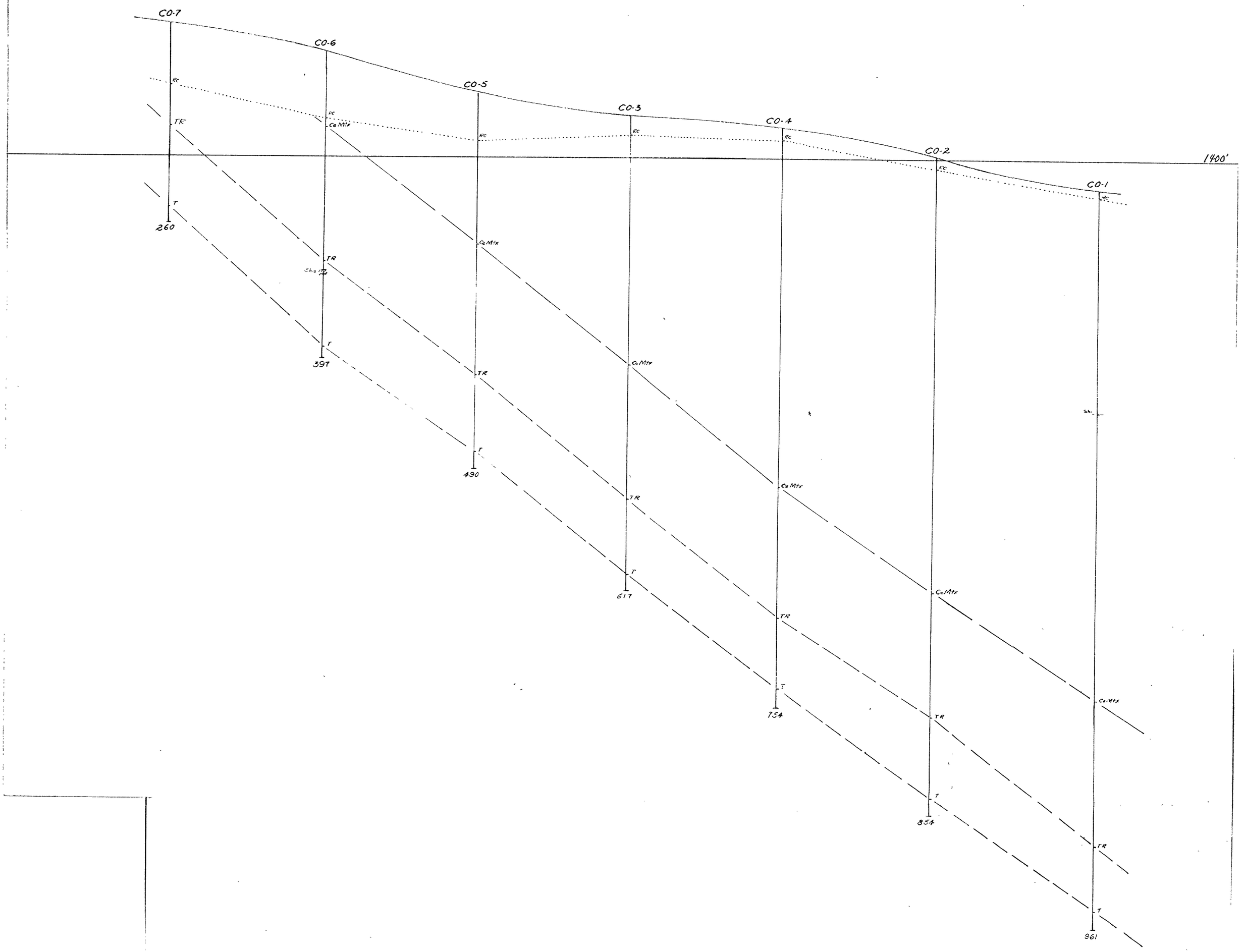
CO-7
CO-6
CO-5
CO-3
CO-4
CO-2
CO-1
1400'
RC
TR
T
Ca Mtx
Shis
260
397
490
617
754
854
961

Puncheon Camp Creek
BM TT 51 R 1251.30
WS-1 1233.63
ST-1 1254.55
NL-PC-1 1449.96
NL-PC-3 1438.75
NL-PC-4 1417.18
NL-PC-5 1407.87
SN-165 1376.43
ST-2 1429.19'
ST-3 1421.84'
ST-5 1438.94'
ST-6 1446.54'
ST-7 1441.95'
NL-PC-2 ST-4 1425.01' 1424.54
DA-1 1403.44
DA-2 1409.90
MG-1 1412.22
MG-2 1467.47
MG-3 1520.97
MG-4 1368.57
MG-5 1326.70
CO-1 1360.90
CO-2 1402.85
CO-3 1454.16
CO-4 1440.57
CO-6 1534.55
CO-7 1571.92
C-1499
C-1720
C-1724
C-1725

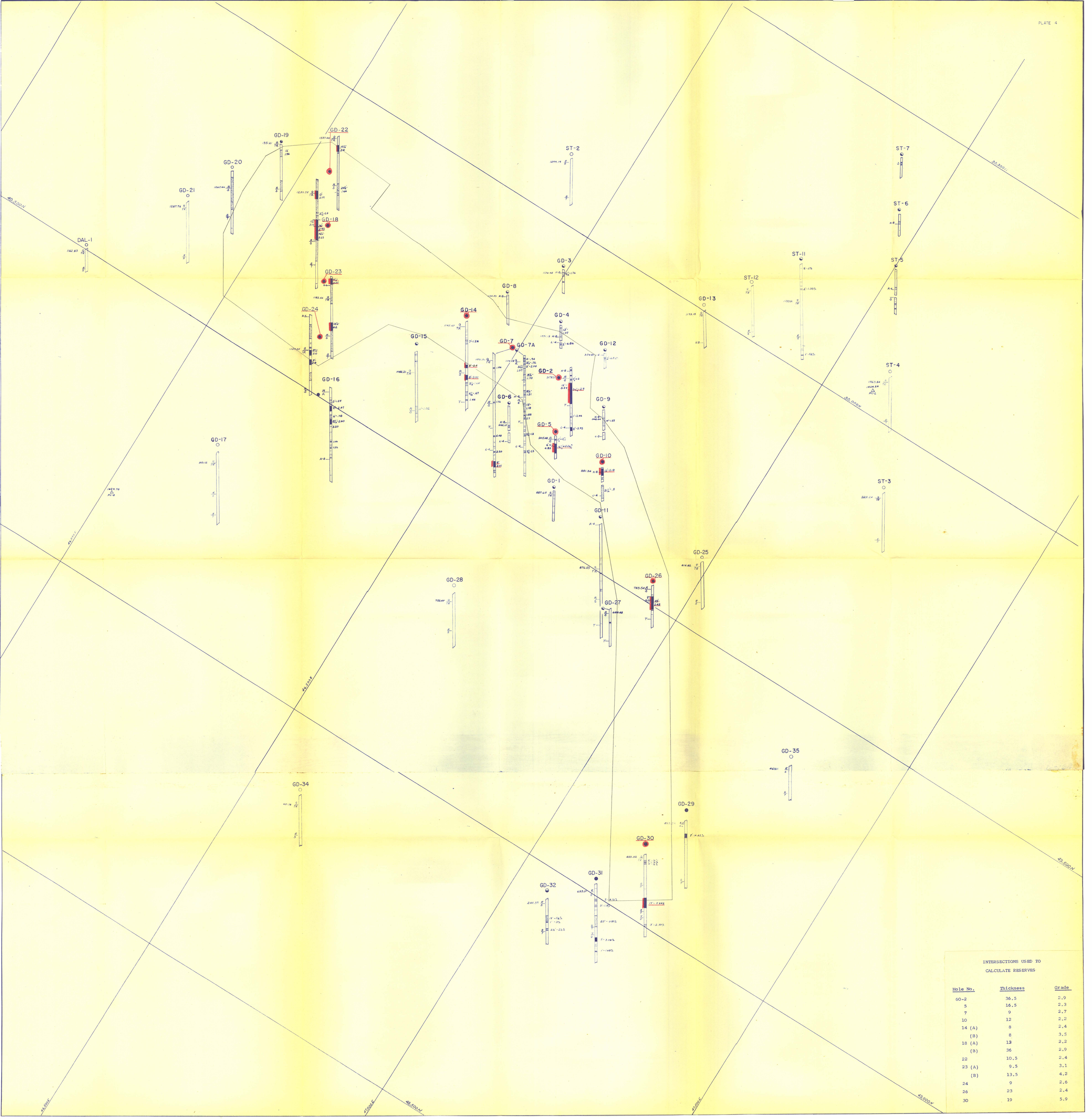

INTERSECTIONS USED TO CALCULATE RESERVES

Hole No.	Thickness	Grade
60-2	36.5	2.9
5	16.5	2.3
7	9	2.7
10	12	2.2
14 (A)	8	2.4
(B)	8	3.5
18 (A)	13	2.2
(B)	36	2.9
22	10.5	2.4
23 (A)	9.5	3.1
(B)	13.5	4.2
24	9	2.6
26	23	2.4
30	19	5.9