DATA RESEARCH UNIT

I. C. 6961

October 1937

Department of the Interior

United States Bureau of Mines
John W. Finch, Director

INFORMATION CIRCULAR

PLACER OPERATIONS OF HUMPHREYS GOLD CORPORATION, CLEAR CREEK, COLO.

BY

E. D. Gardner and Jos. R. Guiteras

After this report has served your purpose and if you have no further need for it, please return it to the Bureau of Mines, using the official mailing label on the inside of the back cover.

I. C. 6961,
October 1937.

INFORMATION CIRCULAR

DEPARTMENT OF THE INTERIOR - BUREAU OF MINES

PLACER OPERATIONS OF HUMPHREYS GOLD CORPORATION, CLEAR CREEK, COLO.[1]

By E. D. Gardner[2] and Jos. R. Guiteras[3]

CONTENTS

	Page
Introduction	2
Acknowledgments	2
History	2
Geology	4
Sampling	5
Water Supply	6
General plan of operations	6
Excavation	7
Washing and screening	9
Hopper	9
Feeder	9
Trommel	9
Stacker	10
Sand pump and pipe line	10
Gold-washing plant	10
Gold-saving equipment	10
Tailings disposal	11
Sampling of tails	11
Method of cleaning up	11
Method of treating amalgam and sluice concentrate	12
Recovery	13
Camp	13
Lighting	13
Operation	14
Labor	14
Power	15
Costs	16
Costs of mining	16
Cost of plant	16

1/ The Bureau of Mines will welcome reprinting of this paper, provided the following footnote acknowledgment is used: "Reprinted from U. S. Bureau of Mines Information Circular 6961."

2/ Supervising engineer, Metal Mining Methods Section, Mining Division, Southwest Experiment Station, Tucson, Ariz.

3/ Mining engineer, Metal Mining Methods Section, Mining Division, Salt Lake City, Utah.

ILLUSTRATIONS

Figure	Following Page
1. Plan of Humphreys operations, North Clear Creek, Sept. 19, 1936.....	6
2. Flow sheet of operation, Humphreys Gold Corporation.....	6

INTRODUCTION

Humphreys Gold Corporation of Denver, Colo., was conducting a successful placer operation in 1936 on North Clear Creek about 6 miles below Blackhawk in Gilpin County, Colo. About 3,000 cubic yards of gold-bearing gravel are dug daily (September 1936) by two draglines and a power shovel. The gravel is screened in a portable washing plant; the trommel oversize is discarded, and the undersize is pumped to a gold-saving plant. The gold is caught in riffles in sluice boxes. The total cost of mining is about 20 cents per cubic yard.

The mine is in a narrow canyon at an altitude of 7,200 feet. The Blackhawk-Central City branch of the Colorado & Southern RR. runs over the property. Freight platforms for receiving supplies were moved as the workings advanced. The workmen reached the mine on a speeder that ran on the railroad tracks from a point on the automobile highway (U.S. 40) on Clear Creek near the bottom of Floyd Hill, about 5 miles distant. The mine is 36 miles by road and speeder, or 30 miles by rail, from Denver.

ACKNOWLEDGMENTS

Officials and employees of Hymphreys Gold Corporation cooperated in the preparation of this paper by supplying data requested by the authors, and the paper is published with the permission of the company.

HISTORY

Placer mining was begun on upper Clear Creek in 1859. The early miners washed bars and rich surface accumulations mainly by hand methods; some "sniping" has continued until the present. The main channels on both Clear Creek and North Clear Creek have been largely drift-mined. The grade of the stream bed (about 3 percent) did not permit hydraulic mining, and large boulders in the lower reaches of the gold-bearing area discouraged dredging.

Humphreys Gold Corporation began operations in 1932 on Clear Creek about 2-1/2 miles below its junction with North Clear Creek, continued up the main stream to the forks and then up North Clear Creek. At the end of the 1936 season, about 4 miles of the stream beds had been worked. A suction dredge was first used, but after a month's operation it was found to be impractical. The gravel was then excavated for 3 or 4 months

in 1933 by a 1-1/4-yard dragline traveling on the land, and was washed on a floating plant. The bouldery ground made digging under water difficult, and considerable gold was lost in the pit. Moreover, much time was lost by rehandling of rocks rejected by a grizzly over the hopper of the washing plant.

Although the methods used during the first two attempts did not prove successful, the work done proved the value of the ground. A screening and scrubbing plant was then built to be used on the bank and a separate concentrating plant was constructed. A trommel with 1-1/4-inch round openings was mounted on the screening plant. The oversize from the trommel was returned to the pit by a stacker, and the undersize was pumped with the wash water by an 8-inch dredge pump through an 8-inch pipe line to the concentrating plant. The pipe line discharged into a wire trommel with 2-mesh openings; the oversize went through riffles and the undersize to two 10-foot-diameter circular jigs, each having a capacity of about 70 tons per hour. The jig tailings went through sluices and the hutch concentrates to a magnetic separator. The magnetic products went to waste and the nonmagnetic material was pumped to a Wilfley table. A streak of concentrate containing the metallic gold went to the amalgamation room, the rest of the concentrates was shipped to a smelter and the tails were run to waste. The capacity of the one table used was insufficient to treat the jig concentrates; to conserve space and to simplify the flow sheet, the magnetic separator and the table were removed. The hutch concentrates were then run through a small sluice to trap coarse gold and were then treated in four 24-inch flotation cells. The flotation concentrate was shipped to the smelter and the tails run to waste.

It was believed that large deposits containing gold-bearing sulphides were present in the bed of Clear Creek as the result of many years of milling gold-lode deposits on the headwaters of the stream, mainly at Central City and Blackhawk. The concentrating machinery was installed to recover the gold-bearing sulphides supposed to be in the gravels. It was found, however, that the sulphides that had been deposited in the gravels had largely been oxidized, leaving fine gold that could be recovered in sluices. The quantity of sulphides recovered did not justify the type of operation, and the use of the concentrating machinery was discontinued. The equipment, however, functioned well; the tailing contained 0.02 to 0.04 ounce gold to the ton.

The present plan of operations (September 1936) was adopted in late 1933. A second 1-1/4-yard dragline was bought in 1933. The two small draglines were replaced by two 2-1/2-yard machines and a power shovel added to the equipment in the autumn of 1934.

Improvements in practice and better digging ground have been responsible for progressively lower operating costs.

The pay gravel will be exhausted at the end of the 1936 season and the equipment will be shipped to Clancy, Mont., about 12 miles south of Helena, for working a deposit of gravel owned by the corporation on Clancy Creek. The draglines, screening plant, and pumping plants will be electrified for the new location.

The yardage handled by the plant from 1934 to 1936 is shown in the following table:

Year	Total yardage	Cubic yards per month	Cubic yards per day
1934 1/	197,249	35,860	1,195
1935 1/	300,880	35,400	1,180
1936 2/	612,144	81,600	2,720
Total	1,110,273		

1/ Mined from main Clear Creek below the forks; operations handicapped by high water.
2/ Mined from North Clear Creek.

GEOLOGY

Clear Creek drains a large area in which many gold mines have been worked. Millions of dollars worth of gold have been extracted from the lode mines above the present placer operations. All of the stream gravel, however, does not contain gold in paying quantities. The operations of the Humphreys Gold Corporation began at the lower end, 1 mile of the stream bed was worked, 1/2 mile was skipped, 1 mile was worked, 3/4 of a mile was skipped, and up to September 1936 3/4 of a mile was worked.

The gold-bearing channel ranges from 75 to 240 feet in width and 5 to 30 feet in depth. The average width that has been worked is 150 feet and the average depth 15 feet. The gold values are spotty. The main channel had been drift-mined over a width of 20 feet for practically the full length of the recent workings. A bedrock flume and a sluice box with block riffles left by the early miners were still in place and exposed in the face of the pit in September 1936. The sluice box was about 4 feet above the flume and a few feet to one side. These evidences of early mining have been followed for about a mile by the present operators. Occasional rich spots are found, which the old-timers missed. The drift miners piled the boulders on the cleared bedrock; occasionally these cause operating difficulties. In places, a second pay streak above bedrock had been drifted.

The gravel is relatively easy digging and easy washing. Numerous boulders over 24 inches in diameter are present, but the ground contains little clay. About half the yardage handled in 1936 was screen oversize (plus 1-1/8 inch). The ground worked in 1935 had less oversize. The gravel contains 5 or 6 pounds of black sand to the cubic yard.

The bedrock, consisting of a decomposed granite and soft schist, has an average slope of 3 percent. Usually, only the top inch or so is skimmed off. Where it contains many crevices and is not too hard, more of it is taken up. An attempt was made to clean crevices in bedrock by hand at a place on the main stream where the bedrock was hard, but the additional amount of gold recovered did not pay the labor cost.

The gold ranges in size from fine to coarse; most of it would be classed as coarse gold. Few nuggets have been found; the largest was worth $17. The gold from the mill tailings in the creek is extremely fine. Some of it is caught on the cloth riffles described later.

In September 1936 the flow of North Clear Creek was about 10 second feet. At times this creek does not supply enough water for washing operations without recirculation; at other times floods fill the pit with mill tailings and debris brought down from above. Clear Creek proper is a much larger stream; control of the main stream below the junction contributed appreciably to the cost of former operations.

SAMPLING

The ground is sampled ahead of mining. At the beginning this was done by digging pits. A steam drill was used in 1934; it was replaced in 1935 by a gasoline self-propelling rig mounted on crawler treads. Six-inch holes are drilled. Holes are generally spaced 30 feet apart in rows across the canyon; the rows are at 1/4-mile intervals. Cost per foot of drilling varied greatly according to the depth of holes and character of the gravel. The costs ranged from $2.25 to $5.00 per foot of hole drilled.

The value of the gravel being mined is estimated by panning and counting the colors of gold in each pan; these estimates are checked from time to time by weighing the gold and computing its value against the volume of the sample. This work is done on day shift by one of the oilers previously trained in the sampling crew. Testing of the ground is conducted as a separate operation.

The amount of gold recovered from individual blocks does not check very closely with the amount indicated by drilling, but the overall recovery checks fairly well. In September 1936 the gravel treated was richer than drill sampling indicated. On North Clear Creek early hand working was extensive and in worked ground comparison of drill sampling with operations shows necessity for close drilling to give a dependable average. On Main Clear Creek below the forks hand workings were not so extensive because of the rapid large stream, and drill results checked more closely with operating results.

In 1935 a comparison was made between the gold recovered and that indicated by drilling for a portion of the gravel mined. Estimates made from the drilling indicated the area contained 214,193 cubic yards averaging 43.88 cents per yard. Actually, 177,651 cubic yards were mined, with a recovered value of 60.95 cents per cubic yard, as calculated from mint returns. The yardage mined was 83 percent of the original estimate, and the recovered value was 139 percent. The estimated total money value for the area mined was $93,997, as compared with an actual recovery of $108,273, or 115 percent of the estimate.

WATER SUPPLY

Water for washing and screening the gravel is pumped from the creek by a 10-inch centrifugal pump powered by a 115-horse power, 4-cylinder, gasoline engine and mounted on a self-propelled tractor chassis. The pump is operated at 680 to 700 r.p.m. and supplies about 1,500 gallons per minute. The water is delivered to the screening plant through an 8-inch line made of alternate 25-foot lengths of iron pipe and rubber hose. The length of the line varies from 50 to 300 feet (fig. 1). The water is muddy as a result of dumping tailings from concentrating mills into the creek above the placer operations. The pressure at the washing plant is about 60 pounds per square inch.

Additional water is needed for the gold-saving plant. About 800 gallons per minute are pumped to that plant from the pit by a 6-inch self-priming centrifugal pump powered by a 50-horse power gasoline engine. This pump is mounted on wheels. When it is on level ground, it is pulled ahead by a tractor; when it is in a hole, it is picked up and moved by one of the draglines.

GENERAL PLAN OF OPERATIONS

The plant consists of two draglines on the bank ahead of the advancing face, a washing and screening plant between the draglines, a power shovel in the pit, and a gold-saving plant some distance behind on the tailings pile. The washing plant is moved up with each cut across the face; the gold-saving plant periodically. The general plan of working in September 1936 is shown in figure 1. The flow sheet is shown in figure 2.

The creek is diverted into a new channel dug by a dragline along one side of the ground being worked. The pit is drained by a ditch in the bottom of the pit next to the diverted creek. A flood in August 1936 shut down the plant for two days while a new drain to the pit was being cut by a dragline.

Where the channel is less than 180 feet wide, the entire face of the pit is advanced at one time; where the channel is wider, half of the face is advanced at a time. Where the pit is mined in two sections, the first is advanced 150 to 200 feet and then the equipment is moved back and the other section is mined. Usually, one setting of the gold-saving plant and the main pump will serve both sections.

The tailings (oversize) from the screening plant are piled in the middle of the pit when only one cut is taken. The sand tailings from the gold-saving plant are stored on the side next to the railroad track, and the other side is left open for drainage. When two cuts are taken, the oversize is stacked in two rows.

Where the railroad track is on pay gravel, it is shifted. The excavation, when close to the railroad track, is filled flush with the top of the side bank with sand tailings as the face of the pit is advanced, to prevent subsidence of the roadbed.

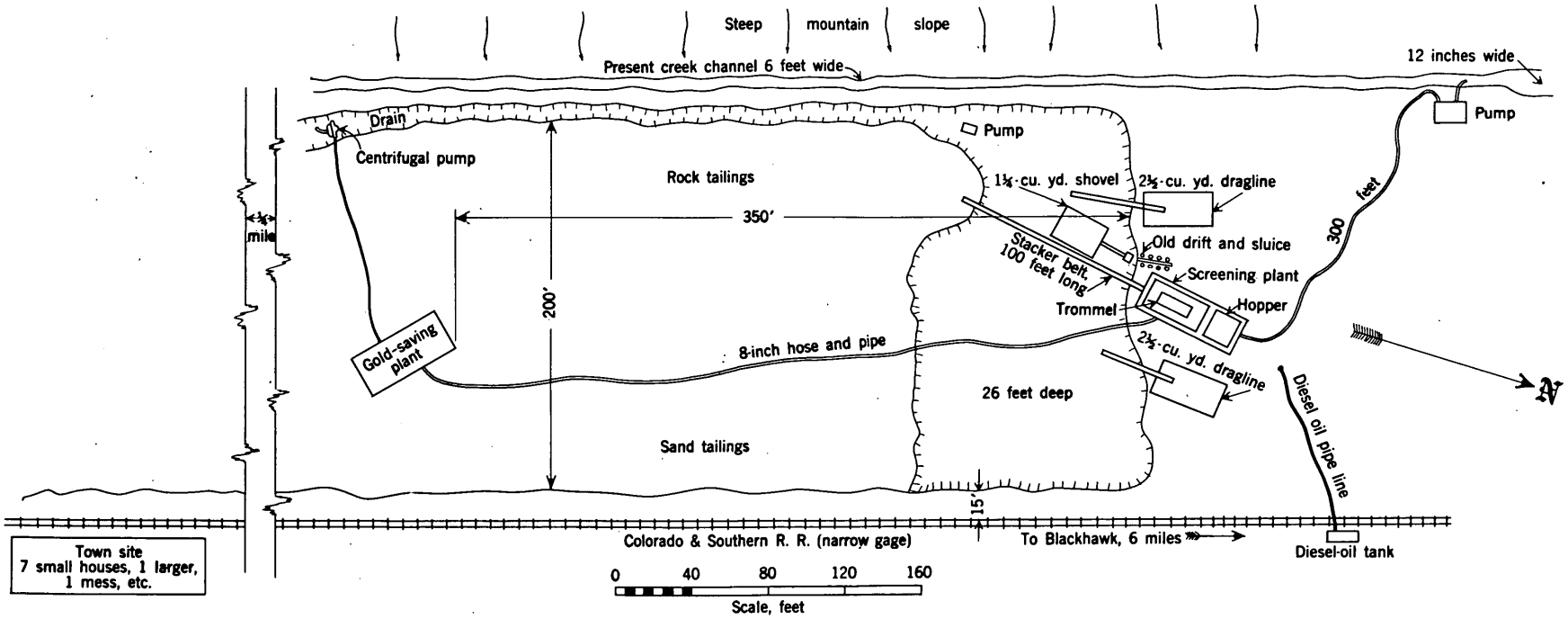

Figure 1.—Plan of Humphreys operations, North Clear Creek, Sept. 19, 1936.

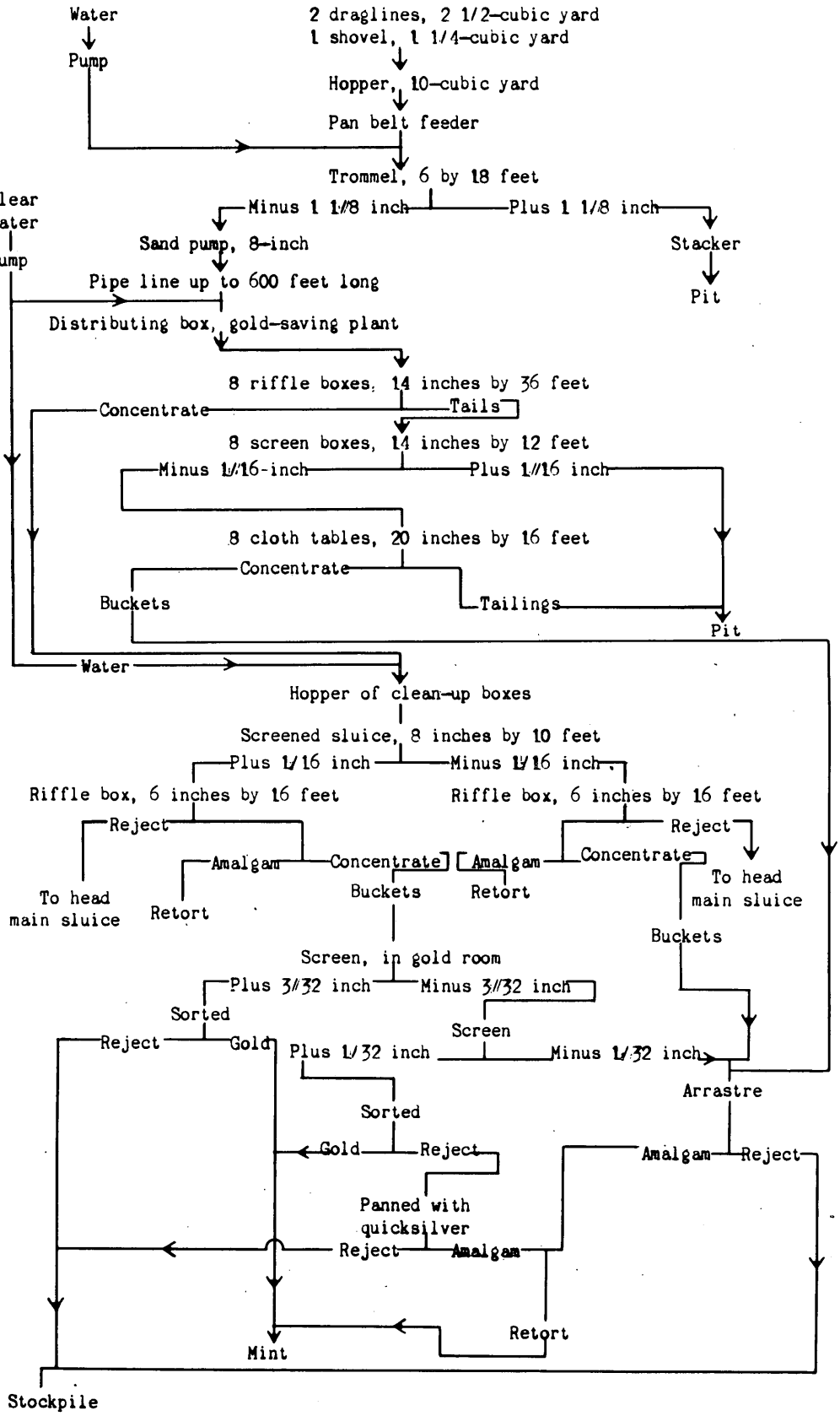

Figure 2.– Flow sheet of operations, Humphreys Gold Corporation.

Overburden is stripped and cast aside by the draglines where it is low in gold content; values and physical or topographical conditions make it advisable.

Dams 5 feet high and the width of the cut are built near the face to keep the water from the sand tailings out of the part of the pit that is being worked. A new dam is built about once a week. A drain is kept open at the end on the creek side to permit the water that seeps down on bedrock to get away.

The screening plant is moved ahead 20 or 25 feet at a time. The average time required for moving up is 40 minutes. The gold-saving plant is moved ahead 200 feet or less at a time; the average time consumed in moving up is 3 hours. Both plants are self-propelled. In September 1936 the traction gears on the screening plant were broken and it was towed forward by one of the draglines.

Mining continues each season until prevented by cold weather. A sustained temperature of 15° F will stop operations. Ice first affects the stacker belt by causing the drive pulley to slip. The pulley is heated by a blow torch, and three barrel stoves are used along the stacker to heat the belt during cold weather in the fall and spring. The plant was shut down from November 1935 to the middle of March 1936, during which time repair and remodeling work was carried on.

Rough sections of the area to be excavated are smoothed over with a caterpillar tractor equipped with a road blade. A pump is mounted on the tractor and is used for emergency pumping. The tractor is also used for preparing a new roadbed for the railroad when it is necessary to move the track. The railroad track has been moved four times. The tractor has been used for moving equipment and doing other odd jobs; it has proved to be a handy tool.

Oil and grease that drop on the ground from the draglines and the screening plant are cleaned off ahead of excavating; otherwise, they would cause some of the gold to float through the sluices.

A gasoline speeder is used on the railroad for transporting men and light supplies from the automobile road to the workings. The speeder and a trailer will carry one shift of workmen. The speeder is also used for transporting men between the camp and their work at the beginning and end of a shift and at meal time.

In good digging ground the draglines, can overload the screening plant. In September 1936 the capacity of the screening plant limited the yardage handled in a day.

EXCAVATION

The gravel is excavated by two full-revolving draglines with 50-foot booms and 2-1/2-cubic yard Esco buckets. The draglines are mounted on crawlers and powered with 150-horse power gasoline engines. They are capable of excavating to a depth of 30 feet. A 1-1/4-yard full-revolving Diesel shovel with a 22-foot boom is used in the pit for cleaning bedrock, moving large boulders, and digging out corners that the draglines cannot reach. The section

of the bank directly under the stacker from the screening plant is dug with the shovel and the material is dumped where a dragline can reach it easily. When the shovel is not used in the pit, gold recovery drops off. The shovel is also used for leveling off the piles of coarse tailings, for moving the gold-saving plant, for building dams to keep the water from tailings out of the pit, and for excavating a channel for the creek. The dragline and shovel operators do their own repair work under the direct supervision of the assistant superintendent.

The two draglines can take a cut 150 feet long with a single set-up of the screening plant; with the help of the shovel, a 200-foot cut can be taken. The face of the bank is advanced from 20 to 25 feet for each position of the screening plant.

The excavating equipment can handle 4,500 cubic yards bank measure each day of 20 hours, with no delays in good digging ground. It was averaging about 3,000 cubic yards daily in September 1936 when easy-digging gravel was being handled. The average for 1936, however, as previously shown, was 2,720 cubic yards. In good digging ground each dragline will excavate and dump one bucket per minute. Operations are slowed down by high water and bouldery ground and sometimes are impeded by high concentration of tailings deposited in the creek bottom from the mills upstream.

The draglines and shovel are equipped with caterpillar traction. The treads on the draglines are 15 feet long and 24 inches wide; the gage is 12 feet.

The buckets on the draglines have four teeth, which cost $3.50 and must be replaced every 3 days. Repointing the teeth and tipping them with stellite did not prove profitable; the worn teeth are discarded.

A special lip of 1-inch manganese steel is used on the shovel dipper to permit even digging in cleaning up bedrock. Teeth on the dipper made grooves in the bedrock, causing the loss of some gold. The special lip is used on the dipper for all digging.

The digging cables on the draglines are 1-1/8 inch in diameter, Lang-lay, and 65 feet long. They are run to failure and require about 30 minutes for replacement. They average 150 hours of service. The hoist cables on the draglines are 1 inch in diameter and 130 feet long; they last about 800 hours. The hoist line on the shovel is of 7/8-inch cable.

Timber from the old sluice, including the block riffles and similar trash, is put through the trommel. Any gold remaining in the old riffles probably is loosened by this treatment.

WASHING AND SCREENING

The washing and screening plant consists essentially of a hopper feeder, trommel, stacker, and sand pump. The entire unit is mounted on a caterpillar-tractor chassis and is propelled by a 150-horse power gasoline engine. The plant has a steel framework and a flat bottom. The sheave for raising and lowering the stacker is in an "A" framework at the top. The plant weighs 125 tons and is full revolving on its crawler base.

The plant runs with little interruption; only a small part of the lost time, other than for moving, can be attributed to it. Before each move the ground that is to be occupied by the plant is smoothed by one of the draglines in order that the plant may be set level.

Hopper

The gravel is dumped by the draglines into a hopper that holds 10 cubic yards. The top of the hopper is 18 feet above the ground. There is no grizzly; boulders too large for the plant to handle are sorted out and pushed aside by the shovel in the pit.

Feeder

The bottom of the hopper is the lower end of a 42-inch by 16-foot pan belt feeder, which discharges the gravel into a chute to the trommel. The speed of the feeder can be varied; usually it is 18 to 20 feet per minute. The rate of feeding the plant is controlled at this point. The trommel discharge on the stacker belt is watched; if it is dirty, the feeder is slowed down. The present slope of the feeder is the maximum slope at which it will work efficiently. It appears to be too steep for wet weather and plans have been made to use a flatter slope after the present season.

Trommel

The trommel is 6 by 18 feet; the screen plates, of which there are five rows, are made of cast manganese steel. The holes in the screens are all 1-1/8 inches in diameter. The screens are cast to give an outward flare to the holes in order to minimize blinding. The trommel slopes 2 inches to the foot; it is driven at 11 r.p.m. by a 50-horsepower gasoline engine. Although boulders up to 40 inches across can be handled by the trommel, an effort is made not to put any through over 24 inches in diameter.

Water is pumped to the plant through the 8-inch line previously described. Two 2-inch pipes with flattened ends serve as nozzles to spray water on the incoming gravel at the head of the trommel. As the gravel moves through the trommel it is further washed by sprays issuing from slots in the bottom of a 5-inch pipe that extends into the trommel near the top.

The oversize from the trommel drops onto the conveyor belt of the stacker; the undersize flows into the suction box of the sand pump.

Stacker

The stacker is 100 feet long, which is long enough for the ground being worked. The discharge end can be raised and lowered. The stacker belt is 5/8 inch thick and 36 inches wide and travels at a speed of 200 feet per minute. It delivers the trommel oversize to a rock pile behind the working pit.

The stacker belt and the trommel feeder are driven together by a 40-horsepower gasoline engine.

Sand Pump and Pipe Line

The undersize from the trommel is pumped by an 8-inch, manganese-steel sand pump through an 8-inch line to the gold-saving plant. The pump is driven by a 150-horsepower gasoline engine. The maximum length of the pipe line is 600 feet. It is made of alternate lengths of iron pipe and rubber hose. The maximum life of the iron sections is 6 months; the hose lasts about 18 months. In a few places two iron sections are joined together. Victualic connections are usually used for this purpose, as they permit some flexibility. Practically no gold collects at these connections but some is held back where standard connections are used. It is recovered when the pipe is disconnected for moving or replacement.

The sand pump breaks up any balls of clay that get through the screen, and thus contributes to the washing of the undersize.

No gold is recovered in the suction box or elsewhere on the washer.

GOLD-WASHING PLANT

The gold-saving plant is mounted on the chassis of a crawler crane and is propelled by a 90-horsepower gasoline engine. The caterpillar treads are 12 feet long, 15 inches wide, and have a 10-foot gage.

The ground is leveled off before the plant is set on a new site. The machine is equipped with hydraulic jacks for leveling it across the line of sluices, should that be found necessary. The base of the plant is built up in order that there may be sufficient elevation for tailings disposal.

Gold-Saving Equipment

The method of saving the gold is patterned after standard gold-dredging practice. The undersize from the screening plant is discharged into a distributing box at the top of the gold-saving plant, from which it flows through pipes to sluice boxes. Clear water from the pit is pumped into the distributing box through a 6-inch pipe. The gold-saving equipment consists principally of eight main sluices set in two banks of four sluices each, one bank on each side of the plant. The sluices are each 14 inches wide and 48 feet long. The first 36 feet contains riffles and the bottom of the last

12 feet is a screen with 1/16 by 1/2-inch holes. The speed of the top of the water through the main sluices is a little less than 10 feet per second. The grade of all of the sluice boxes is 1-1/4 inches to the foot. The undersize from the screens in the main sluices drops to the head of eight 20-inch sluices, four on each side of the plant. They are 16 feet long and lined with corduroy cloth. The cloth plant was put in to recover extremely fine gold that is carried over the riffles in the main sluices; it is thought that this gold comes mainly from mill tailings. The lower ends of the corduroy boxes are suspended from a rope block, which permits easy control of the slope.

The riffles in the main sluices are strips of 3/16-inch iron; they are 1-1/4 inches high and are set 1-3/8 inches apart, with the tops sloping down-current. They are welded to end-pieces in sections 3 feet long. Quicksilver is used in the riffles; 5 pounds of it is sprinkled in the heads of the main sluices daily. The quicksilver loss is 4 to 5 pounds per month. Corduroy cloth is used under the riffles in the lower section of the boxes.

Tailings Disposal

The gold-saving plant is equipped with two dewatering tanks, which are used when there is a shortage of water. A 6-inch sand pump driven by a 40-horsepower gasoline engine discharges the dewatered tailings through a pipe. In September 1936 the dewatering tanks had been removed and the tailings were being discharged through a tail sluice at one end of the plant.

Sampling of Tails

The sluices on one side of the plant discharge into a cross box 14 inches wide and 16 feet long. The bottom of the box is arranged in the same manner as the 8-inch clean-up box described later. A sample is taken every half hour of one shift each week. Plugs are pulled in succession from a series of holes in the side of the box and about a gallon of water and tailings is drawn from each into a bucket. The half-hour series of samples are combined, settled, and reduced in size before being shipped to Denver for determination of the contained gold.

Method of Cleaning Up

The sluice boxes are cleaned up by two men on day shift. The feed is shut off from one sluice at a time at the distributing box and each is cleaned in turn. The first 15 feet of each main sluice is cleaned up twice a week; the rest of the sluice, once a week. The main sluices are cleaned up by taking out one 3-foot section of riffles at a time and shoveling the concentrate into a bucket. No water is used. The bottom section of riffles is left in until the final cleaning is completed, as a precaution against flow of water and gravel down this sluice. The greater part of the gold is obtained from the upper 15 feet of the sluices. Pyrite from mill tailings is caught in the riffles, but it causes no trouble except occasionally when an unusually large

amount of tailings comes through the plant. Some iron oxide pebbles, shot, and the usual small hardware also are caught in the riffles.

The concentrate is cleaned in special clean-up boxes. The buckets of concentrate are dumped into a hopper. Water from a pipe connected to the fresh-water supply washes the concentrate into an 8-inch box 10 feet long with a screen with 1/16-inch holes 3/4 inch above the bottom. The screen oversize goes to a 6-inch box 16 feet long with riffles similar to those in the main sluice. The riffle sections are 3 feet long and fit the 6-inch box. The 8-inch box has grooves seven inches apart cut diagonally across the wooden bottom. At the lower end of each groove is a 1-inch round hole bored in the side of the box. Through these holes the screen undersize runs into another 6-inch box. This 6-inch box is made of iron; it is 16 feet long and has the same kind of riffles as the main sluice, except that the 3 sections at the head end have tight-welded bottoms. The concentrate from each section is emptied into buckets for further treatment in the clean-up house. Concentrate from the upper sections of the coarse clean-up box is hand panned, and rejects, together with concentrate from the lower section, are run through the same box several times; the final concentrate is taken to the clean-up house for amalgamation. Between an ounce and ten ounces of gold is recovered each week from the concentrate from the coarse clean-up box.

Each of the lower sluices is cleaned up weekly. The cloths are first rinsed in a tub and then scrubbed with a brush on a drain board. The concentrate is taken to the clean-up house for further treatment.

Method of Treating Amalgam and Sluice Concentrate

The weekly clean-up from the sluices usually consists of three 2-1/2-gallon buckets of fines, 1 bucket of coarse, and 6 buckets of cloth concentrate.

In the clean-up house the coarse concentrate is screened through a 3/32-inch screen and then through a 1/32-inch screen. The oversize from each screen is sorted for gold nuggets. The minus 3/32-inch plus 1/32-inch screen size is then panned with quicksilver. Less than 10 percent of the recovered gold is in the coarse sizes.

The fines are treated in an arrastre consisting of a 48-inch cast-iron bowl in which two iron shoes revolve. The riffle concentrate is ground 2 hours in the arrastre with quicksilver. About one-eighth of a pound of lye is added to each charge. The unscreened concentrate from the cloth is treated in the arrastre separately.

The concentrate from the arrastre is drawn off and panned. The amalgam is squeezed and retorted. The retort holds about 2 quarts of amalgam. The retort is lined with heavy paper and the bottom is chalked before being heated. Heat is supplied by a gasoline burner.

The charge is not melted in the retort, as the mint prefers to receive the sponge. The condenser is a 3/4-inch pipe 30 inches long. It is inside a 2-inch pipe, and is cooled by cold water circulating between the two pipes.

From 3,000 to 12,000 grams of amalgam are retorted weekly. From 5 to 15 percent of the amalgam represents gold recovered from the cloth riffles. The amalgam contains about 60 percent gold. The bullion is 850 to 860 fine in gold and about 140 fine in silver. It contains nearly enough silver to pay the mint charges.

The reject from the clean-up consists mainly of sulphides with some magnetite and garnet. It is saved for possible shipment. Most of the gold in the reject is probably carried in the sulphides. The heavy minerals with the gold cause no undue difficulties in the clean-up.

Recovery

The recovery of gold in the gold-saving plant is determined by sampling the heads and tails and averages about 90 percent. Based on comparative weights of amalgam, 93.2 percent of the recovered gold was obtained from the sluices and 7.3 percent from the corduroy table section. Corduroy was used only during 1936.

CAMP

The camp consists of 7 portable cabins accomodating 4 men each, an office in which the superintendent and assistant superintendent sleep, and a combined cook-house and dining room.

The buildings are of sectional design and are easily knocked down for moving; parts are bolted together. The camp has successively been moved to two new sites.

LIGHTING

Kohler lighting units are placed on the principal pieces of equipment and at the camp, as follows:

Camp - one 1,500-watt unit, fully automatic.

Washing plant - one 1,500-watt unit with seven 60-watt and one 200-watt drop lights. A 200-foot cord runs from this plant to the main pump.

Gold-saving plant - one 800-watt unit.

Draglines and shovel - each has a 1,500-watt unit. Two 200-watt drop lights back of reflectors and three 60-watt drop lights are used on each digging unit for night work.

OPERATION

Two 10-hour shifts are worked. Each crew misses one shift per week. The mine is shut down at 3 o'clock every Saturday afternoon, and is started again Sunday evening. Most of the men go to their homes for the week-end.

The average digging time during each 20-hour day is about 15 hours, or 75 percent.

During 1936 the plant operated 69.1 percent of the total shift hours. The delays, comprising 30.9 percent of the working time, were apportioned approximately as follows:

	Percent
Screening plant:	
Moving	20.8
Engines	8.9
Pumps	4.4
Feeder screen and conveyor	7.5
Lubrication	1.6
Gold-saving plant:	
Moving	5.6
Water and pipe-line system	10.0
Draglines	3.4
Shovel	1.0
Cold weather (April to May)	8.9
Sundry	27.9
Total	100

LABOR

The amount and cost of labor in September 1936 was as follows:

4 dragline runners	$1.00	per hour each
2 shovel runners	1.00	do.
2 washing plant operators	.70	do.
2 washing-plant helpers	.50	do.
2 gold-saving-plant operators	.60	do.
2 gold-saving-plant helpers	.50	do.
2 pumpmen	.60	do.
1 oiler and panner (day only)	.60	do.
1 oiler (day only)	.50	do.
2 clean-up men (day only)	.60	do.
2 gasoline-car operators	.50	do.
1 timekeeper	150.00	per month
1 foreman		
1 assistant superintendent		
1 superintendent		
26		

Some of the men go to their homes each night but most of them live on the job and go out once a week. Room and board costs $1.35 per day.

In addition to the mining crew, a drilling crew of 8 men and a boss working on 3 shifts per day is employed to sample additional ground ahead.

POWER

The entire plant uses about 600 gallons of gasoline, 50 gallons of Diesel oil, and 13-1/2 gallons of lubricating oil daily. The gasoline is bought in 6,000-gallon tank-car lots and is delivered to the job by the railroad. It is stored near the workings in two 5,500-gallon tanks. The Diesel fuel is bought in drums. A pump driven by a 6-horsepower gasoline engine pumps the gasoline to the head of the pit through a 1-1/2-inch pipe-line. A 150-foot gasoline hose at the end of the pipe is used for fueling the two draglines, the washing plant, and the main pump. In September 1936 the gasoline (without road tax) and Diesel fuel each cost 10-1/2 cents per gallon laid down at the plant.

The engine set-up is as follows:

	Horsepower
Water supply:	
8-inch pump	115
4-inch pump	50
Excavators:	
2 Draglines	150
	150
Shovel	130
Washing and screening plant:	
Tractor	150
Stacker and feeder	40
Trommel	50
Sand pump	150
Gold-saving plant:	
Tractor	90
Sand pump (occasional use only)	40
Gasoline pump	6
Arrastre	1
Total	1,122

In addition, there are five 1,500-watt and one 800-watt lighting plants and a gasoline-powered welding unit on the job.

COSTS

Costs of Mining

The costs of mining varied with the operating conditions, such as width and character of gravel (costs were higher when only one of the two draglines could be used) and water supply. Direct operating costs ranged from 12 to 20 cents per cubic yard, bank measure, before depreciation and between 15 and 25 cents after depreciation but not including depletion.

Cost of Plant

The cost of the plant was approximately as follows:

Two 2-1/2-yard gasoline draglines.....	$ 40,300
One 1-1/4-yard Diesel shovel.....	19,900
4 dragline buckets.....	6,000
Screening and gold-saving plants.....	70,000
Water-supply equipment.....	3,500
Clean-up equipment.....	1,000
Other equipment.....	6,500
Total.....	$147,200

AFTER THIS REPORT HAS SERVED YOUR PURPOSE AND IF YOU HAVE NO FURTHER NEED FOR IT, PLEASE RETURN IT TO THE BUREAU OF MINES. THE USE OF THIS MAILING LABEL TO DO SO WILL BE OFFICIAL BUSINESS AND NO POSTAGE STAMPS WILL BE REQUIRED.

UNITED STATES
DEPARTMENT OF THE INTERIOR
BUREAU OF MINES

OFFICIAL BUSINESS

RETURN PENALTY LABEL

THIS LABEL MAY BE USED ONLY FOR RETURNING OFFICIAL PUBLICATIONS. THE ADDRESS MUST NOT BE CHANGED

PENALTY FOR PRIVATE USE TO AVOID PAYMENT OF POSTAGE, $300

BUREAU OF MINES,

WASHINGTON, D. C.

I. C. 7013 MAY 1938

UNITED STATES
DEPARTMENT OF THE INTERIOR
HAROLD L. ICKES, SECRETARY

BUREAU OF MINES
JOHN W. FINCH, DIRECTOR

INFORMATION CIRCULAR

POWER-SHOVEL AND DRAGLINE PLACER MINING

BY

E. D. GARDNER AND PAUL T. ALLSMAN

AFTER THIS REPORT HAS SERVED YOUR PURPOSE AND IF YOU HAVE NO FURTHER NEED FOR IT, PLEASE RETURN IT TO THE BUREAU OF MINES, USING THE OFFICIAL MAILING LABEL ON THE INSIDE OF THE BACK COVER.

I.C. 7013
May 1938.

INFORMATION CIRCULAR

UNITED STATES DEPARTMENT OF THE INTERIOR - BUREAU OF MINES

POWER-SHOVEL AND DRAGLINE PLACER MINING[1]

By E. D. Gardner[2] and Paul T. Allsman[3]

CONTENTS

	Page
Introduction	2
Acknowledgments	3
History and development	3
Application of methods	6
General	7
Plant lay-outs	9
Floating plants	9
Jasper and Stacey	23
Movable land plants	24
Pantle	38
Humphreys, Clear Creek	39
Humphreys, Virginia City	41
Jett-Ross	42
Dixie	42
Blackhawk	43
Alaska	44
Stationary plants	44
Ash Canyon	45
Chittendon	45
Von der Hellen	46
Guerin	47
Wallace	48
Rhyolite	49
La Grange	50
Excavating equipment	51
Draglines and power shovels	51
Cables	51
Teeth	52
Bulldozers	53

1/ The Bureau of Mines will welcome reprinting of this paper, provided the following footnote acknowledgment is used: "Reprinted from Bureau of Mines Information Circular 7013."

2/ Supervising engineer, Metal-Mining Section, Mining Division, Bureau of Mines, Tucson, Ariz.

3/ Associate mining engineer, Metal-Mining Section, Mining Division, Bureau of Mines, Berkeley, Calif.

6429

CONTENTS - Continued

	Page
Power	56
Water	59
Labor	60
Sampling and recovery	60
Costs	63
Cost of plants	63
Cost of mining	67
Summary	68

ILLUSTRATIONS

Figure		Following page
1.	Typical set-ups for floating washer and excavator	8
2.	Typical set-ups for movable dry land washers and excavators	8
3.	Typical set-ups for stationary washing plants and excavators	8
4.	Essential features of a floating washer and gold-saving plant	8
5.	Flow sheet of Jasper Stacey boat	22
6.	Essential features of movable land washing and gold-saving plants	24
7.	Jett-Ross movable gold washer and sluice	42
8.	Flow sheet	42
9.	Methods of rebuilding dipper teeth	52

INTRODUCTION

This is one of a series of papers being published by the Bureau of Mines on placer mining; it is written as a supplement to Information Circular 6788, "Placer Mining in the Western United States, Part III", by E. D. Gardner and C. H. Johnson, which was published in February 1935.

Since Information Circular 6788 was written (1933), considerable advance has been made in the technique of mining placer gravels with power shovels and draglines. Although new washing plants continue to be built in accordance with untried designs, the trend of new installations is toward proved equipment. A substantial number of plants are now being operated successfully (1937).

This paper describes various phases of placer mining where the gravels are excavated by draglines and power shovels. It is based principally upon original data collected by the authors in the summer of 1936 and spring of 1937 and in part upon available published information upon the subject.

ACKNOWLEDGMENTS

The operators in the field generously supplied information about their plants. Credit is given in the text to authors from whose published articles material has been abstracted.

HISTORY AND DEVELOPMENT

In the early days of placer mining, deposits of gold-bearing gravels were found that could not be hydraulicked or worked by hand. The principal result of efforts to work such deposits mechanically has been the development of the gold bucket-line dredge. The first efforts were mainly unsuccessful, but the modern gold dredge is an efficient machine and accounts for most of the placer gold produced.

During the past 45 years steam shovels and other mechanical excavators have been used for mining gravel deposits not susceptible to dredging. The technique of dragline and power-shovel mining, however, has not been developed to a comparable degree with dredging. Most of the operations have been spasmodic and, except in relatively few cases, unsuccessful up to about 1934.

Beginning in 1931 and 1932, general interest in placer mining increased greatly; fresh impetus was given to the industry by the increase in the price of gold to $35 per ounce in 1933. As a part of the expansion in placer mining, a large number of operations were begun in which mechanical equipment was used for mining the gravel, which was washed in separate plants. Most of the early plants were unsuccessful, but as experience has been gained in their design and selection of equipment, the proportion of failures has declined steadily; however, up to 1937 the majority (probably 80 percent) had not been profitable.

Placer gravels are excavated mechanically by (1) bucket line dredges, (2) tractors pulling scrapers, (3) bulldozers, (4) buckets or scrapers pulled by hoists, and (5) dragline excavators and power shovels. Dredging is a field in itself, and the second, third, and fourth methods up to the present are relatively unimportant; this paper is concerned only with dragline or power-shovel operations. The washing plants may be of three types - floating, movable on land, and stationary. All three are considered in this paper.

The following tabulation shows the relative yardages handled by the dredges, the separate floating washing plants, and the movable land and stationary plants in California in 1935, the last year for which figures are available.[4]

4/ Data supplied by Chas. W. Merrill, acting supervising engineer, Min. Prod. and Econ. Division, Bureau of Mines, San Francisco, Calif.

Kind of operation	Cubic yards	Average value of gold recovered per cubic yard of gravel
Dredges.....	77,282,173	$0.117
Floating washing plants.....	3,405,566	.212
Movable land and stationary plants.	426,575	.559
Total and average	81,114,314	.123

More floating washing plants than any other type are used; most of these boats are in California. In March 1937, 20 California boats were visited by the authors. In addition, one at Hayfork, Trinity County, Calif., and another near Jacksonville, Jackson County, Oreg., were in operation but temporarily shut down because of bad weather; they were not visited. Three other plants were being moved in California at the time of the survey. A floating plant was visited in the spring of 1936 near Helena, Mont., and one near Prescott, Ariz., a third at Pinecliff, Colo., and a fourth at Fairplay, Colo., in the summer of 1937.

The Bodinson Manufacturing Co. of San Francisco, builders of most of the California floating plants, and Harry F. England of Oroville, Calif., are largely responsible for the development of the boats now in use. Kumle was using a homemade wooden floating plant, however, at Oregon House, Calif., and Hofford and Johnson a more elaborate plant at Sumpter, Oreg., in 1932.5/ The Hofford and Johnson washing plant was a dredge from which the excavating unit had been removed. The gravel was dug by a dragline on the bank. With the exception of being heavier and more expensive, this plant was quite similar to the boats now in use in California. A successful plant on Lynx Creek, near Prescott, Ariz., was developed independently and concurrently with the California boats.

Standard washing, screening, and gold-saving equipment similar to that used on bucket-line dredges is employed on the floating plants and permits continuous operation.

The first successful movable washing plant that has come to the authors' attention was installed by the E. T. Fisher Co. at Atlantic City, Wyo., in 1933;6/ it was equipped with a standard dredge trommel and dredge riffles. Since 1933, a number of other successful movable plants have been put in operation.

Relatively few stationary plants are used; the field for this type of plant is more limited than for the floating or movable land plant.

5/ Gardner, E. D., and Johnson, C. H., Placer Mining in the Western United States, Part III.: Inf. Circ. 6788, Bureau of Mines, 1935, p. 6.
6/ Ross, Charles L., and Gardner, E. D., Placer-Mining Methods of E. T. Fisher Co., Atlantic City, Wyo.: Inf. Circ. 6846, Bureau of Mines, 1935, p. 2.

Most of the unsuccessful ventures owe their failure to inadequate sampling of deposits; the gravel did not contain the anticipated amount of gold. Other factors contributing to failure have been poor washing-plant design, selection of a set-up not adapted to the deposit, and lack of experience. Although this type of mining is primarily a dirt-moving job, only a few of the excursions into the field by excavating contractors and sand and gravel men have proved successful. The majority of the unsuccessful ventures have been run by men without previous placer-mining experience; most of the successful ventures are run by men with this experience.

To be successful, gold must be recovered at low cost per cubic yard of gravel, and the success of most of the enterprises is determined by the number of cubic yards handled per man shift. A successful plant must be designed to fit existing conditions; proven equipment is used by virtually all of the successful operators.

The excavating machines are built by established responsible companies; mechanical "bugs" have been largely eliminated. On the other hand, washing and gold-saving equipment and plant practice have not been standardized, and nearly every new plant, except the floating plants in California, is built according to an original design; many contain untried innovations.

The most efficient screening and washing device for placer mining is the trommel of the type used on dredges. As far as is known to the authors, no installations using flat screens for washing and fine sizing of placer gravels have proved successful. Riffles, as used on dredges, are efficient in recovering gold, except fine or flaky rusty particles. Jigs have been used as an auxiliary to riffles to increase the over-all extraction in some places. There are numerous other gold-saving devices, but, with the exception of the Ainlay bowl, none of these have proven successful in practice, principally because of their limited capacity.

Although sufficient experience has been accumulated to ascertain the best type of equipment for any particular deposit, few inexperienced placer operators avail themselves of this knowledge. The manner in which otherwise successful businessmen will spend money in building untried placer plants is astonishing. A so-called movable placer machine, which was designed and built in the east at a cost of $30,000 and shipped to the southwest in late 1936, is an absurd example. Anyone with a fundamental knowledge of placer mining could have told at a glance that it was foredoomed to failure. Nearly everything about it appeared to be designed so it could not be successful. Power was supplied by an expensive Diesel-electric unit mounted on the plant in a position where it would get the most slop. The plant contained no scrubber. All the washing was to be done on a set of flat screens; most of the material to be handled was clayey and the gravel was largely flat and angular. The material was to be screen-sized down to minus 1/32 inch. The minus 1/2-inch plus 1/32 was to be treated in Ainlay bowls, and the minus 1/32-inch in a newly patented gold saver where the pulp was to be forced through a bath of quicksilver.

The tail sluice discharged 2 feet above the gravel at the front end of the machine; the discharge would be at the digging face if the machine was used in the pit, or at the brink of the bank if used on top. After moving the power unit to a stationary location and making other alterations, an attempt was made to run the plant. Seven cubic yards, which was put through the first day, occasioned a loss of 40 pounds of quicksilver. During the second and last day, the designer of the plant and inventor of the quicksilver gold saver ran the plant and only 15 pounds was lost in treating 10 cubic yards. The investment was then written off. A few coarse colors were saved in the Ainlay bowl. This could have been saved, however, by a few cross riffles in the sluice leading to the bowls. Not enough fines could be put through the quicksilver gold saver to ascertain whether any recovery was made in the device or not.

APPLICATION OF METHODS

Areas suitable for mining by methods discussed in this paper consist essentially of small, shallow deposits too small to amortize the cost of bucket-line dredges, too low-grade to be worked by hand methods, and unsuited to hydraulic mining. Each deposit is a problem in itself and the type of equipment must be selected and methods of treatment adapted to fit the particular conditions. In some cases a balance must be struck between lower operating costs attainable with dredges and lower first costs at plants using separate excavators. The operating costs per cubic yard at plants of the latter type usually are at least double that for dredges. Generally the costs at mines using floating washing plants are less than at those with movable land plants of similar capacities which in turn are less costly to operate than lay-outs with stationary plants. The latter involve an additional cost of transporting gravel.

The character and depth of the gravel and the character of bedrock is a determining factor in the selection of the floating type of washing plant. The gravel must be amenable to digging with draglines as these machines are used with floating plants. As the depth of gravel increases, larger equipment is needed on floating plants. Deep ponds must be maintained in working the higher banks to keep the boat from grounding on the sand tailing, or this material must be disposed of back of the pond. Moreover, long conveyors are needed for stacking the oversize rock. At one mine, difficulty was reported in digging the gravel in over 14 feet of water. The average depth of gravel washed in floating plants is 10 to 12 feet; the maximum is about 20 feet, although a few deposits are worked to a slightly greater depth.

Digging is under water, and under the best conditions more gold is lost than in dry pits. This additional loss of gold is balanced against higher costs with other types of plants. A rough, hard bedrock cannot be cleaned adequately under water by draglines; it would preclude the use of a floating plant. In addition to water for washing, the floating plant requires a pond to float the boat. The water flows from the pond through the loose gravel rapidly, and a steady inflow is necessary to replenish it.

The gravels treated in movable plants may be dug either with draglines or power shovels, depending upon the character of the deposit. With the former, the plant may be either on the bank or in the pit; with the latter, the plant must be in the pit, as a shovel cannot reach the hopper of a plant on the bank. Excavation can be carried to a greater depth in dry pits than under water. In mining deep deposits, the stacker on the treatment plant should be long enough to dispose of the tailing far enough back so that the active areas are not crowded; usually, this is not the case with new designs.

Stationary plants generally are used for treating gravels of unusual depths or in scattered deposits. They may also be used for treating gravels from pits that would be difficult to keep drained if a movable plant were employed. The gravel can be mined with the type of excavator best suited to the deposit and the pit laid out to the best advantage for digging.

GENERAL

A dragline is always used with a floating plant. The excavating unit used with a movable land plant usually is a dragline, although occasionally a power shovel is used as the primary digging unit or as an auxiliary to the dragline. A dragline is always worked from the bank and a shovel in the pit. The washing plant may be placed either in the pit or on the bank when a dragline is used. The plant is placed in the pit behind the power shovel when that digging unit is used. The dragline working on the bank permits the plant to be kept near the working face, thereby shortening the pit and permitting a shorter swing. The hopper can be constructed at the top of the plant, permitting the gravel to flow entirely by gravity through the plant. The dragline has an advantage over the shovel, in that a much larger area can be dug from each position, due to the longer boom and throw of the bucket; therefore, less time is lost due to moving. The plant will not have to be moved as often for the same reasons.

Where the washing plant is placed on the bank, the capacity of a dragline is decreased because of the longer swing necessary from the digging face to the hopper of the plant. Other conditions, however, occasionally make it expedient to use the plant on the bank.

In easy-digging gravel, a dragline has a greater capacity than a shovel of like dipper capacity; a shovel makes a maximum swing with the dipper of 180° when discharging into a plant in a pit. A shovel is preferred in tight or bouldery ground. Because of its rigidity and the proximity of the operator to the working face, it has a more positive control than the dragline. Moreover, boulders can be more easily sorted out and set aside. It is usually necessary to take up from a few inches to 2 or 3 feet of bedrock to recover all of the gold. This can be done better with a shovel than a dragline. Occasionally, a deposit may have a rough hard bedrock that cannot be cleaned effectively with a dragline. Bedrock is more effectively cleaned by draglines in dry pits than under water. A shovel may be used in a pit as an auxiliary digging unit to dig out hard ribs, clean the bottom, and clean out corners that the dragline is unable to reach.

Although the power shovel and the dragline excavator each have a separate and distinct field of operation in the type of placer mining discussed here, intermediate types of deposits are found where conditions may warrant the use of either.

Most gravel deposits contain barren or low-grade overburden of varying thickness. Usually, it is found unprofitable to strip off this overburden and discard it, and it is dug and washed along with the enriched gravel. In order to strip the waste at most of the placers, washing operations would have to be suspended while this work was being done, or an extra digging unit provided; at others it may be impossible to find a suitable place to dispose of the waste. Occasionally, a tractor with a bulldozer blade is used to push aside a few feet of barren clay or soil from the surface; moveover, some operators have found it profitable, when the thickness of overburden is appreciable, to do stripping on one shift and digging and washing on the other two or some other combination, alternating the periods of stripping and digging. When the excavating unit has a capacity greatly in excess of the washing plant, some operators find it practicable to strip and keep the plant at capacity at the same time.

Areas in California suitable only for small mechanical placer operations generally occur along or near the foothills of mountain ranges. Most of them are in or near the beds of small streams and have been formed by the erosion and redeposition of older Tertiary gravel.

The California deposits discussed here are, roughly, in five groups: (1) Camanche, Calaveras County; (2) Lincoln, Placer County; (3) Oroville, Butte County; (4) Redding, Shasta County, and (5) McConnell bar on the Klamath River in Siskiyou County. With the exception of one operation near Camanche, one at La Grange, and those on the Klamath River, the gravel is shallow, fairly easy digging, and sufficient water is available to maintain operations of the floating-boat type. Near Lincoln, two movable land plants and one stationary plant were being used, owing chiefly to the availability of this type of equipment rather than to gravel or water conditions. The operator at Camanche, working bench gravel, was using a power shovel to dig and overcast gravel that was too tight to dig with a dragline. A pond was maintained a short distance back of the shovel, and the loosened gravel was dug and washed by a dredge with a light bucket line. At La Grange, bench gravels were deep and tight and required a shovel for excavation. At McConnell bar, although water is plentiful, the gravel ranges in depth to about 40 feet, is tight, and contains numerous large boulders; a shovel was used.

Other plants visited were at scattered localities. A considerable number (probably twice as many as listed in this paper) had been in operation between 1932 and 1936 but either had finished washing or were unsuccessful at the time the authors were in the field.

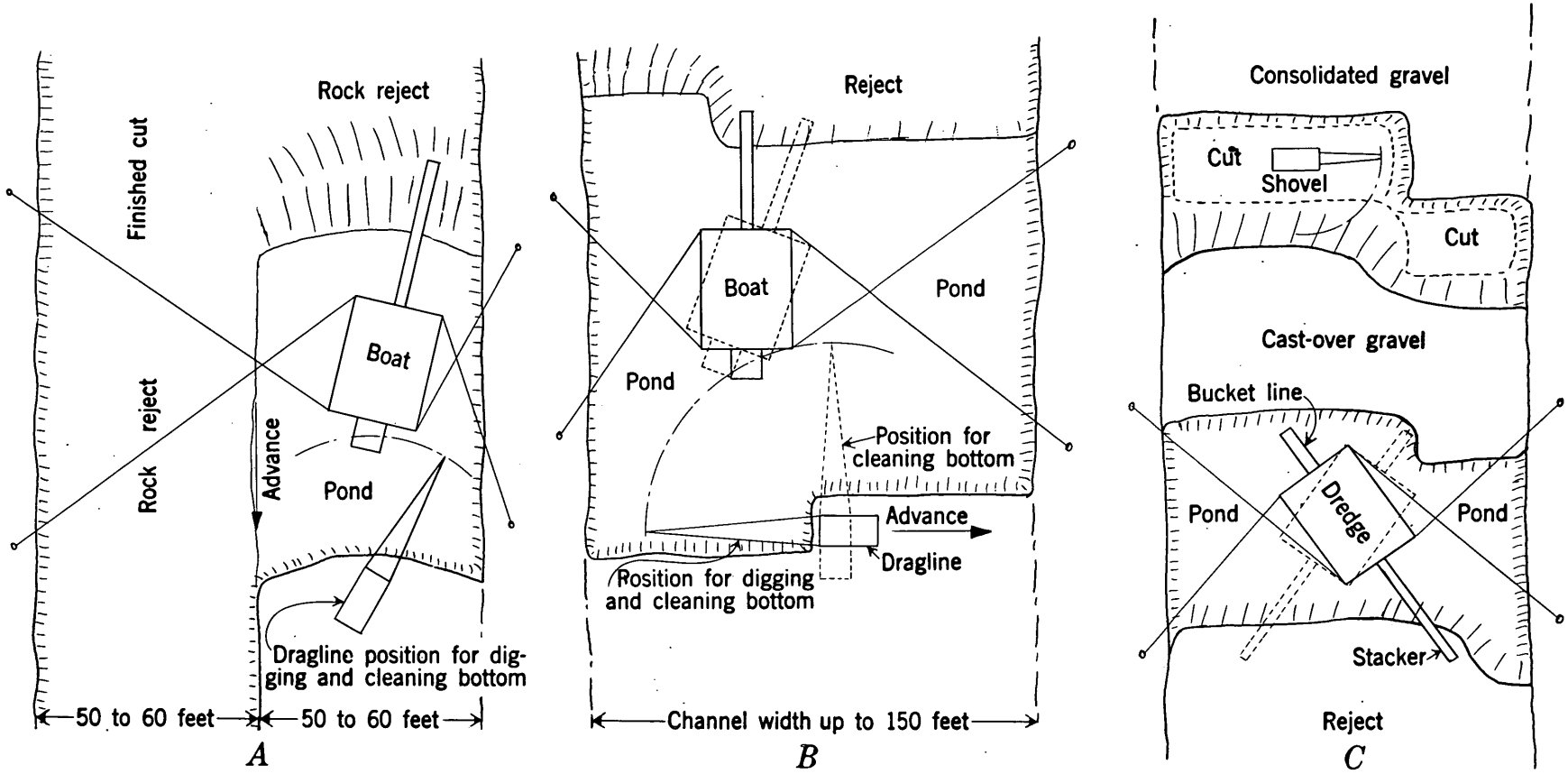

Figure 1.—Typical set-up for floating washer and excavator (not drawn to scale).

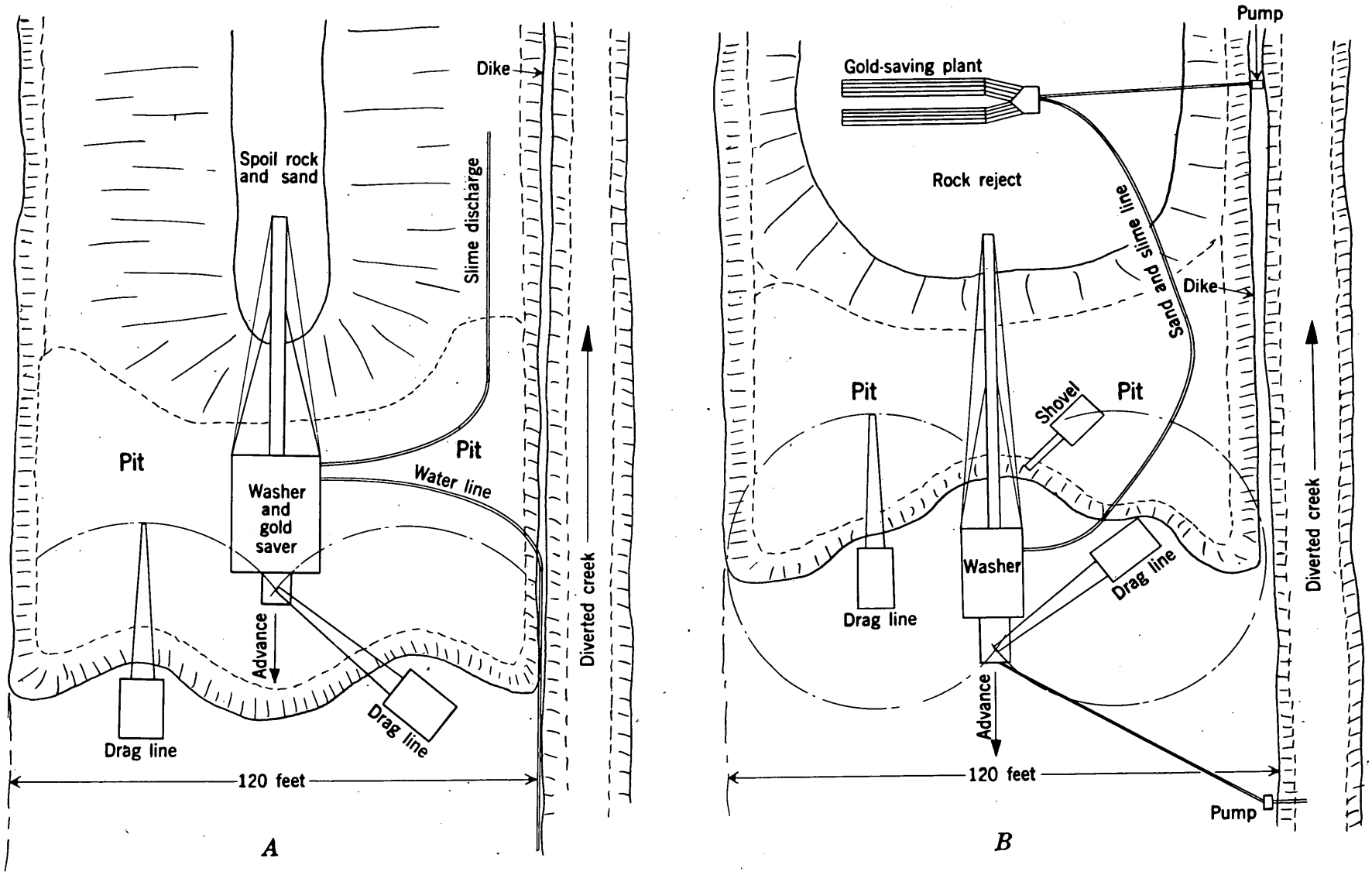

Figure 2.—Typical set-ups for movable dry land washers and excavators (not drawn to scale).

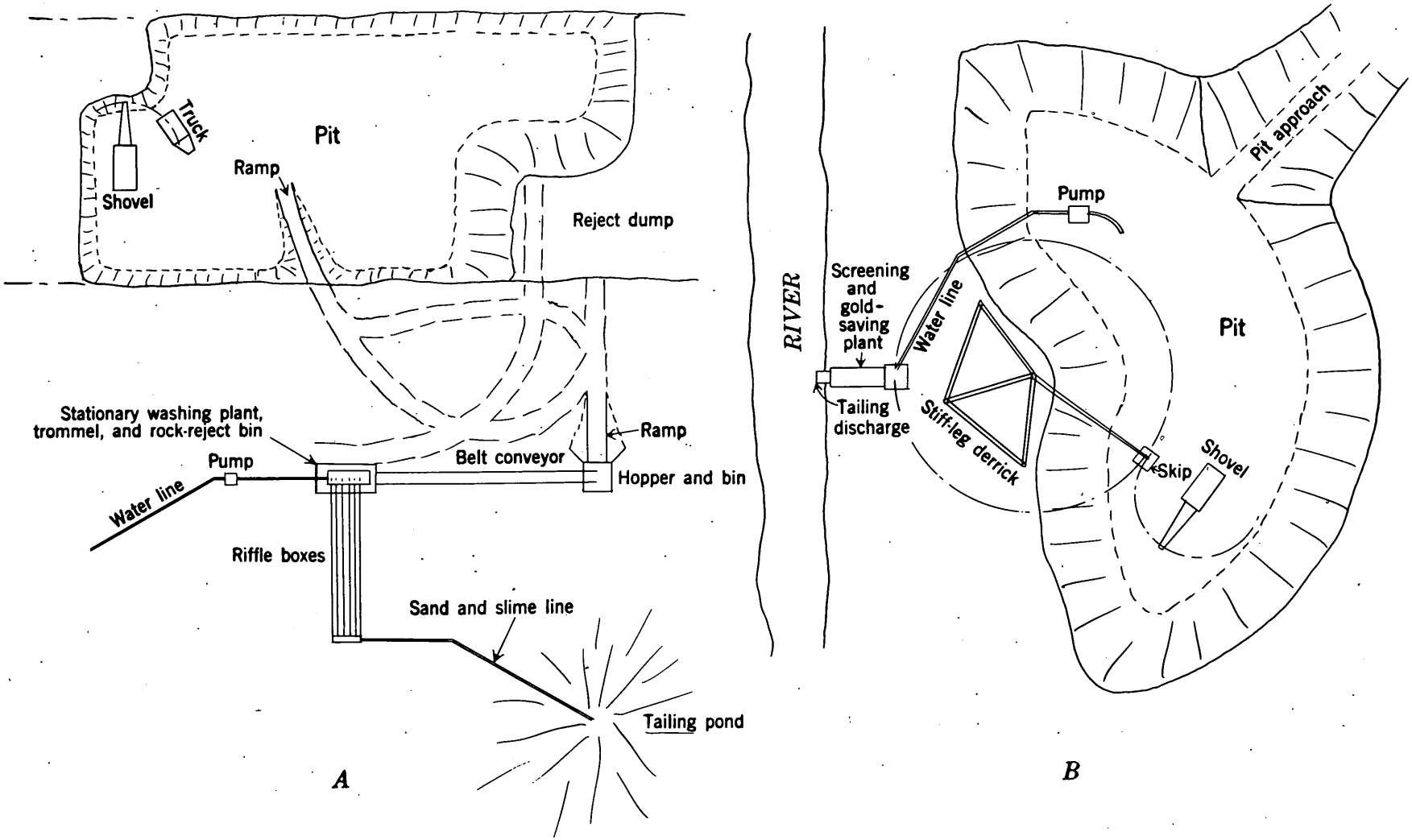

Figure 3.—Typical set-ups for stationary washing plants and excavators (not drawn to scale).

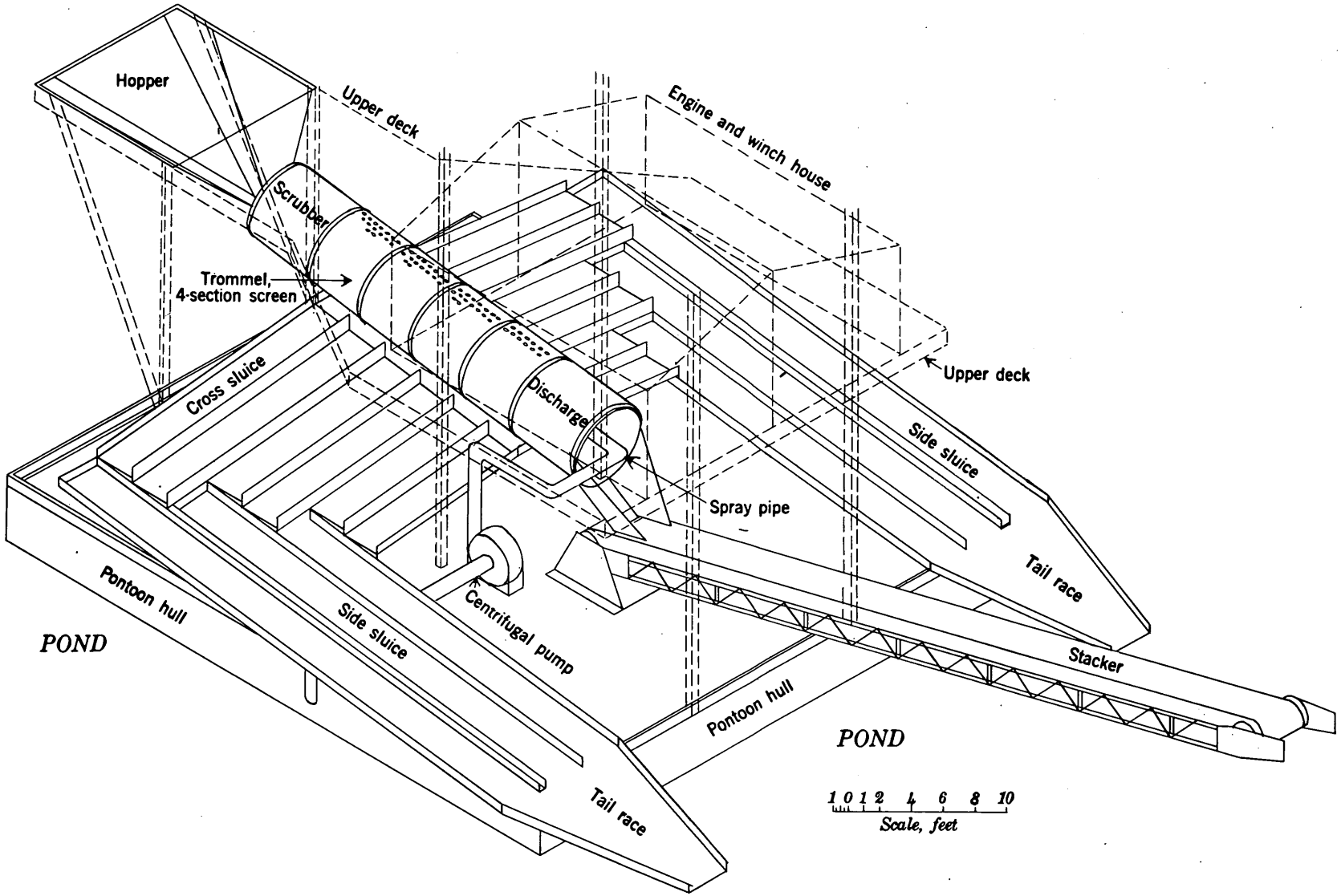

Figure 4.—Essential features of a floating washer and gold-saving plant.

PLANT LAY-OUTS

Figure 1 (A and B) shows the usual lay-outs with draglines and floating treatment plants. Figure 1C shows an unusual lay-out (at the Folsom plant, Jenny Lind, Calif.) where the gravel is first dug by a shovel and then handled in a dredge with a light bucket line.

Two general methods of attack are common where the gravel is dug under water - (1) following the channel with one or more cuts (fig. 1A) the excavator advances in a straight line, (2) advancing by taking successive 15- to 20-foot cuts back and forth across the channel (fig. 1B).

When the channel is 50 or 60 feet wide, it may be taken in a single straight-line cut. Under the plan shown in figure 1B, the channel usually is taken in one section when 150 feet or less in width; if wider, two or more sections may be mined.

The dragline that travels along the bank has an advantage over the one that travels forward in a straight line, as bedrock may be scraped from one or more angles (fig. 1B). Gold recovery under water is undoubtedly improved in any method that permits the bedrock to be cleaned and dug in two or more directions. Neither set-up has an advantage in the length of the swing of the loaded bucket to the hopper as the boat may be arranged to make either distance a minimum.

Digging may progress either up or down stream; advancing upstream has the advantage since the muddy waste water has a chance to clarify by settling behind dams and by filtering through the loose gravel.

Figures 2A and 2B show typical combinations of draglines and movable dry land washing plants.

Figure 3A is a typical set-up used at pits where placer gravel is transported to a stationary washing plant and rock reject is dumped back into the pit. Figure 3B is an unusual small layout with a shovel in the pit, a stiff-leg derrick, hoist, and a stationary washing plant.

FLOATING PLANTS

Tables 1 to 4 give information on the gravels, excavators, and treatment plants, and operating data on placer mines where the gravel is excavated by draglines and the gold is recovered in floating plants.

All the mines with floating plants visited, except the Prickly Pear in Montana, the Lynx Creek in Arizona, and the Cooley and Fairplay in Colorado, are in California. All except the Jasper-Stacey dredge use essentially the same flow sheet. Most of the plants were built by the same manufacturer. Gravel is washed in a revolving screen; the undersize is distributed to a bank of cross tables on each side of the trommel, from which it discharges into banks of longitudinal sluices on each side, and finally flows to the pond at the rear of the boat. Gold is collected in Hungarian-type riffles installed in the sluices. The oversize is discharged from the trommel to a stacker belt and piled at the rear. Figure 4 shows the essential features of a typical floating plant.

TABLE 1. - General data on placer operations using floating treatment plants.

Mine				
Name	Situation	Date	Operator	Stripping feet
Lynx Creek	Prescott, Ariz.	1937	H. A. Savage.	2
Fay	Lincoln, Calif.	1937	Fay Placers.	0
Jasper-Stacey	do.	1937	Jasper and Stacey.	0
Clark	do.	1937	Lincoln Dredging Co.	0
Consuelo	Oroville, Calif.	1937	Max Hoffman.	0
Cotes	do.	1937	Butte Gold Dredging Co.	-
Richter	do.	1937	Wm. Richter & Sons.	0
Cinco Mineros	do.	1937	Cinco Mineros.	0
Penn	do.	1937	Penn Dredging Co.	1-1/2
England[1]	do.	1935	Wyandotte Gold Dredging Co.	0
Midland	Cottonwood, Calif.	1937	Midland Co.	0
Gold Acres	do.	1937	Gold Acres Dredging Co.	-
Pioneer #1	Redding, Calif.	1937	Pioneer Gold Dredging Co.	0
Pioneer #2	do.	1937	do.	0
Pioneer #3	do.	1937	do.	0
Carlson Sandburg	do.	1937	Carlson & Sandburg Co.	0
Olson	do.	1937	R. S. Olson	0
Collins	do.	1937	A. C. Mining Co.	0
Folsom[2]	Jenny Lind, Calif.	1937	A. R. Folsom Dredge	0
Lilly	Milton, Calif.	1937	E. L. Lilly	0
Schwegler	do.	1937	Milton Gold Dredging Enterprise	0
Cooley	Pinecliff, Colo.	1937	Cooley Gravel Co.	1-1/2
Fairplay	Fairplay, Colo.	1937	Beaver Creek Placer Corporation	0
Prickley Pear	Helena, Mont.	1936	Winston Bros. Co.	0

(See footnotes on page 11.)

TABLE 1. - General data on placer operations using floating treatment plants. - Continued

	Gravel				Bedrock		
Name	Average depth, feet	Physical character	Boulders over 12 inches	Clay, percent	Kind	Character	Depth mined, inches
Lynx Creek	16	Easy digging.	2%	None	Caliche	Flat, even	6 to 18
Fay	10 to 12	do.	0	Small	Granite	Flat, uneven	18 to 24
Jasper-Stacey	8	do.	0	do.	do.	—	do.
Clark	8	do.	0	10	do.	—	12
Consuelo	3-1/2 to 8	Easy digging.	0	Small	Soft sandstone	—	None.
Cotes	-	-	-	-	-	—	-
Richter	12	Easy digging.	0	25	Soft clay	Rolling	Variable.
Cinco Mineros	12	do.	0	15	Soft porphyry	do.	12 to 14
Penn	10 to 20	Medium hard.	0	10	Greenstone	do.	-
England1/	-	Easy digging.	-	-	Lava ash	—	-
Midland	7-1/2	do.	0	Small	Sandy hard pan	—	6 to 8
Gold Acres	-	-	-	-	-	—	-
Pioneer #1	6 to 8	Easy digging.	0	-	Clay	—	6
Pioneer #2	6 to 8	do.	0	-	do.	—	6
Pioneer #3	7	do.	0	-	do.	—	6
Carlson Sandburg	13	Medium digging.	0	Small	Clay, gravel	—	-
Olson	6-1/2	Easy digging.	0	10	Clay	Rolling	6
Collins	11	do.	0	High	Porphyry	—	18
Folsom2/	9	Hard digging.	0	2	-	—	-
Lilly	8	Medium tight.	Few	10	Soft clay	Rolling	12
Schwegler	4-1/2 to 12	do.	0	10	Tuff	—	6
Cooley	16		0	-	Decomposed granite		6 to 18
Fairplay	3/21	Easy digging.	Few	-	Granite	—	0
Prickley Pear	8 to 9	Easy digging.	Up to 10 tons	-	Granite	Rough	-

1/ Data extracted from publication by James F. Magee, A Successful Dragline Dredge, A.I.M.E. Tech. Pub. No. 757, 1936.

2/ Gravel is dug and cast aside with a gasoline power shovel; it is picked up and washed in a light bucket-line floating dredge.

3/ Twelve feet of gravel left unmined on bedrock as too deep for plant to handle.

TABLE 2. - Draglines at placer operations using floating treatment plants.

	Capacity of bucket, cubic yards	Length of boom, feet	Horse-power of engine	Type of engine	Cables					
					Hoist			Drag		
					Diam-eter, inches	Length, feet	Length of service, hours	Diam-eter, inches	Length, feet	Length of service, hours
Lynx Creek	1-3/4,1-1/2	61, 60	75,175	Electric gasoline	-	-	-	-	-	-
Fay	1-1/2	50	135	Diesel	7/8	240	800	7/8	120	200
Jasper-Stacey	1-3/4	50	75	Electric	7/8	107	800	1	64	188
Clark	1-1/2	60	135	Diesel	-	-	-	-	-	1/ 200
Consuelo	1-1/4	55	130	do.	3/4	113	700	3/4	58	-
Cotes	1-1/2	50	135	do.	7/8	-	-	7/8	-	-
Richter	1-1/4	40	75	do.	7/8	100	-	1	55	-
Cinco Mineros	1-1/2	50	130	do.	1	-	-	1	-	1/ 180
Penn	2-1/4	80	125	do.	1-1/2	190	Up to 3,000	1-1/8	100	Up to 300
England	1-1/4	60	102	do.	-	-	-	-	-	-
Midland	1-1/4	45	-	do.	3/4	95	165	7/8	52	115
Gold Acres	1-1/2	50	-	do.	3/4	-	160	7/8	-	115
Pioneer 1	1-1/2	50	75	do.	-	-	-	-	-	-
Pioneer 2	1-1/2	45	85	do.	-	-	-	-	-	-
Pioneer 3	3	65	125	Electric	-	-	-	-	-	-
Carlson-Sandburg	1-1/4	50	130	Diesel	7/8	-	400	1	-	175
Olson	1-1/2	50	95	do.	7/8	-	450	1	-	220
Collins	1-1/2	50	120	do.	7/8	-	150	1	-	150
Folsom	1	-	85	Gasoline	7/8	-	900	0	0	0
Lilly	2 and 2-1/2	50	123	Diesel	7/8	-	400	1	-	250
Schwegler	1-1/2	50	121	Electric	7/8	60	-	7/8	112	-
Cooley	1-1/2	45	80	Diesel	3/4	60	-	7/8	110	-
Fairplay	2-1/2	70	215	Gasoline	7/8	-	600	7/8	85	200
Prickly Pear	2-1/2	70	120	Diesel	-	-	600	-	-	400

1/ Hoist cables in service are cut in two and used as drags as the drags wear out; only new hoist cables are purchased.

TABLE 3. - Floating treatment plants; general data and gold-washing and gold-saving equipment.

	Type of plamt	Hull			Hopper	
		Kind of pon-toon	Dimensions, feet	Draft, inches	Dimensions, feet	Spacing of grizzly bars, inches
Lynx Creek	Grizzly, trommel, sluice	Wooden	50 by 46 by 5	40	10 by 10	10
Fay	do.	do.	40 by 30 by 2-2/3	24	10 by 12	8
Jasper-Stacey	Grizzly, trommel, sluice, jigs, plates	Steel	50 by 50-1/2 by 2-1/4	-	-	-
Clark	Grizzly, trommel, sluice,	-	30 by 28 by 3-5/12	36	9 by 10	14
Consuelo	do.	Wooden	17 by 35 by 3	28	8 by 5	10
Cotes	do.	Steel	25 by 38 by 2-1/2	-	11 by 11	12
Richter	do.	Wooden	30 by 30 by 4-1/2	42	10 by 10-1/2	12
Cinco Mineros	do.	do.	32 by 42 by 3-1/2	32	-	24
Penn	do.	do.	30 by 40 by 3-1/6	24	-	24
England	Grizzly, trommel, sluice,	-	-	28	10 by 10-1/2	14
Midland	do.	Wooden	25 by 40 by 3	24	10 by 10	16
Gold Acres	do.	do.	30 by 40 by 4	36	-	18
Pioneer 1	do.	do.	26 by 38 by 3-1/2	30	-	-
Pioneer 2	do.	do.	26 by 38 by 3-1/2	30	-	-
Pioneer 3	do.	Steel	32 by 35 by 3-1/2	30	-	-
Carlson-Sandburg	do.	Wooden	34 by 42 by 3-1/2	22	-	14
Olson	do.	-	30 by 40 by 3-1/2	40	-	13
Collins	do.	-	30 by 40 by 3-1/2	26	10 by 12	18
Folsom	Bucket line, trommel, sluice	-	28 by 38 by 3	20	0	0
Lilly	Grizzly, trommel, sluice	Steel	40 by 36 by 3	30	10 by 10	14
Schwegler	do.	Wooden	40 by 35 by 3	26	12 by 14	12
Cooley	do.	-	40 by 34 by -	-	10 by 10	16
Fairplay	Trommel, sluice	Wooden	28 by 48 by 2-1/2	18	-	0
Prickly Pear	Trommel, sluice	Wooden	28 by 40 by -	40	-	-

TABLE 3. - Floating treatment plants; general data and gold-washing and gold-saving equipment - Continued.

	Trommel									
				Screen						
	Length, feet	Diameter, inches	Scrubber length, feet	Number of sections	Length of section, feet	Diameter of holes, inches	Bridge, inches	Blank section at lower end, feet	Slope, inches per foot	R.p.m.
Lynx Creek	24	60	5	3	6	all 7/16	7/16	1	1-1/2	11
Fay	28	54	8	3	5	all 3/8	1-1/2, 1-1/2, 3/4	5	1-1/4	18 to 19
Jasper-Stacey	32	60	10	3	6	all 3/8	1-1/2, 3/4, 1/2	4	1-1/2	14
Clark	24	54	4	3	5	3/8,3/8,1/2	1, 1, -	5	-	-
Consuelo	20-1/2	54	4	3	5	1/4,3/8,1/2	- - -	1-1/2	1-1/2	-
Cotes	25-1/2	48	4	4	4	all 3/8	- - -	5-1/2	1-1/2	-
Richter	25	48	4	4	4	1/4, 1/4, 1/2, 1/2	- - -	4	1-1/4	15
Cinco Mineros	32	54	10	4	4	3/8, 3/8, 3/8, 1/2	All 3/4	6	-	-
Penn	27	54	5	3	5	3/8,3/8,1/2	-	6	-	-
England	25	48	4	4	4	all 3/8	All 3/4	5	1-1/2	14
Midland	24	48	4	6	4	all 3/8	1-1/4,1-1/4,7/8, 7/8,7/8,7/8	3	-	-
Gold Acres	30	54	-	4	-	all 3/8	1-3/4,1-3/4,1, 1	-	-	18
Pioneer 1	26	48	-	4	4	all 3/8	-	-	1-1/2	15
Pioneer 2	26	48	-	4	4	all 3/8	-	-	1-1/2	15
Pioneer 3	30	60	-	-	-	all 3/8	3/4 to 5/8	-	1-1/2	15
Carlson-Sandburg	30-1/2	54	10	4	4	all 3/8	1-1/2, 7/8, 1/2, 1/2	4-1/2	1-1/2	13
Olson	25	54	4	4	4	3/8, 3/8, 1/2, 1/2	All 3/4	5	1-1/2	14 to 15
Collins	30	60	12	3	4	3/8, 1/2, 1-1/4	-, 1-1/2, 1	5	1-1/4	9
Folsom	18	60	8	1	6	1/2	-	4	1-3/4	16
Lilly	34	54	8	5	4	3/8,3/8,3/8, 3/8,1/2	1-1/2,3/4,1/2,1/2, 1/2	6	1-1/2	-
Schwegler	30	54	8	6	3	all 3/8	-	4	1-1/2	14
Cooley	26	60	5	4	4	all 3/8		5	1-1/2	-
Fairplay	28-1/2	54	6	4	4	1/2,1/2,3/4, slot 1-1/8 by 3/4	1/2,1/2,3/4, -	1/	1-1/2	12 to 15
Prickly Pear	27-1/2	54	-	4	-	slot 7/16 by 9/16	1-1/4	-	1-1/4	17

1/ Last 6-1/2 feet contain half 8- by 8-inch holes and half 10- by 10-inch holes; undersize discharges to stacker; oversize passes to pond by rock chute.

TABLE 3. - Floating treatment plants; general data and gold-washing and gold-saving equipment - Continued.

	Sluices			Riffles		
	Transverse, square feet	Longitudinal, square feet	Grade, inches per foot	Type	Size, inches	Spacing, inches
Lynx Creek	1/	1,000	1-1/2	Wooden, iron-clad, angle iron.	1-1/4 by 1-1/4 7/8 by 7/8	1 2
Fay	1/	750	1-1/4 to 1-1/2	Wooden, iron-clad, angle iron, expanded metal on carpet.	1-1/4 by 1-1/4	1
Jasper-Stacey	165	675	-	Wooden, iron-clad.	1-1/4 by 1	1
Clark	300	320	-	Wooden, iron-clad, expanded metal on matting.	1-1/4 by 1-1/4	1
Consuelo	230	280	1-1/2	Wooden, iron-clad.	1-1/4 by 1	1 to 1-1/4
Cotes	390	420	-	do.	1-1/4 by 1	1
Richter	320	300	1-1/2	do.	1-1/4 by 1	1
Cinco Mineros	480	300	-	Wooden, iron-clad, expanded metal on carpet.	1-1/4 by 1	1
Penn	350	320	-	Wooden, iron-clad, expanded metal on matting.	1-1/4 by 1	1
England	1/	537	1-1/2	Wooden, iron-clad.	1-1/4 by 1	1
Midland	324	180	1-1/4	Wooden, iron-clad, expanded metal on burlap.	1-1/4 by 7/8	1
Gold Acres	200	210	1-1/2	Wooden, iron-clad.	1-1/4 by 1	1
Pioneer 1	270	210	-	do.	1-1/4 by 1	1
Pioneer 2	270	210	-	do.	1-1/4 by 1	1
Pioneer 3	504	320	1-1/2	Wooden, iron-clad, wire screen on matting.	1-1/4 by 1	1
Carlson-Sandburg	328	224	1-1/2	Wooden, iron-clad.	1-1/8 by 1	1
Olson	352	288	1-1/2	do.	1-1/2 by 1	1-1/4
Collins	460	250	-	Wooden, iron-clad, wire screen on matting.	1-1/2 by 5/8	1-1/4
Folsom	0	120	1-1/4	Wooden, iron-clad, screen on matting.	-	-
Lilly	545	180	1-1/2	Wooden, iron-clad	1-1/4 by 1-1/4	1
Schwegler	432	420	1-1/2	Angle iron.	1-1/4 by 1-1/4	1
Cooley	1/	1,000	1-1/4	do.	1 by 1	1
Fairplay	276	208	3/4	Screen over matting and "T" iron.	-	-
Prickly Pear	330	130	1+	Angle iron.	1-1/2 by 1-1/4	1-1/4

1/ Included in longitudinal.

TABLE 3. - Floating treatment plants; general data and gold-washing and gold-saving equipment - Continued

	Length of stacker, feet	Width of stacker belt, inches	Size of pump discharge, inches	Horse-power of plant	Type of engine	Clean-up period		Quick-silver charged, pounds
						Cross sluices, days	Entire plant, days	
Lynx Creek	2/ 80	26	8 6	135	Electric.	4	12	700
Fay	45	24	8	64	Diesel.	3	6	152
Jasper-Stacey	60	34	8	142	Electric.	-	-	57
Clark	40	24	7	50	Diesel.	-	-	-
Consuelo	20	17	8	90	Diesel.	7	21	-
Cotes	40	28	8	50	do.	-	-	-
Richter	50	22	8	60	do.	7	14	152
Cinco Mineros	50	30	7, 4	85	do.	10	20	114
Penn	60	24	7, 5	65	do.	6	18	150
England	45	24	7	50	do.	-	-	-
Midland	45	24	10	80	do.	5	14	60
Gold Acres	50	30	6	88	do.	2	6	100
Pioneer 1	40	30	-	50	do.	-	-	-
Pioneer 2	40	24	-	50	do.	-	-	-
Pioneer 3	50	36	10	223	Electric.	-	-	-
Carlson-Sandburg	50	30	8	57-1/2	do.	3-1/3	7	266
Olson	45	30	8	50	Diesel.	3/	3/	-
Collins	36	36	8	100	do.	4	4	60
Folsom	40	18	-	51-1/2	Electric.	0	10	50
Lilly	50	30	8	102-1/2	do.	-	14	150
Schwegler	50	24	12	185	do.	-	15	-
Cooley	60	36	8	95	Diesel.	3	14	0
Fairplay	70	24	8, 4	144	Gasoline.	-	-	0
Prickly Pear	32	30	8, 8	150	do.	-	7	61

2/ Also a rock conveyor, 65 feet by 36 inches.

3/ Half of cross sluices cleaned every 150 hours. Last half cleaned every 300 hours, and the side sluices are cleaned every 450 hours.

TABLE 4. - Operating data at placer mines using floating treatment plants.

	Shifts		Operating time, hours per day	Gravel washed per hour of operating time, cubic yards	Labor					
					Excavation					
					Operators		Oilers		Bulldozer operators	
	Number per 24 hours	Hours per shift			Number	Rate per hour	Number	Rate per hour	Number	Rate per hour
Lynx Creek	3	8	18	125	6	$1.00 1.25	6	$0.60	0	-
Fay	2	8	15-1/4	90	2	1.00	0	-	2	$ .625
Jasper-Stacey	3	8	21	67	-	-	-	-	-	-
Clark	3	8	20	90	3	-	3	-	0	-
Consuelo	3	8	20-1/2	50	3	1.00	3	.5625	0	-
Richter	3	8	19	79	3	.875	3	.50	0	-
Cinco Mineros	3	8	19-1/2	82	3	1.00	3	.5625	1	.5625
Penn	3	8	-	104	3	1.00	3	.625	0	-
England	3	8	15-7/10	127	3	-	3	-	0	-
Midland	2	9	15-1/3	122	2	1.00	0	-	0	-
Gold Acres	3	8	21	100	3	0	3	-	1	-
Pioneer 1	3	8	19	100	3	1.00	3	.625	1	.625
Pioneer 2	3	8	19	100	3	1.00	3	.625	1	.625
Pioneer 3	3	8	16-1/2	180	3	1.00	3	.625	1	.625
Carlson-Sandburg	3	8	19	130	3	1.00	3	.625	1	.625
Olson	3	8	18	167	3	1.00	3	.625	1	.875
Collins	2	10	19	100	2	1.25	1/4	.65	1	1.00
Folsom	2	8	15	90	2	.85	0	-	0	-
Lilly	3	8	21-1/2	125	3	1.00	3	.625	1	.625
Schwegler	3	8	19	100	3	-	3	-	0	-
Cooley	2/3	8	20	60	3	-	3	-	0	-
Fairplay	2	10	12	50	2	-	0	0	0	-
Prickly Pear	3	8	20	100	3	1.50	3	.50	0	-

1/ Includes two oilers for washing plant.
2/ Strip one shift every 4 days.

TABLE 4. - Operating data at placer mines using floating treatment plants. - Continued.

	Labor									
	Washing and gold saving		Miscellaneous							
	Operators		Welders		Foremen		Roustabout		Extras, number	Total number of employees
	Number	Rate per hour	Number	Rate per hour	Number	Rate per hour	Number	Rate per hour		
Lynx Creek	9	$0.60	2	$0.60	1	-	3	$0.60	3	30
Fay	2	.625	0	-	1	-	0	-	0	7
Jasper-Stacey	-	-	-	-	-	-	-	-	-	-
Clark	3	-	1	-	1	-	1	-	0	12
Consuelo	3	.625	1	.625	1	.75	0	-	0	11
Richter	3	.625	1	.75	0	-	1	.50	1	12
Cinco Mineros	3	.5625	1	-	1	1.25	1	.5625	0	13
Penn	3	.625	1	.875	0	-	3	.625	1	14
England	3	-	1	-	1	-	1	-	0	12
Midland	2	.70	1	.70	0	-	5	.60	1	11
Gold Acres	3	-	1	-	0	-	1	-	1	13
Pioneer 1	6	.625					1	.625		
Pioneer 2	6	.625	2	.625	1	-	1	.625	2	47
Pioneer 3	6	.625					1	.625		
Carlson-Sandburg	3	.625	2	.625	0	-	2	.625	1	15
Olson	3	.625	1	.75	0	-	1	.625	1	13
Collins	2	.85	1	-	1	-	4	.50	1	16
Folsom	4	.50	0	-	1	-	0	-	0	7
Lilly	3	.625	1	.625	1	-	0	-	0	12
Schwegler	3	-	1	-	1	-	1	-	0	12
Cooley	3	-	1	-	1	-	0	-	1	12
Fairplay	4	-	0	-	1	-	0	-	0	7
Prickly Pear	6	-	1	-	3	-	0	-	1	17

TABLE 4. - Operating data at placer mines using floating treatment plants - Continued.

	Fuel consumed					Water for pond and washing				Recovery 3/		
	Excavator		Washing and gold saving			Washing						
	Per hour, gallons	Per cubic yard, gallons	Per hour, gallons	Per cubic yard, gallons	Cost per gallon of fuel	g.p.m.	Gallons per cubic yard	Miner's inches bought or used	Cost per miner's inch	Loss in digging percent	Loss in washing, percent	Total recovery, percent
Lynx Creek	-	-	-	-	-	2,500	-	-	-	Small	15 - 25	80
Fay	5.90	.07	5.90	.07	$0.055	-	-	35	$0.10	-	10 - 15	-
Jasper-Stacey	0	0	0	0	0	3,000	2,500	40	.10	-	-	95
Consuelo	2.68	.05	5.86	.12	.06	-	-	40	-	25	-	75
Richter	4.74	.06	3.16	.04	.06	-	-	-	-	-	-	100
Cinco Mineros	4.61	.06	3.59	.04	.06	-	-	50	.125	Small	Small	100
Penn	4.38	.04	2.91	.03	.06	-	-	-	-	20	do.	80
England	-	-	-	-	-	1,200	570	-	-	-	-	100
Midland	-	-	-	-	-	2,800	1,400	-	0	-	-	100
Gold Acres	3.00	.03	3.00	.03	-	-	-	-	-	12.5	12.5	75
Pioneer 1												
Pioneer 2	17.5	.09	4/	4/	.065	-	-	-	-	Small	13	87
Pioneer 3	0	0	0	0	0	-	-	-	-			
Carlson-Sandburg	4.73	.04	0	0	.06	1,800	830	100	-	10	Small	90
Olson	7.78	.05	4/	4/	-	2,000	720	40	.10	-	-	-
Collins	3.00	.03	10.00	.10	.065	1,800	1,080	100	-	-	-	95
Folsom	6.67	.07	0	0	.15	1,200	800	20	-	-	-	-
Lilly	5/ 9.30	5/ .07	0	0	.06	-	-	-	-	-	-	-
Schwegler	0	0	0	0	0	2,500	1,500	50	.12	-	-	105
Cooley	2.5	.04	3.75	.06	.09	-	-	55	-	-	-	-
Fairplay	5.50	.11	20.0	.4	.20	-	-	-	-	-	-	-
Prickly Pear	5.50	.06	0	0	.11	3,000	1,800	150	-	-	-	-

3/ Based on method of testing ground.
4/ Included with excavator.
5/ Includes small amount for bulldozer.

Hulls are constructed of wood or steel; the smallest one visited was 17 by 35 feet and 3-1/2 feet in depth; the largest was 50 by 50-1/2 feet and 2-1/4 feet in depth; the customary size is 30 by 40 by 3-1/2 feet for boats with a capacity of 100 to 130 cubic yards per hour. The size is very important; in addition to being able to carry the load, the hull should be large enough to give as much stability to the plant as practicable in order to minimize swaying and tipping caused by the intermittent dumping of gravel into the hopper. Swaying interferes with the efficiency of the sluices, and sudden tipping causes sand to bank in places and upset the even flow over the riffles. The latest practice is to use steel pontoons about 8 by 30 by 3 feet in size, fastened together by bolting them to steel members laid across the deck. The first cost of the steel pontoon hull is greater than that of wood; the steel hull, however, has a much longer life. When the plant is dismantled and moved to a new site, the pontoon sections are separated and moved along with it. An ultimate saving of steel over wood hulls is claimed by manufacturers. Hulls made of wood are constructed on the site and abandoned when the operation is finished.

The superstructure is made of wood or steel. The engine and winch room on the upper deck usually is covered with corrugated iron. Occasionally the entire plant is enclosed, particularly in colder climates.

A hopper, usually about 15 to 15-1/2 feet above the surface of the pond, is constructed at the front of the boat. This is made of metal supported by steel or wood underpinning; it slopes downward, terminating in a metal chute that conveys the gravel to the feed end of the trommel. Manufacturers recommend that the hopper be lined with 2 to 4 inches of wooden plank, over which is laid a wearing sheet of steel plate shaped to the hopper. The wearing sheet may be renewed economically without renewing the entire hopper; the wood serves as a cushion.

A grizzly, usually level, with from 8-to 18-inch spacing between the bars is mounted above the hopper. The usual spacing is 12 inches. Railroad rails up to 90 pounds per yard are used for bars. They are inverted to prevent blinding of the grizzly. Oversize boulders and trash usually are thrown by hand into the pond.

The trommels in use on the boats listed are 48, 54, and 60 inches in diameter and from 18 to 32 feet in length. About 4 feet on each end is blank to protect the trunion rollers and drive mechanism. An additional 4 to 8 feet is blank on the feed end of the trommel; on about half the boats visited, to provide a scrubber for the gravel. The blank upper ends in the more modern trommels are provided with a lining of high carbon or other abrasive resisting steel to protect the shell. Considerable saving is made by this procedure, as the lining may be burned out and replaced more cheaply than the outer shell.

Most of the screens of the trommels are 16 to 20 feet long, made up of 4- or 5-foot sections. Usually, each section is made up of four rolled-steel plates forming the periphery of the shell. The blank sections are tied

together endwise across the screen area with four heavy railroad rails, the base flanges of which act as the longitudinal butt straps and to which the replaceable screen section plates are bolted. Peripheral butt straps about 4 inches wide and 1/2 inch thick cover the joints between abutting sections of screens to which they are bolted.

Some operators prefer welded joints; these are cheaper to construct but are more costly to maintain. The worm section must be burned out and new parts welded in.

Screens usually are perforated with holes with a minimum diameter of 3/8 inch along most of their length. Depending on the maximum size of gold nuggets found during testing, the last section of screen may be perforated with holes 1/2, 5/8, or 3/4 inch in diameter. When flat or elongated nuggets are found, one or more of the last sections sometimes are perforated with slots. These are formed by punching or drilling two holes, 3/8 inch in diameter or larger, near each other and cutting out the intervening metal.

The bridge between holes in the screen commonly is diminished gradually for each succeeding section, to give an equal distribution of the undersize to the sluices. A less common method is to start with smaller holes in the first section and increase the size in succeeding sections, keeping the bridging the same.

The intermittent loads dumped into the hopper cause surges of gravel through the screen and sluices. To equalize the flow, some trommels have been equipped with an Archimedean or spiral type of retarding ring that acts as a feeder. The spiral ring makes one or more turns along the length of the blank scrubber section. Considerable success is claimed by the operators in regulating the flow by this method.

The degree of cementation found in various gravel deposits varies over a wide range. Some are entirely unconsolidated, and a strong stream of water introduced by a spray pipe within the trommel is sufficient entirely to disintegrate the masses and free the gold. Other gravels may be cemented or may contain layers of clay; when this condition exists, it is often found necessary to increase the scrubbing section up to half the length of the trommel. Lifter bars, comprising short pieces of angle iron, usually are bolted to the inside of the trommel to increase cascading and to aid in the disintegration of the gravel. Retarding rings are also commonly used in addition to lifter bars to give the water more time to act on clayey masses. The capacity of a screen decreases as the time required to disintegrate the gravel increases.

Best practice indicates that all clay should be entirely broken down into a pulp, regardless of whether it contains gold. Obviously, if gold is entrapped in clay balls, it will be lost with the rock oversize. Clay passing through the screen has been noted to have collected flecks of gold and carried them off with the tailings.

The slope of the trommels usually is 1-1/2 inches to a foot. Speed of rotation ranges from 14 to 19 r.p.m., with 15 r.p.m. the most common.

Sluice boxes with riffles (called riffle tables on dredges) are used on all the boats for recovering the gold; at one plant, however, (Jasper-Stacey) jigs are employed in the flow sheet in addition to riffle tables. Sluice boxes usually are made of about No. 12-gage steel; those in use generally range from 24 to 48 inches in width and 6 to 9 inches in depth. A typical arrangement is shown in figure 4. The slope is between 1-1/4 to 1-1/2 inches per foot; the latter grade is favored. The width, area, and slope of the sluices have an important bearing on the gold-saving efficiency of the plant. An even distribution of sand across the width of the sluice is necessary for good work. The side sway of the boat has a tendency to pile the sand up at the edges; this tendency increases with the width. The 48-inch width is undoubtedly too great; 30 inches is probably a better maximum.

The character of the deposit and its contained gold determines the table area required per cubic yard of material handled hourly. In average ground in which about 50 percent of the material passes through the screen, manufacturers recommend at least 500 and preferably 600 square feet for plants with a capacity of 150 cubic yards per hour. The table areas of all the plants visited are well in excess of this requirement.

The slope of the tables should be adjusted to the character of the material handled. The slope is increased when fines tend to pack in the riffles or when the gravels contain an undue proportion of sand.

Wooden riffles are used in the sluices on most of the boats; these consist of 1- by 1-inch slats topped with 1/8- or 1/4-inch by 1-1/8- or 1-1/4-inch strap iron. The overhang of the strap iron is on the downstream side. The top of the wooden member of the riffle is usually cut on a bias to make the strap iron lie flat; this has a tendency to cause cascading as the pulp passes down the sluice. Usually, the riffles are made up in sections of 10 each; they are held together by header slats at each end. Generally the width of the riffle is 1/8 inch less than the width of the box, to facilitate its removal. Riffles made of 1-1/4- by 1-1/4-inch angle are favored by many. The top of the riffle may be placed parallel to the bottom of the box, but usually it is horizontal. The overhang is downstream. The iron riffles are made up into sections by being welded onto strap headers on each end or by being fitted into notches in wooden strips. Riffles are spaced 1 to 1-1/2 inches apart. One or the other of these types of riffles is used in all the plants. They are supplemented by expanded metal or wire screen laid on burlap, carpet, or matting. Usually, these auxiliary riffles follow the main type for the purpose of catching fine and rusty gold not caught by the standard riffles.

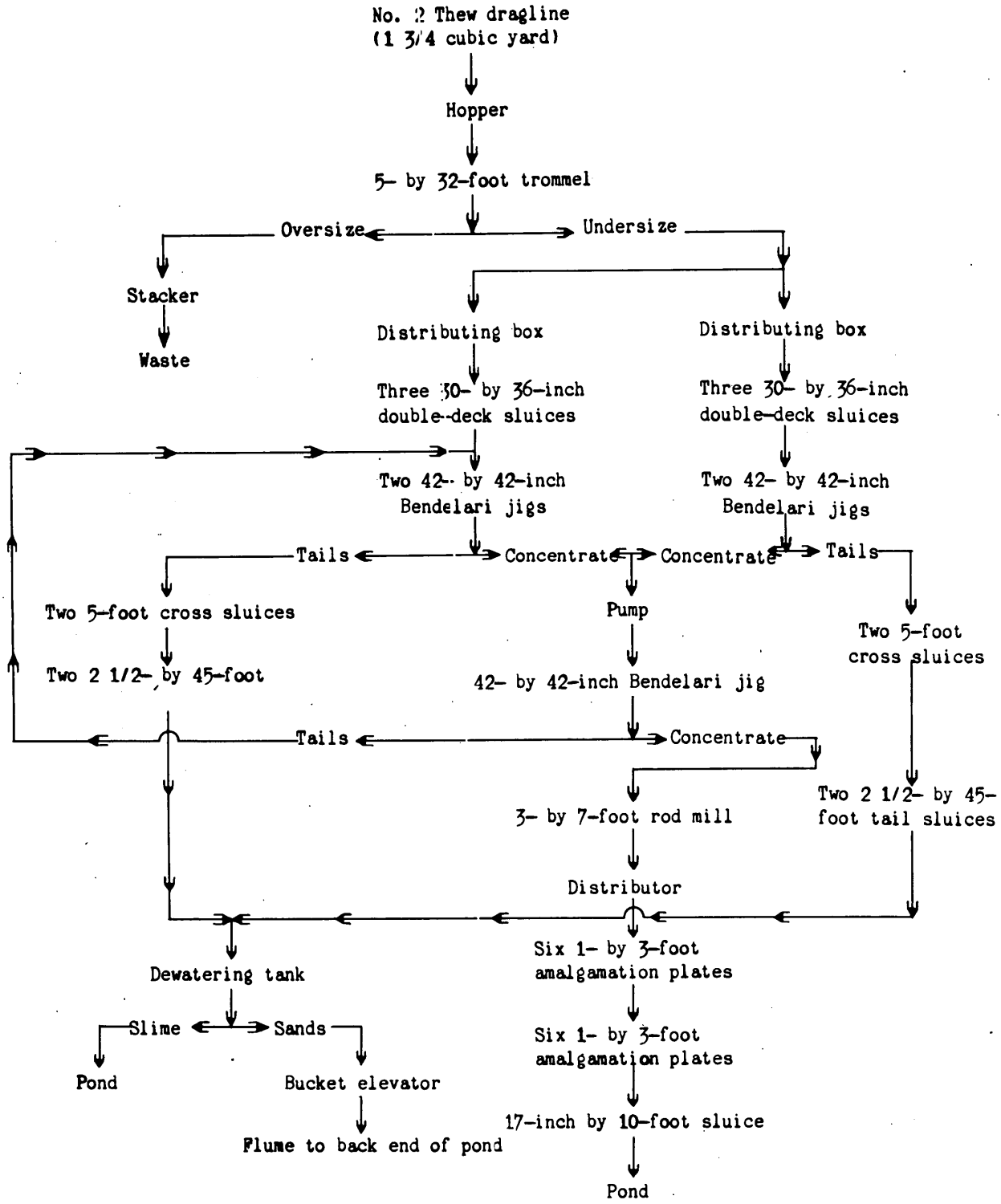

Figure 5.- Flow sheet, Jasper and Stacey boat.

Special riffles or traps are installed at the heads of the cross sluices on the boats into which the quicksilver is charged. A common type comprises a number of 1- by 1-inch cross slats nailed together. Alternate slats have a series of 1/2- by 2-inch notches; the slat sections are placed with their length across the sluice. Other types comprise boards with holes partly bored through them and moulded rubber mats with round or irregular depressions. The better constructed side sluices usually have a strap iron 1 to 1-1/4 inches high, welded on edge at the lower ends; this prevents live quicksilver from penetrating beyond this point. Traps consisting of rectangular depressions in the bottoms are used at the lower ends of the side sluices; occasionally extra traps are installed farther up in the boxes.

Jasper and Stacey

The operators of the Jasper and Stacey mine at Lincoln, Calif., have done considerable pioneering in metallurgy as applicable to the type of treatment plants under discussion. Standard practice is followed in digging and washing; an innovation has been applied in saving the gold. Figure 5 is the flow sheet of the plant.

The gravel is washed in a 60-inch by 32-foot trommel, comprising a 10-foot scrubber section, three 6-foot screen sections, and a 4-foot blank discharge section. Perforations are all 3/8-inch diameter; the bridging is 1-1/2, 3/4, and 1/2 inches, respectively, for each screen section.

The undersize from the trommel distributing boxes goes to a bank of three 30-inch-wide by 3-foot-long double-deck riffle tables on each side, and thence to two 42- by 42-inch Bendelari jigs on a side. The jigs have 5-foot head room, a 1-3/8-inch stroke, and pulsate at the rate of 124 per minute. A bed of 250 pounds of No. 10 shot is used in each jig. The overflow from each pair of jigs passes over two 5-foot sluices and thence through 30-inch by 45-foot longitudinal sluices to a dewatering tank. The sand is raised by a bucket elevator to a steel sluice, from which it is discharged onto the rock pile at the edge of the pond.

The hutch product from the primary jigs is pumped to a cleaner jig. The bed of the cleaner consists of 350 pounds of No. 13 and 250 pounds of No. 10 shot. The pulsations are 136 per minute.

The overflow from the cleaner jig flows by gravity back to one of the rougher jigs. The hutch product flows by gravity to a 36-inch by 7-foot rod mill divided midway by a partition. Six 3-inch rods are used on one side and five 4-inch rods on the other. The mill turns at 19 r.p.m.

The pulp from the mill is distributed over two sets of 12- by 36-inch amalgam plates in series. The pulp from the plates goes through a 17-inch by 10-foot sluice, with 3 feet of quicksilver traps and 7 feet of wooden Hungarian riffles, and thence to one of the tail sluices.

The operators state that most of the gold is recovered in the double-deck cross riffles and distributors under the trommel. About 25 percent of the recovered gold is saved in the jigs. Recovery is said to have been raised about 25 percent by use of the jigs.

MOVABLE LAND PLANTS

The placer mines visited, at which movable land plants are used, are scattered widely over six Western States. Two of the plants are in California, 5 in Colorado, 1 in Idaho, 3 in Montana, 1 in New Mexico, and 2 in Wyoming.

Tables 5 to 8 give information on the gravels, excavators, and treatment plants, and operating data on placer mines where the gravel is excavated by draglines or power shovels and the gold is recovered in movable and stationary plants.

Figure 6a shows the essential details of a small movable plant, comprising a trommel and riffle sluice; figure 6b shows one comprising a trommel and Ainlay centrifugal bowls.

At three properties, the gravels were washed and screened in plants in the pits and the screen undersize is pumped to separate gold-saving units back on the tailings piles.

All the plants, except the Jett-Ross, wash and screen the gravel in trommels; all use sluices or Ainlay bowls for recovering the gold. A few plants employing Ainlay bowls are built along the same general lines, but the construction of the majority of the plants differs greatly at individual mines. Few mines use the same lay-out, even under similar conditions. The lack of standardization of practices at the mines using both movable and stationary plants probably is partly due to the isolation of the plants making it difficult for the operators to exchange information. Moreover, enough plants have not been constructed by any one manufacturer to eliminate all the mechanical difficulties. The principal drawback to this type of plant has been time lost because of breakdowns. The most fruitful cause of lost time has been failure of power units. Many of the plants have been designed by men without previous experience in this line of work; most of them, in part at least, are built of salvaged material. Long periods of adjustment generally are necessary to get reasonably continuous operation. Next to engines, mountings and drives of trommels appear to give the most mechanical trouble.

Frames of movable plants usually are built of structural steel. The plants may be mounted on tractor chassis, railroad-car trucks or locally made trucks; caterpillar treads running on the ground or timber mats, and wheels running on rails or timber generally are used. Some plants are moved on skids. The plants may be self-propelled, usually by tractor units, on which they are mounted, or they may be towed by the excavating unit.

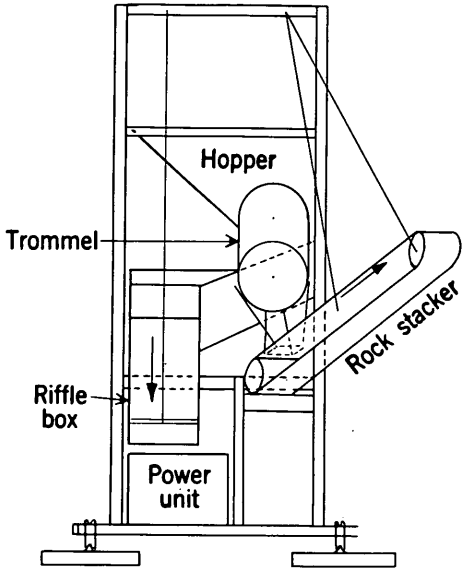

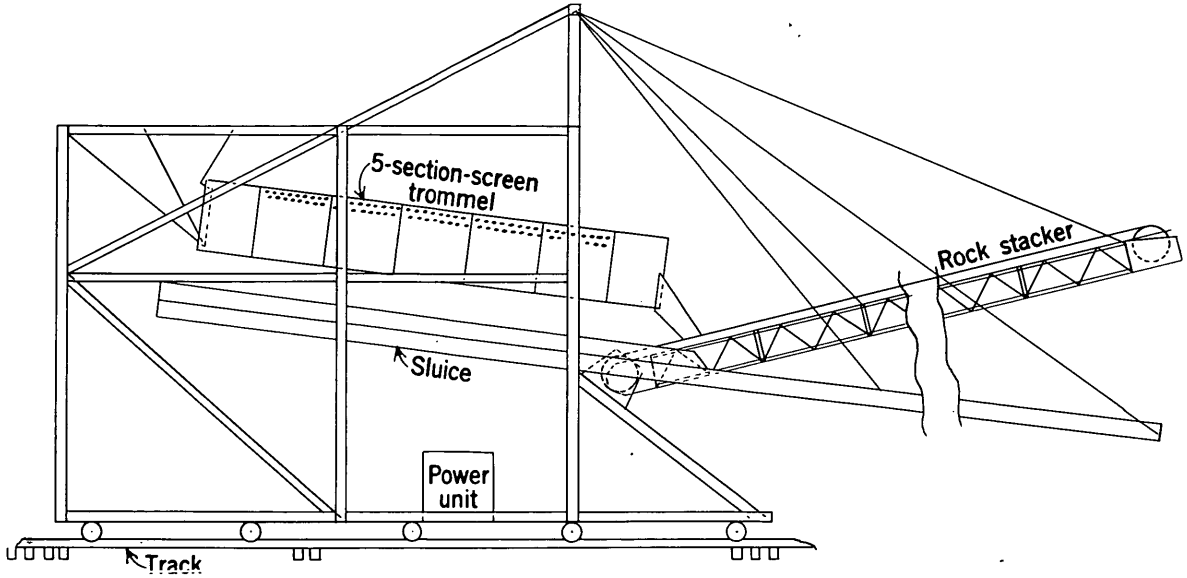

A-TROMMEL AND RIFFLE SLUICE

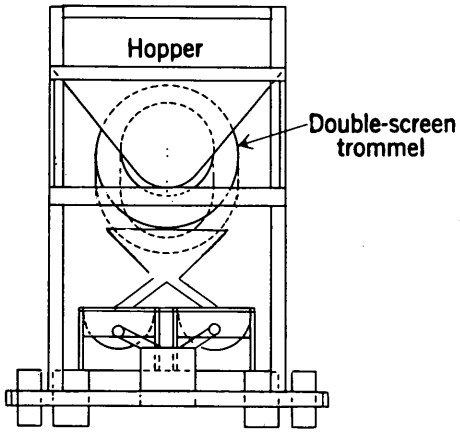

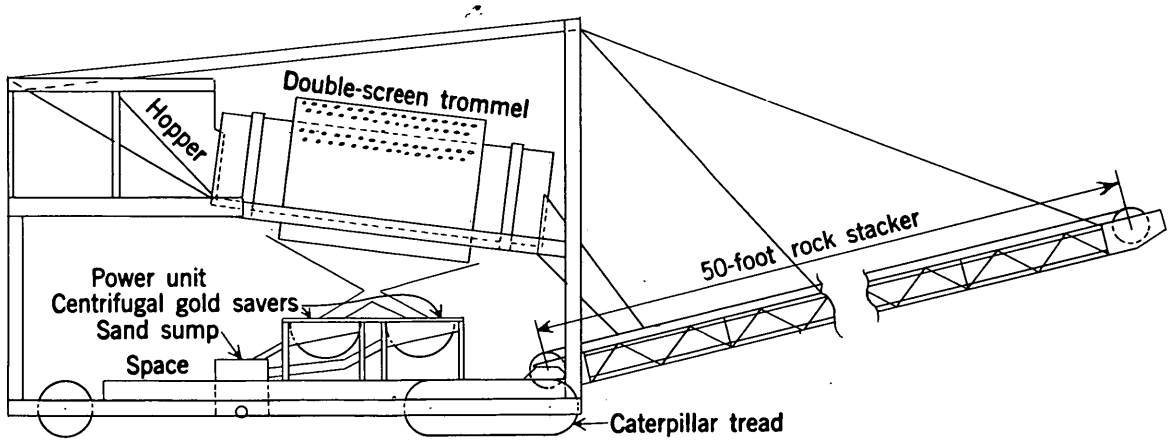

B-TROMMEL AND CENTRIFUGAL BOWLS

Figure 6.—Essential features of movable washing and gold-saving land plants (not drawn to scale).

TABLE 5. - General data on placer operations using movable and stationary land plants.

Name	Situation	Operator	Date
Movable land plants:			
Skeels	Rocklin, Calif.	E. B. Skeels.	1937
Pantle	Lincoln, Calif.	Pantle Bros.	do.
Pan-Due	Leadville, Colo.	Pan-Due Placer Co.	1936
Peerless	Como, Colo.	Peerless Mining Co.	do.
Fairplay	Fairplay, Colo.	H. H. Reiber.	do.
Blackhawk	Blackhawk, Colo.	Edward Manion.	1937
Humphreys	Clear Creek, Colo.	Humphreys Gold Corporation.	1936
Dixie	Dixie, Idaho	Dixie Placers.	1937
Humphreys[1]	Virginia City, Mont.	Humphreys Gold Corporation.	1936
Eldorado	Finn, Mont.	Eldorado Gold Placer Mining Co.	do.
Pikes Peak	Finn, Mont.	Pikes Peak Mining Co.	do.
Hallett[3]	Hillsboro, N. Mex.	John V. Hallet.	do.
Jett-Ross	Atlantic City, Wyo.	Jett-Ross Mines Inc.	do.
Fisher	do.	E. T. Fisher Co.	do.
Stationary plants:			
Ash Canyon	Cochise County, Ariz.	R. R. Meier.	1937
Chittendon	Lincoln, Calif.	Charles N. Chittendon.	do.
Von der Hellen	Siskiyou County, Calif.	Wm. Von der Hellen, grading contractor.	do.
Guerin	do.	Guerin Bros.	do.
Wallace[5]	Wallace, Calif.	Gold Gravel Products Co.	1936
La Grange	La Grange, Calif.	La Grange Placer Mines.	1937
Rhyolite	Oreana, Nev.	C. E. Swartz and three partners.	do.

(See following page for footnotes.)

TABLE 5. - General data on placer operations using movable and stationary land plants - Continued

Name	Gravel					Bedrock		
	Depth of stripping, feet	Average depth, feet	Physical character	Boulders over 1 foot	Clay, percent	Kind	Depth mined, inches	Character
Movable land plants:								
Skeels	0	8 to 12	Easy digging.	0	-	Granite	8	-
Pantle	10 to 12	18 to 20	do.	0	0	do.	24	-
Pan-Due	0	20	do.	0	-	do.	24	-
Peerless	3 to 12	9	do.	0	-	do.	4	-
Fairplay	3	-	do.	Few.	-	-	-	-
Blackhawk	0	26	do.	-	-	Decomposed granite schist	12 to 15	-
Humphreys	-	15	do.	Numerous.	Small	Granite, schist	Over 1	-
Dixie	10	13	do.	do.	-	Decomposed granite schist	6 to 12	Rough
Humphreys 1/	0	17	do.	0	-	Volcanic ash	6	-
Eldorado	12 to 13	15	do.	0	Considerable	Shale, clay	-	-
Pikes Peak	9	12	do.	0	Small	Clay	2/	-
Hallett 3/	2 to 6	10	-	-	do.	-	-	-
Jett-Ross	2 to 12	2 to 8	Loose to tight.	2%	0	Schist, diorite	24 to 60	Rough
Fisher	3	10	Easy digging.	Few.	-	Diorite, schist	18 to 24	-
Stationary plants:								
Ash Canyon	8	10	Hard digging.	do.	Small	Cemented conglomerate	2 to 3	-
Chittendon	0	15	do.	0	do.	Granite	6 to 10	Uneven.
Von der Hellen	Up to 12	40	do.	5%	0	Serpentine	18 to 24	do.
Guerin	0	27	do.	10%	0	4/	4/	4/
Wallace 5/	-	-	-	-	-	-	-	-
La Grange	0	25	Hard digging.	Few.	0	Volcanic tuff	Few	Hard
Rhyolite	10	4	Easy digging.	-	-	Gravel	-	Soft

1/ Corry, Arthur V., Dragline Installation For Recovering Gold at Virginia City, Mont.: Mining and Metallurgy, Oct. 1936. 2/ Enriched clay is stripped by hand. 3/ Metzger, O. H., Gold Mining in New Mexico: Inf. Circ. 6987, Bureau of Mines, 1938. 4/ The operations had not reached bedrock. 5/ The original operations of Gold Gravel Products Co. were described by Gardner and Johnson in Placer Mining in the Western United States, Part III: Inf. Circ. 6788, February 1935, p. 31.

TABLE 6. - Excavating and transportation equipment at placer operations using movable and stationary land plants.

	Excavator				
	Type	Capacity of bucket, cubic yards	Length of boom, feet	Horse-power of engine	Kind of power or fuel
Movable land plants:					
Skeels	Shovel	1-1/4	-	-	Gasoline
Pantle	Dragline	1	50	85	Diesel
Pan-Due	Shovel	1-1/4	22	100	Gasoline
Peerless	do.	1-1/4	30	90	do.
Fairplay	Dragline	1-1/4	50	-	Diesel
Blackhawk	Shovel	1-1/4	23	150	Gasoline
Humphreys, Clear Creek	Dragline	2-1/2	50	150	do.
	do.	2-1/2	50	150	do.
	Shovel	1-1/4	22	130	Diesel
Dixie	Dragline	3/4	45	-	Gasoline
Humphreys, Virginia City	Dragline	2-1/2	50	100	Electric
	do.	2-1/2	50	100	do.
	Shovel	1-3/4	-	75	do.
Eldorado	Dragline	1-1/8	-	60	-
Pikes Peak	do.	1-1/4	50	-	Gasoline
Hallett	do.	1/ 1-1/4, 1	-	-	Fuel oil
Jett-Ross	do.	1-1/4	50	125	Burning oil
Fisher	do.	1-1/4	60	-	Fuel oil
Stationary plants:					
Ash Canyon	Shovel	1/2	-	65	Gasoline
Chittendon	do.	1/2	35	-	do.
Von der Hellen	do.	1-1/4	21	-	do.
Guerin	do.	3/8	-	-	do.
Wallace	do.	1-1/4	30	92	do.
La Grange	do.	3/4	-	-	do.
Rhyolite	do.	5/8	-	-	do.

1/ The 1-1/4-cubic-yard dragline is used for stripping and moving reject from washer.

TABLE 6. - Excavating and transportation equipment at placer operations using movable and stationary land plants - Continued.

	Cables						Transportation			
	Hoist			Drag						
	Diameter, inches	Length, feet	Length of service, hours	Diameter, inches	Length, feet	Length of service, hours	Type	Capacity, cubic yards	Kind of power or fuel	Length of haul, feet
Movable land plants:										
Skeels	-	-	-	0	0	0				
Pantle	3/8	180	600	7/8	70	300				
Pan-Due	3/4	-	900	0	0	0				
Peerless	-	-	-	0	0	0				
Fairplay	-	-	-	-	-	-				
Blackhawk	7/8	-	700	0	0	0				
Humphreys, Clear Creek	1	130	800	1-1/8	65	150				
	1	130	800	1-1/8	65	150				
	7/8	-	-	0	0	0				
Dixie	-	-	-	-	-	-				
Humphreys, Virginia City	-	-	-	-	-	-				
	-	-	-	-	-	-				
	-	-	-	0	0	0				
Eldorado	-	-	-	-	-	-				
Pikes Peak	-	-	-	-	-	-				
Hallett	-	-	-	-	-	-				
Jett-Ross	3/4	110	500	7/8	66	100				
Fisher	7/8	134	700	7/8	70	350				
Stationary plants:										
Ash Canyon	-	-	-	0	0	0	Truck	1-1/2	Gasoline	1,500
Chittendon	1/2	70	600	0	0	0	Trucks 2/	3	do.	400
Von der Hellen	7/8	-	300	0	0	0	do. 3/	2-1/2, 5	do.	900
Guerin	1/2	68	400	0	0	0	Derrick	3/4	do.	4/ 35
Wallace	-	-	-	0	0	0	Train	5/	6/	2,600
La Grange	9/16	96	400	0	0	0	Trucks	3	Gasoline	600
Rhyolite	-	-	-	-	-	-	Trucks	2-1/2	do.	5,000

2/ Two 3-cubic-yard trucks. 3/ The company has three 2-1/2-cubic-yard trucks and two 5-cubic-yard trucks; three trucks each shift haul gravel to the washing plant, one truck hauls away the oversize a distance of 150 feet and one truck is on general service. 4/ Vertical lift. 5/ A train was comprised of four 4-cubic-yard and four 6-cubic-yard dump cars. 6/ Two 8-ton and one 5-ton Plymouth gasoline locomotives and two 17-ton steam locomotives.

TABLE 7. - Movable and stationary treatment plants; general data and gold washing and gold saving equipment.

	Type of plant	Type of construction and mountings	Feeder unit
Movable land plants:			
Skeels.....	Trommel, sluice, and centrifugal bowls.	Steel frame on caterpillar treads and wheels.	Hopper and plate feeder.
Pantle.....	Trommel and centrifugal bowls.	do.	3-cubic-yard hopper.
Pan-Due.....	do.	Steel frame on four railroad car trucks.	Hopper.
Peerless.....	do.	Steel frame on four wheels.	Hopper and belt.
Fairplay.....	Trommel and sluice.	Steel frame on wheels.	1-1/4-cubic-yard hopper.
Blackhawk.....	do.	Steel on chassis of old dragline.	Hopper.
Humphreys, Clear Creek.....	do.	Steel frame on caterpillar tractor chassis.	10-cubic-yard hopper and pan-belt, feeder
Dixie.....	do.	Eight double-flanged wheels running on timber track.	Hopper.
Humphreys, Virginia City.....	do.	Steel frame on three tractor chassis and caterpillar treads.	20-cubic-yard hopper and pan feeder.
Eldorado.....	do.	Steel frame on eight wheels.	Hopper.
Pikes Peak.....	do.	Steel frame on two 2-wheel trucks and two caterpillar treads.	do.
Hallett.....	Trommel and centrifugal bowls.	Steel frame, four wheels on wooden stringers.	2-cubic-yard hopper.
Jett-Ross.....	Grizzly and sluices.	Wooden frame on skids.	Hopper.
Fisher.....	Trommel and sluice.	Seven double-flanged wheels on each side running on rails.	4-cubic-yard hopper.

TABLE 7. - Movable and stationary treatment plants; general data and gold washing and gold saving equipment - Continued.

	Trommel									
				Screen						
	Length, feet	Diameter, inches	Scrubber length, feet	Number of sections	Length of section, feet	Size of holes, inches	Bridge, inches	Discharge length, feet	Slope, inches per ft.	r.p.m.
Movable land plants:										
Skeels	16	48	4	1/ 2	8-1/2, 6	(1)	-	3-1/2	-	-
Pantle	14	48	3	2/ 2	8	(2)	-	3	-	-
Pan-Due	24	60	4	3	5-2/3	3/8	-	3	7/8	9
Peerless	12	50	4	1	8	1/4 by 1/8	-	0	-	15
Fairplay	16	42	4	3	4, 4, 3	1/4, 5/8 5/8	-	1	1	12 to 20
Blackhawk	12	62	6	3	-	5/8, 5/8 and 7/8	-	0	2	14
Humphreys, Clear Creek	18	72	-	-	-	1-1/8	-	-	2	11
Dixie	19	48	5	3	4	1/4, 3/8 and 3/8	-	2	1-1/4	20
Humphreys, Virginia City	24	84	4	1	18	1-1/8	-	2	-	18
Eldorado	32	48	6	3/ 3	4, 9, 12	4/	-	1	1	-
Pikes Peak	23	48	6	5/ 3	4, 8-1/2, 1-1/2	6/	-	4	1	14
Hallett	12	7/	0	3	7/	7/	-	-	3/4	-
Jett-Ross	0	0	0	0	0	0	0	0	0	0
Fisher	22	54	5	3	4	1/4, 1/2 and 3/4 by 1-1/2	-	5	-	14

(See footnotes on page 32.)

TABLE 7. - Movable and stationary treatment plants; general data and gold washing and gold saving equipment - Continued.

	Type of plant	Type of construction and mountings	Feeder unit
Stationary plants:			
Ash Canyon.....	Trommel and 1 centrifugal bowl.	Wooden frame.	Grizzly and hopper.
Chittendon.....	Trommel and sluices.	do.	4-cubic-yard hopper; 75-foot belt conveyor.
Von der Hellen....	do.	do.	6-cubic-yard hopper.
Guerin.....	do.	do.	5- by 5-foot hopper.
Wallace.....	do.	-	8-inch grizzly, hopper.
La Grange.....	do.	Steel frame.	8-inch grizzly 20-cubic-yard bin electric plate feeder.
Rhyolite.....	do.	Wooden frame.	-

TABLE 7. - Movable and stationary treatment plants; general data and gold washing and gold saving equipment - Continued

	Trommel									
				Screen						
	Length, feet	Diameter, inches	Scrubber length, feet	Number of sections	Length of section, feet	Size of holes inches	Bridge, inches	Discharge length, feet	Slope inches per ft.	r.p.m.
Stationary plants:										
Ash Canyon.....	8	36	0	1	8	1/2	-	0	-	15
Chittendon.....	12	52	8	8/2	4	8/	2	0	1	14
Von der Hellen..	20	60	0	4	5	1-1/2, 3/4, 3/4, 1/2	-	0	1-1/4	13
Guerin.....	9	28	0	1	9	1/2 by 1/2	-	0	1-1/4	-
Wallace.....	16-1/2	60	12-1/2	9/2	4	1 and 3/8	-	0	flat	-
La Grange.....	23	54	3	3	5	3/8, 1/2 and 5/8	-	5	1-1/2	-
Rhyolite.....	14	48	7	1	6	3/8	3/8	1	-	-

1/ Two screen sections, one outside the main trommel; the inside screen is 8-1/2 by 4 feet and is perforated with 1-inch diameter holes; the outside section is 6 by 6 feet and contains 4 feet with 1- by 1/8-inch slots and 2 feet with 1- by 1/4-inch slots. 2/ Two screen sections, one outside the main trommel; the inside screen is 8 by 4 feet and is perforated with 5/8-inch diameter holes; the outside section is 6 by 8 feet and contains 4 feet with 1/4-inch diameter holes and 4 feet with 1/4- by 5/8-inch slots. 3/ Also an outer shell with 2-inch-diameter holes. 4/ Four feet with 1/4-inch-diameter holes, 9 feet with 1/4- by 1/2-inch slots, and 12 feet with 5/8- by 1-inch slots. 5/ Also an outer shell with 3-inch-diameter holes. 6/ Four feet with 1/4-inch-diameter holes, 8-1/2 feet with 3/8- by 1-inch slots, and 1-1/2 feet with 5/8- by 1/2-inch slots. 7/ Three concentric screens; inside screen 30 inches in diameter with 2-inch round holes, middle screen 41 inches in diameter with 3/4-inch round holes, and outside 52 inches in diameter with 1/4-inch by 1-inch slots. 8/ The inside screen is 4 feet by 52 inches with 1/2-inch-diameter holes, and the outside screen is 4 feet by 70 inches, comprised of 2 feet with 1/4-inch and 2 feet with 3/8-inch-diameter perforations. 9/ The two screen sections are constructed one within the other; the inside screen has 1-inch-diameter holes and the outside 3/8-inch-diameter holes.

TABLE 7. - Movable and stationary treatment plants; general data and gold-washing and gold-saving equipment - Continued.

	Sluices		Gold-saving devices		
	Square feet	Grade, inches per foot	Type	Size, inches	Spacing, inches
Movable land plants:					
Skeels	0	0	Four centrifugal bowls.	36	0
Pantle	0	0	do.	36	0
Pan-Due	0	0	do.	36	0
Peerless	0	0	do.	36	0
Fairplay	77	2 and 1	Wire screen over burlap.	12/	12/
Blackhawk	15/447	-	Riffles, screen, matting, burlap.	-	-
Humphreys, Clear Creek	17/661	1-1/4	Riffles, screen, and corduroy.	3/16 by 1-1/4	1-3/8
Dixie	100	-	Riffles and screen on burlap.	1 by 1	1
Humphreys, Virginia City	935	1-1/4 to 1-1/2	Angle-iron riffles.	1-1/4 by 1-1/4	1-1/4
Eldorado	54	1-1/2	"T"-iron riffles.	1	1
Pikes Peak	72	1-1/2	Iron-clad wooden riffles.	1-1/2 by 1	1
Hallett	0	0	Four centrifugal bowls.	36	0
Jett-Ross	190	1-1/2 to 2	Steel and pole riffles.	2	7/8 to 1-1/2
Fisher	372	-	Iron-clad wooden riffles.	1-7/8 by 1-3/8	1-1/4
Stationary plants:					
Ash Canyon	0	0	One centrifugal bowl.	36	0
Chittendon	328	1-1/2	Iron-clad wooden riffles and screen over burlap.	1-1/4 by 1	-
Von der Hellen	262	1-1/4	Angle iron.	1-1/4 by 1-1/4	1-1/4
Guerin	70	1-1/4	Double-layer 1/2-inch screen on Brussels carpet.	-	-
Wallace	400	-	-	-	-
La Grange	500	1	Angle iron on matting.	1-1/4 by 1-1/4	1-1/4
Rhyolite	-	-	Pan-American jig, angle-iron riffles.	-	-

(See footnotes on following page.)

TABLE 7. - Movable and stationary treatment plants; general data and gold-washing and gold-saving equipment - Continued.

	Stacker		Fresh-water pumps				
	Length, feet	Width of belt, inches	Size of discharge, inches	Horse-power	Horse-power of plant	Kind of power or fuel	Recovery, 10/ percent
Movable land plants:							
Skeels	40	24	4	25	44	Diesel.	94
Pantle	48	18	4	11/ 10	38	Electric.	-
Pan-Due	80	24	-	15	80	Gasoline.	-
Peerless	25	24	-	-	30	do.	-
Fairplay	13/ 0	0	0	0	14/	do.	90 to 95
Blackhawk	16/ 70	-	6 and 5	30, 25	-	Electric.	-
Humphreys, Clear Creek	100	36	8 and 4	115, 50	18/ 480	Gasoline.	90
Dixie	36	24	-	10	19/ 34	do.	-
Humphreys, Virginia City	120	48	20/	30	21/ 710	Electric.	90
Eldorado	40	24	-	-	24-1/2	Gasoline.	97
Pikes Peak	40	24	6	25	22	do.	-
Hallett	-	-	-	-	65	do.	50 to 75
Jett-Ross	22/ 0	0	10	165	0	do.	97
Fisher	40	26	-	75	30	do.	100
Stationary plants:							
Ash Canyon	0	0	-	20	14/	do.	-
Chittendon	13/ 0	0	6	14/	14/	do.	75
Von der Hellen	13/ 0	0	23/	40	24/	do.	100
Guerin	0	0	4	14/	14/	do.	-
Wallace	-	-	-	-	30	Electric.	-
La Grange	65	24	10	50	25/ 60	do.	100
Rhyolite	80	16	-	-	-	Gasoline.	-

10/ Based on method of testing gravel deposit. 11/ Also a 40-horsepower motor for pumping water from the pit. 12/ The screens are 1-1/2- by 1-inch mesh, using No. 00 gage wire, and 1-1/2- by 1-inch mesh, using No. 1 gage wire. 13/ The oversize is dumped back in the pit by a truck. 14/ Four-cylinder automobile engine. 15/ Also a Wilfley table. 16/ Being increased to 85 feet. 17/ Includes 336 square feet of iron riffles with corduroy under the last few feet, 112 square feet of 1/16- by 1/2-inch mesh screen, and 213 square feet of corduroy cloth tables. 18/ Includes 150 horsepower for moving the screening and washing plant, 40 horsepower for stacker and feeder, 50 horsepower for the trommel, and 150 horsepower for a sand pump to pump the undersize to the gold-saving plant; the gold-saving plant uses 90 horsepower for moving; a 40-horsepower sand pump is used occasionally; all are gasoline engines. 19/ Gasoline horsepower comprises washing plant 18, stacker 6, and pump 10. 20/ 1,200 g.p.m. 21/ Includes 365-horsepower for pumping; 205 horsepower for feeder, trommel, stacker and boom, and sluice hoists; and 140 horsepower for moving the plant. 22/ Rock chute for discharging oversize. 23/ 2,500 g.p.m. 24/ Trommel is run by a 4-cylinder automobile engine; a 25-horsepower Hercules engine operates a 1,000-g.p.m. pump to remove 700 g.p.m. from the pit. 25/ Connected electric horsepower comprises trommel 50, feeder 5, and stacker 5.

TABLE 8. - Operating data at placer mines using movable or stationary treatment plants

	Shift		Operating time, hours per day	Gravel washed per hour operating time, cu. yds.	Labor			
					Excavation			
					Operator		Oilers	
	Number per 24 hours	Hours per shift			Number	Rate per hour	Number	Rate per hour
Movable land plants:								
Skeels	2	8	12.8	40	2	$1.00	0	-
Pantle	2	9	16	1/ 100	2	1.00	0	-
Pan Due	2	8	14	50	2	1.00	0	-
Peerless	1	10	8.5	-	1	1.10	0	-
Fairplay	2	10	-	20	2	.60	0	-
Blackhawk	2	10	7/ 8	70	2	1.25	0	-
Humphreys, Clear Creek	2	10	15	180	6	1.00	1	$ 0.60
							1	.50
Dixie	6/ 1	10	10	-	2	-	1	-
Humphreys, Virginia City	3	8	20	240	9	1.25	2	.75
							2	.625
							5	.50
Eldorado	1	8	-	-	2	1.50	0	-
Pikes Peak	6/ 1	10	7.5	25	2	1.50	2	.50
Hallett	1	8	-	37	3	.75	1	.40
Jett-Ross	3	8	20	75	1	1.25	3	.50
					2	1.125		
Fisher	3	8	-	73	3	1.25	3	.50
Stationary plants:								
Ash Canyon	1	8	7	4-1/2	1	-	0	-
Chittendon	1	10	9	40	9/ 1	-	0	-
Von der Hellen	2	9	16	75	2	1.28	2	-
Guerin	1	9	7	7	9/ 1	-	0	-
Wallace	3	8	-	100	-	-	-	-
La Grange	1	8	8	62	1	1.00	0	-
Rhyolite	1	12	12	10	12/	13/	0	-

(See footnotes on following page.)

TABLE 8. - Operating data at placer mines using movable or stationary treatment plants - Continued.

	Labor										
	Washing and gold saving						Miscellaneous				
	Operators		Helpers		Pumpmen		Foremen		Extras		
	Number	Rate per hour	Number	Rate per hour	Number	Rate per hour	Number	Rate per hour	Number	Rate per hour	Total number of employees
Movable land plants:											
Skeels	2	$0.50	0	-	2	$0.50	1	$1.00	0	-	7
Pantle	2	.50	0	-	2	.50	1	1.00	0	-	7
Pan-Due	4	.50	0	-	2	.50	1	-	0	-	9
Peerless	2	.50	0	-	0	-	0	-	0	-	3
Fairplay	4	.40	0	-	0	-	0	-	2/3	-	9
Blackhawk	6	-	2	-	0	-	1	-	8/5	-	16
Humphreys, Clear Creek	2 2	.70 .60	6	$0.50	4	.60	1	-	3/3	-	4/26
Dixie	1	-	0	-	0	-	1	-	2	-	7
Humphreys, Virginia City	3	1.00	3	.625	0	-	3	-	5/5	-	32
Eldorado	5	.50	0	-	0	-	1	-	1	-	9
Pikes Peak	5	.50	0	-	0	-	0	-	0	-	9
Hallett	1	.75	2	.40	1	.40	1	1.04	1	$0.60	10
Jett-Ross	4	.50	0	-	3	.4375	1	-	0	-	14
Fisher	8	.50	0	-	0	-	3	-	0	-	17
Stationary plants:											
Ash Canyon	1	-	0	-	1	-	1	-	0	-	4
Chittendon	9/1	-	1	.5625	0	-	0	-	10/2	.5625	5
Von der Hellen	6	-	10/10	-	2	-	0	-	11/6	-	28
Guerin	9/1	-	0	-	0	-	0	-	0	-	2
Wallace	-	-	-	-	-	-	-	-	-	-	-
La Grange	1	.625	0	-	0	-	1	-	10/2	.625	5
Rhyolite	2	13/	1	.50	0	-	0	-	0	-	5

1/ Includes stripping. 2/ Includes owner, a trucker, and occasionally a mechanic. 3/ Includes superintendent, assistant superintendent, and time keeper. 4/ Does not include eight men sampling ground. 5/ Includes superintendent, bookkeeper, metallurgist, assistant metallurgist, and mechanic. 6/ Also a 10-hour shift for stripping. 7/ Lost time 60 percent due to changing and remodeling plant during first few months. 8/ One amalgamator, 1 carpenter, 2 extras, and owner. 9/ Co-owner. 10/ Truck-drivers. 11/ Superintendent, mechanic, welder, carpenter, clerk, and cook. 12/ Truck drivers operate shovel. 13/ Lessees.

TABLE 8. - Operating data at placer mines using movable or stationary treatment plants - Continued.

	Fuel consumed					Wash water		
	Excavating		Washing and gold saving					
	Per hour, gallons	Per cubic yard, gallons	Per hour, gallons	Per cubic yard, gallons	Cost per gallon	g.p.m.	Gallons per cubic yard	Water reclaimed
Movable land plants:								
Skeels	-	-	-	-	-	450	670	None.
Pantle	-	-	0	0	-	-	-	do.
Pan-Due	4.4	0.091	-	-	-	400	480	do.
Peerless	5.2	-	3.5	-	$0.17	-	-	do.
Fairplay	14/ 2	14/ .1	15/ 2.5	15/ .13	14/ .13 15/ .17	-	-	do.
Blackhawk	5.0	.07	0	0	-	16/ 1,300	1,110	Recirculated.
Humphreys, Clear Creek	17/ 30 19/ 2.5	17/ .167 19/ .014	-	-	17/ .105 19/ .105	18/ 2,300 -	580 -	None.
Dixie	-	-	-	-	-	600	-	20/
Humphreys, Virginia City	0	0	0	0	0	4,200	1,400	Some.
Eldorado	17/ 8.75	-	-	-	.175	420	-	-
Hallett	-	-	-	-	-	-	-	Recirculated.
Jett-Ross	3.1	.05	0	0	.115	21/ 4,000	3,200	None.
Fisher	1.04	.014	1.25	.017	.205	560	450	do.
Stationary plants:								
Ash Canyon	17/ 3	.67	-	-	.145	50	670	do.
Chittendon	3.2	.08	5.0	.125	.15	800	1,200	do.
Von der Hellen	22/ 21.1	23/ .29	6.7	.09	.14	2,500	2,000	do.
Guerin	24/ 3.9	24/ .56	-	-	.14	-	-	do.
Wallace	-	-	-	-	-	3,000	1,800	-
La Grange	17/ 6.25	.10	-	-	.155	800	770	None.
Rhyolite	3	25/ .12	7	26/ .7	27/ .135	275	28/ 1,650	Recirculated.

14/ Diesel oil. 15/ Gasoline. 16/ Includes 300 g.p.m. added to sluices. 17/ Gasoline for entire plant. 18/ Includes 1,500 g.p.m. for washing and 800 g.p.m. additional for the gold-saving plant. 19/ Diesel oil for entire plant. 20/ In midsummer only 300 g.p.m. fresh water is available; 300 g.p.m. more is obtained by recirculation. 21/ No screening done. 22/ Includes 11.7 gallons per hour for trucking. 23/ Includes 0.16 gallons per cubic yard for trucking. 24/ Includes hoisting and washing. 25/ Includes stripping. 26/ Includes 20 gallons per 12 hours for trucks and 25 gallons per day for bulldozer. 27/ Twenty gallons per day at 17-1/2 cents. 28/ Twenty-five g.p.m. new water; water consumption 150 gallons per cubic yard.

The gravel is charged to a hopper in most of the movable land plants visited. In several of the washers an even distribution of the feed is obtained by some mechanical type of feeder. The others attempt to obtain a uniform flow into the washer by washing the gravel down with sprays or by hand feeding.

A wide variation exists in the design and mounting of the trommels. The trommel lengths range from 12 to 32 feet and the diameters from 48 to 84 inches. Two operators use a trommel with two screen sections, one being about a foot outside the other. Two other operators have placed a screen lining inside of old trommel shells. Perforations in the outer shells are 2 and 3 inches in diameter, respectively.

The Jett-Ross plant, which does not use a screen, depends upon sprays to disintegrate the gravel and wash it through a grizzly directly to sluices.

The slope of the trommels where data were available ranged from 7/8 to 2 inches per foot, with 1 inch per foot being favored. Less standardization exists in the speed of rotation for trommels on movable land plants than on floating plants. The range is from 9 to 20 r.p.m.

Table 7 shows the wide variation in size, shape, and arrangement of perforations. Increasing the size of the holes from section to section along the screen is a common method used to obtain an even distribution of the feed and a more even flow. Slotted perforations, particularly in the last few feet of the screen, are used by a few operators to assure catching elongated and flat nuggets of gold. At nine of the operations listed gold is saved in sluices, and at five, in Ainlay bowls.

Sluices generally are mounted beneath or at the side of the trommels; the boxes range from a single sluice, through which all the undersize passes, to banks of several sluices. Each size of gravel from the trommel is passed through a separate box. The size of sluices and types of riffles are shown in table 7. The bowls, where used (except the Pan-Due), are mounted beneath the trommel and are fed from a distributor box through launders. All bowls are 36 inches in diameter and turn at 100 r.p.m.

Descriptions of one typical plant of its class (Pantle) and five unusual plants follow. One Alaska operation is described, chiefly because of its unusual excavation problem.

Pantle

The Pantle Bros., operating in the Lincoln district, California, have a movable land plant consisting essentially of a hopper, trommel, centrifugal bowls, and stacker. It is typical of this type of plant using Ainlay bowls.

A 1-cubic-yard dragline is used to strip about 10 to 12 feet of overburden from the deposit. The overburden is overcast into the pit already worked. The remaining 6 feet of gravel and 2 feet of decomposed granite bedrock is fed to the plant. The shovel works on two 9-hour shifts and alternates between stripping and digging gravel, spending about half of the time on each operation.

The plant weighs about 15 to 16 tons; it is 9 feet wide and 30 feet long (fig. 6b). It is mounted at the rear on caterpillar treads 5 feet long, and on 8-inch steel wheels in front. The gage is 12 feet and the distance from front to rear axle is 14 feet. The plant is powered with a 35-horsepower electric motor, using about 19 horsepower, and a 2-horsepower motor for the stacker.

The gravel is charged to a 3-cubic-yard hopper and is hand-fed to a 4- by 10-foot trommel. The trommel consists of a 3-foot blank section equipped with 3-inch lifters, 8 feet of screen perforated with 5/8-inch holes, and 3 feet of blank screen. A second 8- by 6-foot screen is constructed around the outside of the screen section. This outside screen consists of 4 feet with 1/4-inch round holes and 4 feet with 1/4- by 5/8-inch slots.

The undersize from the trommel, consisting of from 40 to 50 percent of the gravel, is distributed to four 36-inch Ainlay centrifugal gold savers running at 100 r.p.m. The tail from the bowls discharges into a sump and is pumped by a 4-inch sand pump to the pit back of barriers made in overcasting.

A 48-foot stacker with an 18-inch belt discharges the rock to the abandoned pit. The stacker may be swung laterally by hand and raised or lowered with blocks and tackle.

Humphreys, Clear Creek

The mine of the Humphreys Gold Corporation on Clear Creek is about 30 miles from Denver, Colo. Gardner and Guiteras[7] describe the Humphreys Gold Corporation placer operations on Clear Creek, Colo.; the same operations have been described by Schloss.[8]

The gravel is excavated with two 2-1/2-cubic-yard draglines powered with 150 horsepower gasoline engines on the bank and a 1-1/4-cubic-yard Diesel shovel with a 130-horsepower engine in the pit. An essential difference between this and other similar plants is the gold-saving plant that is separate from the washing equipment. Gardner and Guiteras[9] describe the arrangement as follows:

7/ Gardner, E. D., and Guiteras, Jos. R., Placer operations of Humphreys Gold Corporation, Clear Creek, Colo.: Inf. Circ. 6961, Bureau of Mines, 1937. 16 pp.

8/ Schloss, Charles M., Clear Creek Dry-Reclamation Placer Gold Mining: The Mining Congress Journal, Sept. 1935, pp. 58-60.

9/ Work cited, p. 39. (See footnote 7.)

The undersize from the trommel is pumped by an 8-inch manganese-steel sand pump through an 8-inch line to the gold-saving plant. The pump is driven by a 150-horsepower gasoline engine. The maximum length of the pipe line is 600 feet. ***. The sand pump breaks up any balls of clay that get through the screen and thus contributes to the washing of the undersize. ***. The gold-saving plant is mounted on the chassis of a crawler crane and is propelled by a 90-horsepower gasoline engine. The caterpillar treads are 12 feet long, 15 inches wide, and have a 10-foot gage.

The ground is leveled off before the plant is set on a new site. The machine is equipped with hydraulic jacks for leveling it across the line of sluices should it be found necessary. ***.

The undersize from the screening plant is discharged into a distributing box at the top of the gold-saving plant, from which it flows through pipes to sluice boxes. Clear water from the pit is pumped into the distributing box through a 6-inch pipe. The gold-saving equipment consists principally of 8 main sluices set in two banks of 4 sluices each, one bank on each side of the plant. The sluices are each 14 inches wide and 48 feet long. The first 36 feet contains riffles and the bottom of the last 12 feet is a screen with 1/16- by 1/2-inch holes. The speed of the top of the water through the main sluices is a little less than 10 feet per second. The grade of all of the sluice boxes is 1-1/4 inches to the foot. The undersize from the screens in the main sluices drops to the head of eight 20-inch sluices, four on each side of the plant. They are 16 feet long and are lined with corduroy cloth. The cloth plant was put in to recover extremely fine gold that is carried over the riffles in the main sluices. It is thought that this gold comes mainly from mill tailings. The lower ends of the corduroy boxes are suspended from a rope block, which permits easy control of the grade.

The riffles in the main sluices are strips of 3/16-inch iron; they are 1-1/4 inches high and are set 1-3/8 inches apart with the tops sloping down current. They are welded to end pieces in sections 3 feet long.

Humphreys, Virginia City

The Humphreys Gold Corporation operates a large movable plant on Alder Gulch, Virginia City, Mont. Operations began in July 1935. The operation has been described by Corry.10/

The gravel has been worked before by drift mining. The range in depth is from 3 to 28 feet, the average being about 17 feet. The bedrock of volcanic ash is dug to a minimum of 6 inches, as enrichment occurs to about this depth. Few boulders exist in the gravel.

The gravel is dug with two 2-1/2-cubic-yard, 100-horsepower, electric draglines, and an auxiliary 1-3/4-cubic-yard power shovel is used to clean bottom and reach corners not within reach of the draglines. The shovel dipper has a flat lip to facilitate cleaning bedrock.

The washing plant is a huge machine weighing 500 tons. It is mounted on two tractor chassis and a third set of caterpillar treads. The plant is propelled by individual motors for each tractor chassis. The treads run on mats that are moved up by the draglines. The plant is on the bank; it was designed to be used in this position principally because it was feared it would bog down on the soft wet bedrock.

The gravel is discharged into a 20-cubic-yard hopper and fed to a trommel by a 48-inch plate belt feeder. The trommel is 84 inches in diameter and 24 feet long; it is made up of a 4-foot blank section on the feed end and 18 feet of screen perforated with 1-1/8-inch round holes, and a 2-foot blank section at the lower end. A header spray using 1,500 g.p.m. washes the gravel as it enters the trommel; midway in the screen is another spray using 1,500 g.p.m. of return water from the overflow from the dewatering screws and another using 1,200 g.p.m. of fresh water.

The oversize discharges to a 48-inch belt conveyor 120 feet long and is conveyed to the spoil pile in the pit. The undersize goes to a sump and is elevated by a 12-inch sand pump, having a capacity of 4,200 g.p.m., to a distribution box, from whence it goes to 12 sluices, 14 inches wide and 53 feet long, with adjustable grade control. These discharge into four return sluices each 29 inches wide and 20 feet long. Gravel from the return sluices discharges into twin dewatering screws 24 inches by 19 feet long. Solids are discharged onto the stacker belt and the slime overflows and is pumped to a settling pond in the rear of the plant.

Sluices are equipped with Hungarian riffles consisting of iron bars 14 inches long, 1-1/4 inches high, and spaced 1-1/4 inches apart. They have a downstream batter.

10/ Corry, Arthur V., Dragline Installation for Recovering Gold at Virginia City, Mont.: Mining and Metallurgy, Oct. 1936, pp. 467-470.

Jett-Ross

Jett-Ross Mines, Inc., is placer-mining on Big Atlantic Gulch, Atlantic City, Wyo. The design of the washing plant is unusual. Most of the information on gravel and excavation is shown in tables 5 to 8.

The washing plant (fig. 7) weighs about 30 tons, is made of wood, and is mounted on skids. It is 40 feet long and 12 feet wide. The plant is towed forward by the dragline.

Gravel is dumped into a hopper 20 feet above the ground. The oversize from a grizzly having 6-inch spacing between the bars is discharged back to the pit by a rock chute. The gravel is disintegrated and washed to a sluice by water from a 10-inch centrifugal pump powered by a 165-horsepower, 4-cylinder motor.

The sluice is 88 feet long and 26 inches wide and has a grade of 1-1/2 to 2 inches per foot. It is equipped with alternating sections of steel hungarian and pole riffles. The steel riffles are 2 inches deep and spaced 7/8 to 1-1/2 inches apart; they are made up in 24- by 25-1/2-inch sections. The pole riffles are in sections 48 by 25-1/2 inches.

Dixie

Dixie Placers, L. J. Burrows, manager, is operating a dragline shovel and movable dry land washer on a placer deposit on Crooked Creek near Dixie, Idaho County, Idaho.11/ The operating season opens between April 15 and May 1, and closes between October 1 and October 15 each year. Mining has continued steadily for three seasons. It will be necessary to mine a fourth season to work out the deposit.

The gravel deposit is 3-1/2 miles long, 50 to 150 feet wide (average 120 feet), and about 13 feet deep. Large boulders are numerous, particularly in the narrow portions of the channel; parts of narrow channel are left as the gravel cannot be dug by the equipment at the mine. Bedrock is composed of decomposed granite and schist cut by hard dikes. About 6 to 12 inches of the bedrock is dug and washed.

Excavating is done by means of a Northwest gasoline-powered dragline shovel with a 45-foot boom and a 3/4-cubic-yard bucket. A 60-horsepower gasoline-powered bulldozer is used to clear the ground ahead of the dragline and to do other work. About 10 feet of the surface is stripped by the dragline during a 10-hour night shift.

The movable washing plant is 33 feet long, 10 feet wide, and 16 feet high, and it weighs 25 tons. It is mounted on eight 28- by 12-inch wheels, grooved to fit round timber track.

11/ Information furnished by S. H. Lorain, mining engineer, Bureau of Mines, Moscow, Idaho.

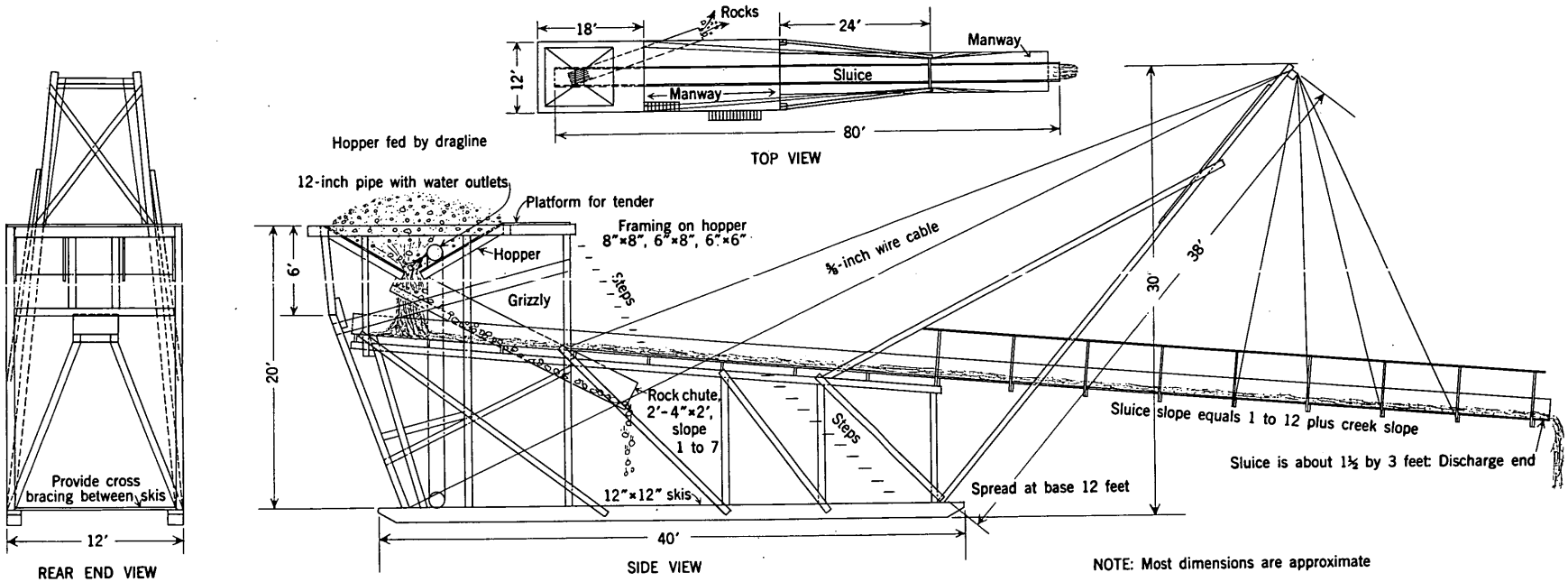

Figure 7.—Jett-Ross gold washer.

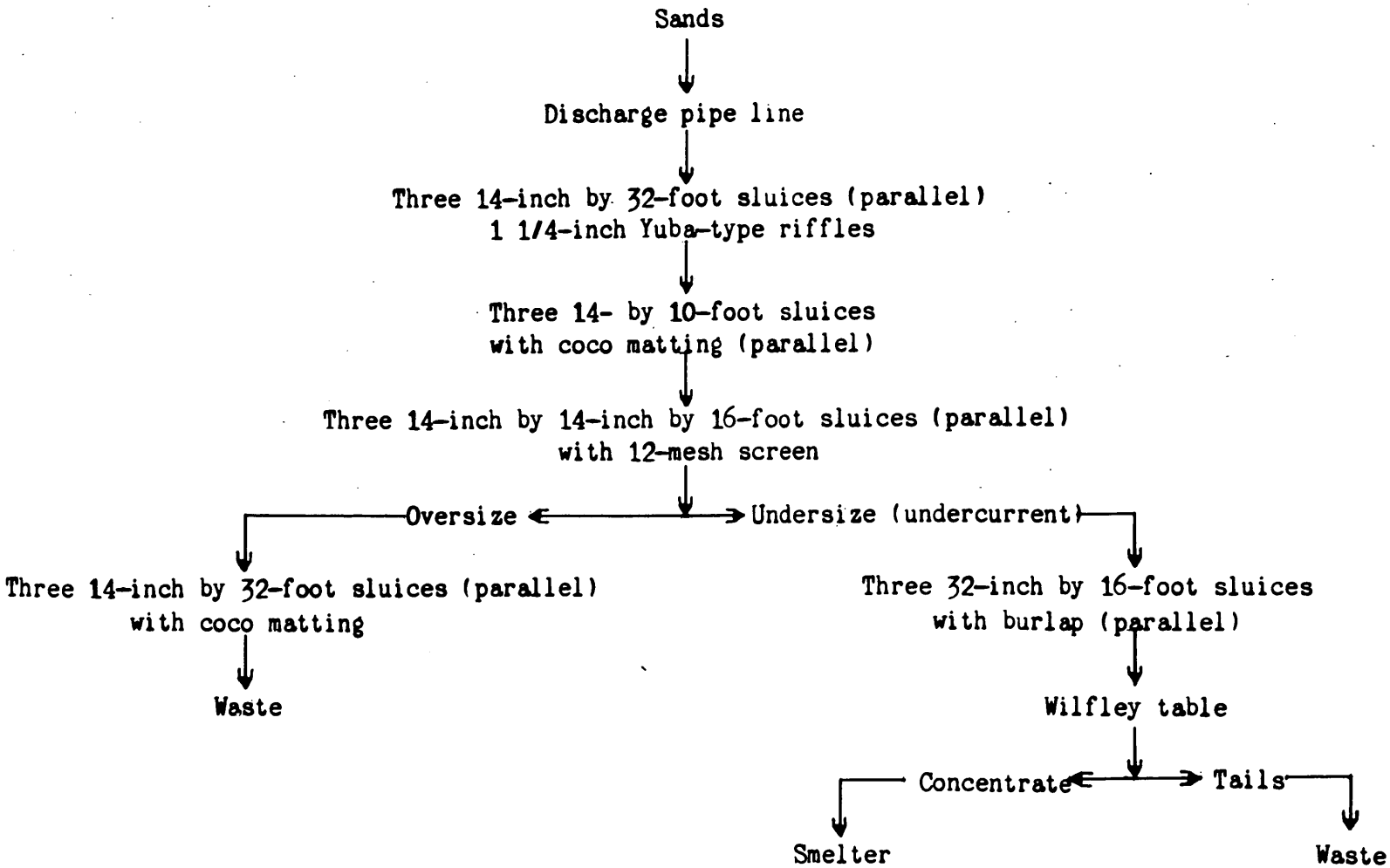

Figure 8.- Flow sheet, Blackhawk placer.

Gravel is discharged into a small steel hopper and washed and screened in a 48-inch by 19-foot trommel screen. The oversize (plus 1/4 inch) is discharged to a 36-foot stacker and discarded. The undersize passes over standard dredge tables suspended in swinging cradles under the trommel. Tables are 18 inches wide and have an area of about 100 square feet. Gold is saved in Yuba-type dredge riffles 1 inch wide and spaced 1 inch apart. In some of the sluices these riffles are followed by 1/2-inch-mesh, no. 9, wire smoke-stack screen laid over burlap. Undersize finally discharges from the last table sections to a drag-type dewaterer, which delivers the dewatered sand to the tailing stacker.

The plant uses about 600 gallons of water per minute. This is provided by the normal flow of Crooked Creek until midsummer, when the supply drops to about 300 g.p.m.; the additional requirements are made up by recirculating half of the water discharged from the plant during this period.

During 1936, a total of 229,000 cubic yards was dug; about a quarter of this was washed. The cost before depreciation, based on yardage dug, was $0.075 a cubic yard.

Blackhawk

Edward Manion is placer mining on a branch of Clear Creek just below Blackhawk, Colo. Gold amalgam and concentrate from old stamp mills constitute part of the value recovered. The lay-out comprises a shovel, a movable washing plant, and a stationary gold-saving unit. Operations began in the middle of April 1937; 50,000 cubic yards had been handled to the middle of September 1937. The capacity is 1,400 cubic yards on two 10-hour shifts. Only about 40 percent of the time has been spent in digging gravel, owing to continual remodeling of the plant.

Gravel is 25 to 27 feet deep and is reported to run a little under $1.00 per cubic yard. The gold is concentrated chiefly on the bedrock, although some is distributed through the entire depth. Bedrock, comprising granite and schist, is mined to a depth of 12 to 15 inches.

The gravel is dug with a 1-1/4-cubic yard shovel powered by a 150-horsepower gasoline engine. Washing and screening is done in a movable plant with a trommel screen back of the shovel. Oversize is stacked in the pit by a 70-foot belt stacker. The stacker is being lengthened to 85 feet in order to gain sufficient height to dispose of the gravel. Undersize is pumped to a gold-saving plant.

The gold-saving plant, comprising sluices and a Wilfley table, is on top of the tailings pile, where it can not be washed away by cloudbursts. Sands are pumped 150 to 600 feet to the plant by a 6-inch pump run by a 50-horsepower motor through a 6-inch pipe line. About two-thirds of the line is welded steel pipe and one-third is rubber hose. The steel pipe lasts from 80 to 90 days, and some of the hose has been in service for 3 years. When visited, the flow sheet of the gold-saving plant was arranged as shown in figure 8.

Washing and disintegration are promoted materially by the practice of pumping sands to the sluices.

No quicksilver is added to the sluices; however, 10 to 12 pounds that come from amalgam lost during earlier milling operations are recovered during clean-up.

Water is discharged back on the rock pile and permitted to clarify by percolation through the gravel; it is caught and recirculated.

Alaska

The following description[12] of an Alaskan placer mine is typical of dragline placer operations in the Fairbanks and Circle districts. The working season is from May to October. The gold-bearing gravel is about 5 feet thick and is overlain by 6 to 20 feet of barren silt. The whole deposit is frozen solidly. The surface is protected from summer thawing by a foot of moss. In mining, the moss is first scraped off by a bulldozer. As the silt is thawed by the summer sun, it is scraped off in layers by the bulldozer until the gravel is reached. Some of the gravel is naturally thawed by subsurface waters; the rest is thawed by the sun at a rate of about 6 inches in 24 hours. The frozen gravel is uncovered by the bulldozer each day. The thawed gravel and 1 to 2 feet of bedrock are dug by a gasoline-powered dragline with a 1-1/2-cubic-yard bucket and dumped into the hopper of a washing plant.

The washing plant consists of steel hopper and sluice mounted on steel skids. Gravel is disintegrated and washed to the sluice by a hydraulic giant to which water is supplied by a pump; the water is returned from a pond made by temporary earth dams below the plant.

The plant is operated by five men on each of two shifts. The cost of the installations in the district is stated to be from $50,000 to $80,000.

STATIONARY PLANTS

General and detailed information concerning placer mines with stationary washing plants is given in tables 5 to 8. Generally, operating costs with this type of plant are higher than with movable land plants because of the additional expense for transportation of the excavated gravel to the plant. The stationary plants have an advantage over the movable plants in that they are cheaper to build and can be more substantially constructed on a solid foundation. They can be placed at the most advantageous site for efficient disposal of tailings. Moreover, water from the plant does not get into the pit and cause difficulties, as it sometimes does at mines using movable plants. Some deposits are only amenable to working with a stationary plant. To be mined successfully, however, the gravels usually must be relatively

12/ Information furnished by H. B. Humphrey, Safety and Health Branch, Bureau of Mines.

richer and mined on a fairly large scale. Relatively few deposits rich enough to be worked by this method on a small scale remain. Most of them have been worked previously by hand and other methods.

With the exception of the Ash Canyon, the seven plants listed in this paper were successful. Brief descriptions of the plants follow.

Ash Canyon

The stationary washing plant operated by R. R. Meier in Ash Canyon, Cochise County, Ariz., has some interesting problems. The deposit consists of about 80 percent of barren overburden, which had to be stripped; the narrow canyon, with steep walls, precluded dumping the barren material at the side of the gold-bearing gravel. The power shovel on hand could not dispose of the stripping far enough back of a movable plant used in the pit to leave working room. The washing and screening equipment was then moved to a new plant on a hillside, 1,500 feet by road and about 75 feet vertically above the pit.

The gravel is tight, requiring a power shovel to dig it. About 8 feet are stripped and cast back into the pit; 2 feet of enriched gravel and 2 or 3 inches of a cemented gravel bedrock are dug and transported to the washing plant in a 1-1/2-cubic-yard truck.

The gravel is dumped onto a grizzly with bars spaced 2-1/2 inches apart. The plus 2-1/2-inch material is discharged by a rock chute to the canyon below. The undersize goes to a hopper that discharges to a 3- by 8-foot revolving screen. The screen is made of 1/4-inch steel, with 1/2-inch round punched holes; it revolves at 15 r.p.m. A spray 18 inches in from the feed end washes the gravel. The oversize is discharged to a chute and passes back into the canyon. The undersize goes to a 36-inch Ainlay bowl containing iron riffles. The bowl discharge goes into the gulch. About 50 g.p.m. of water was pumped from a well.

The plant is powered by an old 4-cylinder automobile engine. Difficulties with the old engine materially reduced the operating time per shift. Lost time from all causes reduced the average daily yardage handled to such an extent as to make the operation unprofitable.

Chittendon

In March 1937, Charles N. Chittendon was operating a placer on Old Virginia Ravine, 6 miles from Lincoln, Calif. About 400 cubic yards of gravel, loose measure, are washed daily on one 10-hour shift in a stationary washing plant. About 85,000 cubic yards, loose measure, was washed in 1936.

The gravel is up to 20 feet deep; the average is 15 feet. Although it is tight, no boulders and only a small amount of clay are encountered. It is not stripped. The digging unit is a 1/2-cubic-yard gasoline shovel. A caterpillar tractor with a bulldozer blade is used for cleaning bedrock; it also is employed for building roads and doing other jobs in connection with the operations.

The gravel is transported about 400 feet by two trucks to the washing plant, which is outside the pit limits, and is dumped into a hopper and hand-fed to a 75-foot conveyor belt, which discharges into a trommel.

The trommel is 52 inches by 12 feet long, with an outer screen. The scrubber section is 8 feet long; it contains two 4-inch retarding rings that reach half way around the periphery and an 8-inch ring at the lower end of the section. The inside screen section is 4 feet long and has 1/2-inch round perforations. The bridging is 2 inches. The outer screen is 72 inches by 4 feet; the first 2 feet has 1/4-inch perforations and the last 2 feet has 3/8-inch perforations. Disintegration in the inside screen is assisted by two retarding rings, lifter bars made from 2-inch angle iron, and the steel member of the trommel frame. The trommel slopes 1 inch to the foot and revolves at the rate of 14 r.p.m.

Wash water is pumped at the rate of 600 to 800 g.p.m. under a pressure of 20 pounds per square inch into 4-inch slotted pipe that extends the entire length of the trommel. The oversize from the screen goes to a hopper, from which it is hauled by trucks.

The sluices, consisting of three 14-inch, one 16-inch, and one 24-inch box, run at right angles to the trommel on one side. They are 48 feet long and slope 1-1/2 inches to the foot. The first 15 feet of the boxes contain 1-1/4- by 1-inch wooden riffles, and the remaining 33 feet are equipped with iron screen over burlap.

The tailing is pumped a distance of about 100 feet through a 5-inch pipe by a 4-inch sand pump to a settling pond.

The plant and pumps are run by gasoline engines.

Von der Hellen

Wm. Von der Hellen, grading contractor, operates a stationary washing plant on McConnel Bar about 17 miles northwest of Yreka, Calif., or 6 miles from the junction of U. S. 99 on the Klamath River. The operation started on Feb. 5, 1937; an average of about 1,200 cubic yards is handled per day on two 9-hour shifts.

Gravel dug from a pit on the bar is about 40 feet deep, from which up to 12 feet are stripped as barren overburden. The bottom of the pit is about 55 feet vertically below the washing-plant hopper and 25 feet below the normal water level of the river.

The gravel is tight, difficult to dig even with a power shovel, and contains about 5 percent of boulders over 12 inches in diameter. Boulders over 2 feet are sorted out by the shovel. The bedrock is serpentine, of which from 1-1/2 to 2 feet is dug with the gravel.

A 1-1/2-cubic-yard gasoline-powered shovel is the digging unit. The gravel is transported to the washing plant and the oversize hauled away by trucks. An average of 9 truck shifts are worked daily on two 9-hour shifts.

The loaded trucks are backed up a dirt ramp and dumped into a 6-cubic-yard hopper at the top of the washing plant. The plant consists of a trommel and sluice. The gravel is fed to the trommel by means of a 2-inch stream of water under a pressure of about 12 pounds per square inch from a manually operated hose.

The trommel is 5 by 20 feet; lifter bars or retarding rings are not used because of the coarse material handled (up to 2 feet). It is made up of four 5-foot sections all perforated. The first section contains 1-1/2-inch, the next two 3/4-inch, and the last 1/2-inch holes. The usual order of graduated hole size, with the smaller at the top and the larger at the discharge end, is reversed. Since all the undersize drops into a single sluice box running parallel to the trommel, distribution appears to be unimportant; however, surges caused by dumping each load of gravel would be reduced and washing improved by the standard practice.

The trommel has a slope of 1-1/2 inches to the foot and rotates at 14 r.p.m. A 6-inch spray pipe containing 1-inch-diameter spray holes washes the gravel within the trommel; the pressure is about 12 pounds per square inch.

The undersize is caught by a 4- by 16-foot sluice beneath the trommel and is conveyed to a second sluice 34 inches wide and 70 feet long. The slope is 1-1/4 inches to the foot. Standard 1-1/4- by 1-1/4-inch angle-iron riffles spaced 1-1/4 inches apart are used in both sluices. The riffles are made up into sections by welding iron header-straps to each end. Quicksilver is fed at the head of the second sluice to a section of 3/4-inch steel plate perforated with 1-1/4-inch diameter holes; the bridge is 3/4 inch.

Guerin

Omer and Steve Guerin own and operate a small but successful placer (fig. 3b) on McConnel bar near the Von der Hellen operation. The placer pit and plant are on a part of the bar forming an island in the Klamath River.

The plant was built in April 1936. It is operated on one 9-hour shift by the two brothers; 2 hours are required to pump out the pit and get started and 7 hours are used for digging and washing. The plant has a capacity of 100 cubic yards a day; an average of 50 cubic yards is washed daily.

When visited, the bottom of the pit was in a good pay streak about 27 feet from the surface; the real bedrock had not been reached. The gravel is free of clay and similar to that at the Von der Hellen pit; about 10 percent consists of boulders over 12 inches in diameter.

The digging unit is a 3/8-cubic-yard, 3/4-revolving gasoline shovel. The shovel loads a 3/4-cubic-yard skip that is hoisted and swung to the hopper of the washing plant by a stiff-leg derrick. The derrick and washing plant were constructed of local timber.

The gravel is dumped into a 5- by 5-foot hopper, from which it is washed into a 28-inch by 9-foot revolving screen having a slope of 1-1/4 inches to a foot. The trommel consists of a frame of angle iron with 1/2-inch square-mesh screen welded around the circumference.

The oversize is discharged by a rock chute to the river. The undersize is washed successively in 3 boxes, one below the other. The first box is 28 inches by 6 feet and the second and third are 28 inches by 12 feet. They are equipped with a double layer of 1/2-inch, square-mesh, woven screen laid on brussels carpet. The slope of the boxes is 1-1/4 inches to a foot; they discharge the tailings into the river.

All the equipment is powered with second-hand automobile engines.

Wallace

The Wallace, Calif., plant of the Gold Gravel Product Co. began operations in September 1932. After three false starts it operated continuously from the spring of 1933 to May 1936 when the deposit was exhausted and the plant dismantled. The plant capacity was 100 cubic yards per hour; 1,066,000 cubic yards were handled during the life of the mine.

Gravel was excavated by a 1-1/4-cubic-yard, full-revolving, caterpillar-tread, gasoline-driven shovel with a 30-foot boom and a 92-horsepower engine. Haulage equipment comprised two 8-ton and one 5-ton Plymouth gasoline locomotives, two 17-ton steam locomotives, and four 4-cubic-yard and four 6-cubic-yard cars. Gravel was hauled 1/2 mile to the washing plant; rock reject at the plant was hauled to a nearby waste dump.

An 8-inch grizzly rejected the oversize. Washing was done in a 5-foot diameter by 16-1/2-foot trommel screen provided with lifter bars and a spiral vane 12 inches high and making 15 turns through the length of the screen. The first part of the trommel was a scrubber and the last 4 feet was screen perforated with 1-inch round holes. An outer screen with 3/8-inch holes circled the 4-foot section. The plus 3/8-inch minus 1-inch material was run through a 16-inch sluice, and the minus 3/8-inch sands went through a 32-inch sluice; each was 100 feet long.

About 3,000 gallons of water per minute was pumped for washing, or 1,800 gallons per cubic yard of gravel.

The following table gives the estimated cost per cubic yard for the total 1,066,000 cubic yards of gravel excavated and washed:

Item	Cost per cubic yard
Excavation	$0.025
Transportation	.02
Washing	.025
Tailings disposal	.02
General	.01
Total direct	.10
Indirect	.03
Total1/	.13

1/ Excludes royalties of 10 percent and losses encountered not connected with the operation discussed.

Rhyolite

The Rhyolite placer is in Limerick Canyon, 13 miles from Oreana, Nev. In May 1937, it was being operated under lease by C. E. Swartz and three partners. The gravel is dug with a 5/8-cubic-yard shovel and hauled 1 mile in two 2-1/2-cubic-yard trucks. Fifty loads are hauled daily. About 10 feet of the deposit was first stripped and overcast back into the finished pit; the 4 feet above a false bedrock comprises the pay streak.

The gravel is dumped from the trucks into a 3-yard hopper and fed automatically into a 48-inch by 14-foot trommel. The first 7 feet and last 1 foot of the trommel are blank. The gravel is retarded in the trommel by a screw that makes six turns. The screen section has 3/8-inch round perforations; the bridging is 3/8 inch. Four nozzles, consisting of 2-inch flattened pipes, are used in the hopper and two in the screen section for washing the gravel. The oversize from the screen is discharged by a 16-inch by 80-foot belt elevator. It is then stacked by a bulldozer. The gravel contains some clay; all of it is not emulsified and some passes up the stacker as clay balls. The undersize from the screen first goes to a small Pan-American pulsating jig, which saves 90 percent of the recovered gold. The pulp then passes through a 24-inch by 24-foot sluice with angle iron and steel rail riffles into a drag classifier, 2 feet wide by 3 feet deep and 4 feet long. The sands are discharged onto the stacker belt and the overflow goes to a 20,000-gallon thickening tank and thence to an 8,000-gallon settling tank. Valves at the bottom of the thickener are opened for 2 to 3 minutes to discharge the mud; this contains about 50 percent moisture. The settling tank is cleaned out by hand about once a week.

The plant handles 125 cubic yards in a 12-hour shift. Two of the partners run the truck and two work in the plant. A fifth man is employed to run the bulldozer and do odd jobs. The truck drivers load their own trucks with the shovel. Stripping is done on overtime and concurrently with mining the pay streak.

Water is obtained from a spring and conveyed through a pipe to a tank at the plant; 18,000 gallons of fresh water is used daily.

The plant is run by a 35-horsepower commercial gasoline engine and the water-recirculating pump by an old automobile engine. A total of 125 gallons of gasoline is used daily by the plant, bulldozer, trucks, and shovel. The rental of the plant is $1,000 per month. Supplies other than gasoline average about $300 per month. Counting the partners' time at $6 per day, the indicated cost of handling the gravel through the washer is $0.76 per cubic yard.

La Grange

La Grange Placer Mines, P. C. Alexander, superintendent, operate a placer mine on the south bank of Tuolumne River about 3/4 mile west of La Grange, Calif. The plant comprises an open pit, stationary washer, and gold-saving unit. The plant began operating July 4, 1937, and had operated 75 days when visited. Operations were on one 8-hour shift per day. A total of approximately 28,000 cubic yards had been dug and washed; the plant capacity is 500 cubic yards a shift.

About 4,000,000 cubic yards are said to have been proved by test pits spaced 50 feet apart.

The gravel is tight, contains few boulders over 12 inches in diameter, and no troublesome clay. The pit is 20 to 30 feet deep, the average being 25 feet. Bedrock is volcanic tuff and is drained by a ditch to the adjoining river bed.

A revolving shovel powered by a 6-cylinder gasoline engine and equipped with a 3/4-cubic-yard dipper excavates the gravel. Two 3-cubic-yard trucks haul the gravel 600 feet to the grizzly over a bin at the washing plant at an elevation of about 80 feet above the pit.

Gravel is fed evenly from the 20-cubic-yard bin to a trommel of the washing plant by an electrically operated, plate-type, arc-gate feeder. The oversize from the trommel is discharged to the river bed by a 65-foot stacker; the undersize passes over side tables at right angles to the trommel, is then collected in a single longitudinal sluice, and finally discharged to the river bed.

Water is pumped from the Tuolumne River, 1,300 feet against a head of 156 feet to the plant through a 10-inch pipe. A turbine pump run by a 50-horsepower motor delivers the water at the rate of 800 g.p.m. and a pressure of 40 pounds per square inch.

The entire equipment, comprising shovel, trucks, washing and gold-saving equipment, and pump, is new. The plant is laid out on a hillside for efficient operation. Trommel, sluices, and riffles are patterned after those used on the more successful floating boats.

EXCAVATING EQUIPMENT

Draglines and power shovels

Diesel-engine power units are used on 18 of the 24 draglines listed that serve floating washers; four are powered with electric motors and two with gasoline engines. One operator uses a gasoline engine-powered shovel. Two Diesel-powered draglines, one Diesel-powered shovel, and three draglines using gasoline are employed on operations where data were available for the movable land plants and stationary plants. Fifteen excavators used gasoline engines, 11 of which were on shovels and 4 on draglines. Two electric draglines and one electric shovel were being used at one large movable plant operation in Montana (see tables 2 and 6).

Dragline excavators serving floating plants range in size from 1-1/4- to 3-cubic-yards bucket capacity; the 1-1/4- and 1-1/2-cubic-yard sizes are more common. Those serving movable land plants range from 1 to 2-1/2 cubic yards bucket capacity; the 1-1/4-cubic-yard size is more common. At two large operations, two 2-1/2-cubic-yard draglines, with a small auxiliary shovel, are digging simultaneously. A common practice is to buy a dragline equipped with a bucket 1/4 cubic yard smaller than the rated capacity of the machine to provide reserve power for contingencies, prolong the life of the unit, and reduce repairs.

The capacity of the shovels used at stationary plants ranges from 3/8 to 1-1/4 cubic yards; most of them are old gasoline-powered shovels, but they give fairly good service.

Cables

Shovels are equipped with a hoist and a boom support cable; occasionally some of the smaller shovels are equipped with a cable-type crowd. The dragline, in addition to the hoist and boom cables, requires a drag cable. Usually, cables recommended by the excavator dealer are used; they are constructed to withstand extreme wear and sudden strains and must have maximum flexibility. The boom support cables are subject to little wear and last indefinitely.

Ordinarily, hoist and drag cables are run to failure. The drag cable on a dragline generally is an eighth of an inch larger in diameter than the hoist, owing to the harder service in digging over hoisting. Occasionally, both cables are of the same diameter; the hoist, being twice the length of the drag, may be cut to make two drag cables, thereby increasing the ultimate life and usefulness of the cable.

According to available data, the average length of service for hoist cables on draglines was from 150 to 900 hours, the average being about 500 hours for all operations listed. The life of drag cables ranged from 150 to 400 hours, with an average for all of about 200 hours. Hoist cables

on shovels lasted from 300 to 600 hours, but few data are available. A comparison between hoist or drag cables on draglines and hoist cables on shovels is impracticable, since larger cables are used on shovels of similar capacity.

Teeth

A considerable saving in cost of supplies is claimed by most of the placer operators who utilize some method of building up worn bucket and dipper teeth. Three general types of teeth are used; one type consists of two parts, the base (often called an adapter) and the point; a second type incorporates the base as an integral part of the bucket, and only the point may be removed; the third type is made up of the base and point in one single detachable unit. The cost of teeth varies greatly, depending mainly upon the type, size, and material from which they are made; the range is from about $2.75 to $8.50 per tooth.

Table 9 contains data on rebuilding teeth at a few typical placer operations. The life of teeth varies because of the wide range in hardness and abrasize qualities of the gravel at different mines.

Several methods of rebuilding and prolonging the life of teeth are in use. Some operators reconstruct the entire point from welding rod. Another method is to weld on repointers; when these are used, care is taken not to wear into the stock of the tooth or it will have to be rebuilt before the repointer is applied. The use of applicator bars has found favor with many operators; these may be bought from several manufacturers of steel products and are highly recommended by them. The bars are of manganese steel or some other suitable steel, and come in lengths of several feet; they may be cut into sizes the width of a tooth. These are welded on and filled out to size with welding rod. A surface of hard facing applied to the point is proving to be economical in prolonging the life of teeth at some places. Figure 9 shows a typical applicator bar and its application to a tooth with hard facing added. Typical repointers are also shown.

An arc-welding machine is considered by many small-scale mechanical placer operators to be essential equipment for a complete plant.

One manufacturer in Pennsylvania quotes $1,095 for a 1-arc, 200-ampere, variable-voltage, engine-driven, arc welder mounted on skids, and $2,835 for one with a 600-ampere rating. Machines with 200-, 300- and 400-ampere ratings also may be purchased at prices between these limits. The same machines mounted on plain wheels cost $1,155 and $2,935, respectively. The prices are f.o.b. factory and the weights for the wheel-mounted machines are 2,200 and 5,650 pounds, respectively.

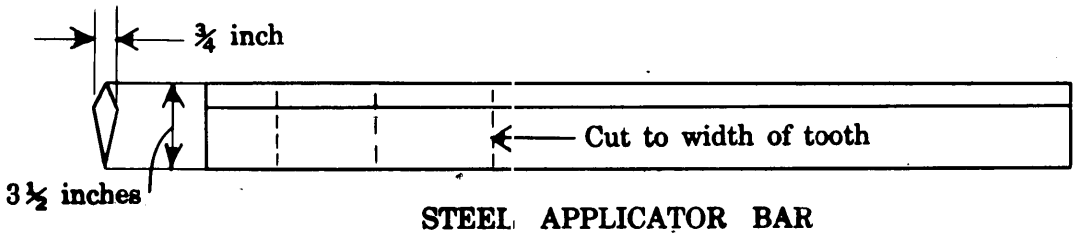

STEEL APPLICATOR BAR

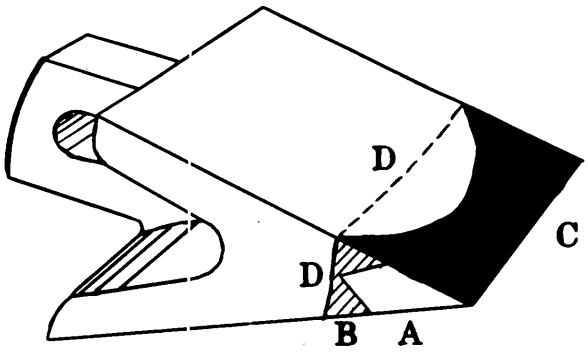

REBUILT TOOTH

A. Steel applicator bar
B. Welding-rod filling
C. Hard face
D. Point before rebuilding

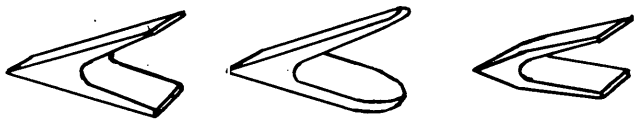

TYPICAL REPOINTS FOR TEETH

Figure 9.—Methods of rebuilding dipper and bucket teeth.

TABLE 9. - Data on rebuilding teeth at typical placer operations.

	Change period, hours	Times rebuilt	Cost per new tooth	Remarks
Fay	32	-	1/ $2.85	Hard faced.
Jasper-Stacey	8 to 24	-	-	Rebuilt.
Clark	8	100	-	-
Consuelo	24	-	2.75	-
Cinco Mineras	8 to 12	6 to 10	8.50	Applicator bars used.
Penn	8	30	7.00	Repoints cost $1.85.
Midland	36	-	-	Applicator bars used.
Pioneer	24	-	-	Rebuilt at central shop.
Sandberg-Carlson	20	3	2.75 7.00	$7 teeth rebuilt more times.
Olson	40 to 50	6	2.75	Adapters cost $8.
Collins	10	Over 15	2/	Rebuilt in town.
Folsom	64	-	-	Repoint every 64 hours, build up and repoint 450 hours.
Prickly Pear	24	2 or 3	-	-
Pantle	100	5 to 7	7.00	-
Von der Hellen	300	0	-	Not rebuilt.
Cooley	48	-	-	Rebuilt.

1/ Cost rebuilding tooth $0.69.
2/ Cost rebuilding tooth $0.45.

Bulldozers

A bulldozer comprising a tractor with caterpillar treads and road blade mounted in front is considered as an indispensable part of the mechanical placer operation. Its chief use is for clearing away trees and brush and leveling ahead of the dragline or shovel. It is used, also, to build roads and dams and occasionally to strip a few feet of barren clay or soil overburden.

The Caterpillar Tractor Co., Peoria, Ill., furnished the following data on various sizes of their tractors suitable for bulldozing; prices (July 1937) are f.o.b. their factory:

Model number	Number cylinders	Approximate draw-bar horsepower	Gage model, inches	Fuel	Approximate weight, pounds	Price
RD 8	6	95	78	Diesel	32,600	$7,325.00
RD 7	4	60	74	do.	20,980	5,300.00
	4	60	60	do.	20,320	5,050.00
RD 6	3	45	74	do.	15,520	3,925.00
	3	45	56	do.	14,860	3,725.00
50	4	50	74	Gasoline	18,890	3,980.00
	4	50	60	do.	18,080	3,730.00
R 5	4	55	74	do.	14,130	3,210.00
	4	55	56	do.	13,320	3,010.00

The same manufacturer furnished the following prices, submitted to them on bulldozers suitable for use on their tractors:

Caterpillar tractor number	La Plante-Choate,1/ Cedar Rapids, Iowa, effective July 20, 1936		Kay-Brunner Steel Products, Inc.,2/ Los Angeles, Calif., effective May 12, 1936		R. G. LeTourneau, Inc.,3/ Peoria, Ill., and Stockton, Calif., effective Jan. 15, 1937	
	Approximate weight, pounds	List price, f.o.b. factory	Approximate weight, pounds	List price, f.o.b. factory	Approximate weight, pounds	List price, f.o.b. factory
RD8	8,520	$1,700	6,750	$1,525	4,634	$1,230
RD7-74	5,545	1,375	5,100	1,360	4,532	1,040
60	5,030	1,260	4,750	1,290	3,557	945
RD6-74	4,920	1,230	3,750	1,150	3,196	945
56	4,550	1,140	3,380	1,100	2,987	850
50-74	5,545	1,375	5,100	1,360	-	-
60	5,030	1,260	4,750	1,290	-	-
R5-74	4,920	1,230	3,750	1,150	-	-
56	4,550	1,140	3,380	1,100	3,987	850

1/ Hydraulic two-way pressure control.
2/ Hydraulic control.
3/ Mechanical control.

POWER

Five principal types of power motors and combinations thereof are common at plants of the small-scale mechanical type - (1) electric power for excavator and washing plant, (2) Diesel engines for both, (3) Diesel shovel and Diesel electric plant, (4) gasoline-powered shovel and plant, and (5) Diesel shovel and electrically powered treatment plant.

The choice of the most economical power plant depends on a number of variables, and each particular case must be decided on its merits. The Bodinson Manufacturing Co., Inc., of San Francisco, Calif., submits the following table showing first costs for various power plants for a mine with a dragline and floating treatment plant and costs after two years of operation.

Comparative cost of power plants, 125-horsepower dragline and 85-horsepower on boat

	Cost of power plant	Operating cost, 2 years	Salvage value at end of 2 years	Net cost at end of 2 years' operation
Direct electric power..	$4,214	$14,790	$1,685	$17,318
Diesel engines, both shovel and boat.....	9,100	7,644	3,480	13,264
Diesel shovel, Diesel electric on boat.....	12,192	6,475	4,800	13,867
Gasoline engines, both shovel and boat.....	2,900	23,275	1,000	25,175
Diesel shovel, electric power purchased for boat.....	7,912	12,950	2,240	18,622

This table indicates that Diesel power is most economical, although it shows little advantage in economy over the Diesel shovel and Diesel electric plant. The latter has advantages owing to the convenience of electrical drives and elimination of transmission machinery. Most recently purchased excavators and boats are Diesel-powered. Gasoline seldom is used except on the older excavators. Generally, Diesel power has an advantage over electricity, due to the isolation and wide extent of placer deposits. The initial cost of constructing power lines and installing transformers to serve equipment that is used on deposits having a life of sometimes a year or less is prohibitive. Part of the line and transformers must be moved continually to keep up with advancing operations; long trailer cables that are maintained from transformer to equipment demand attention. Electrically-powered and controlled excavators ordinarily give smoother operation and more positive control than Diesel power; however, the modern Diesel engine is being improved rapidly. Considering all factors, Diesel power is more economical than electricity or gasoline for the average placer mine of the type considered in this circular.

Fuel and power consumption per cubic yard for shovels and draglines has a wide range. Variations on excavators of the same size and type are due mostly to physical conditions in the gravel and to the relative experience of operators rather than to the efficiency of power units of the same degree of repair.

The following quotations, effective April 1, 1935, for Diesel and gasoline-power units suitable for use on washing plants were submitted by Caterpillar Tractor Co., Peoria, Ill.

Diesel and gasoline caterpillar power units

Model	Number cylinders	Fuel	Brake horsepower		Approximate shipping weight, pounds 1/	Price, f.o.b. factory 1/
			Maximum	Continuous sustained load		
D 13,000	6	Diesel.	125	95	8,430	$3,950
D 11,000	6	do.	102	76	8,510	3,600
D 8,800	4	do.	77	59	6,310	2,737
D 7,700	4	do.	63	48	6,220	2,487
D 6,100	3	do.	47	36	5,632	2,023
9,500 G	4	Gasoline.	96	81	6,960	1,608
6,500 G	4	do.	51	43	3,660	1,020

1/ Includes engine complete, plus base, pillow blocks, clutch, controls, crank, hood, radiator, and fuel tank.

The following table contains an incomplete list of Diesel electric generator sets submitted by Caterpillar Tractor Co., Peoria, Ill. The price was in effect April 1, 1935, and probably is a little higher now (1937), since metal and machinery prices have gone up since that time. Prices are f.o.b. factory.

Caterpillar Diesel electric generator set price list

Alternating current

Volts	D 13,000 - 60 kw.				D 8,800 - 40 kw.				D 6,100 - 25 kw.			
	Diesel side	Electrical side	Total List price	Total Approx. weight	Diesel side	Electrical side	Total List price	Total Approx. weight	Diesel side	Electrical side	Total List price	Total Approx. weight
3-phase, 60-cycle, 900 r.p.m:												
120	$4,142	$1,425	$5,567	11,884	$2,968	$1,269	$4,237	9,788	$2,210	$1,022	$3,232	7,930
240	4,142	1,374	5,516	11,884	2,968	1,224	4,192	9,788	2,210	988	3,198	7,930
480	4,142	1,374	5,516	11,884	2,968	1,224	4,192	9,788	2,210	1,007	3,217	8,430
3-phase, 60-cycle, 750 r.p.m:												
120	4,142	1,755	5,897	12,721	2,968	1,489	4,457	10,238	2,202	1,181	3,383	8,470
240	4,142	1,696	5,838	12,721	2,968	1,438	4,406	10,238	2,202	1,143	3,345	8,470
480	4,142	1,696	5,838	12,721	2,968	1,438	4,406	10,238	2,202	1,166	3,368	8,470

Direct current

2-wire, 900 r.p.m.												
125	4,169	1,658	5,827	12,242	2,966	1,216	4,182	9,381	2,210	881	3,091	7,660
250	4,169	1,505	5,674	12,242	2,966	1,157	4,123	9,381	2,210	881	3,091	7,660
600	4,169	1,581	5,750	12,242	2,966	1,217	4,183	9,381	2,210	926	3,136	7,660
3-wire, 900 r.p.m:												
125 or 250	4,169	1,716	5,885	12,242	2,966	1,326	4,292	9,381	2,210	1,037	3,247	7,860

WATER

Water is used primarily for disintegrating and washing the gravel and flushing it through the sluices. In addition, a relatively large amount is used to maintain a pond for the floating plants. Small additional amounts are used during a clean-up.

Disintegration and washing usually start by spraying water onto the gravel in the hopper. Further washing is done with a spray pipe with holes drilled inside and running the entire length of the trommel, or by sprays that shoot into the lower end of the screen. Occasionally, a small amount of water is added in the sluices to prevent choking. From 700 to 1,800 gallons of water per cubic yard was used on the floating plants for washing the gravel and running it through the sluices; a boat with jigs in addition to sluices used 2,500 gallons per cubic yard. The range on movable and stationary land plants was 450 to 2,000 gallons per cubic yard where trommels were used for washing. At one plant (Rhyolite), where the tailings were thickened, 150 gallons of new water was used per cubic yard. At the Jett-Ross mine, where the gravel was not screened, 3,200 gallons per cubic yard was used.

The amount of water required to wash a cubic yard of gravel is governed mainly by the amount of clay and relative coarseness of the gravel. Gravel containing little or no clay and a large amount of oversize can be washed with a minimum of water (the oversize is handled mechanically); a large amount of clay in fine sandy gravels will require up to three times the amount. Usually, about 700 or 800 gallons per cubic yard and not over 1,000 gallons per cubic yard is sufficient for washing in average gravel. Some of the plants discussed were not using enough water, often from necessity, and others undoubtedly were using too much. An insufficient supply with a muddy return causes the density of the pulp to be too high, which prevents some fine gold from settling down into the riffles. Too great a supply of water causes the riffles to run naked at times, thereby causing some of the settled gold to be boiled out the riffles and carried away with the tailing. At the best managed plants the water supply to the sluices is cut off immediately whenever the feed of gravel is interrupted.

The amount of water required to maintain a pond sufficient for a floating washer depends upon the relative porosity of the gravel and bedrock. The minimum requirements appear to be about 35 to 50 miners' inches, although 20 miners' inches were used at one small plant working in tight gravel and with a limited water supply; 100 to 150 miners' inches was found to be used at a few operations, owing mostly to the abundance of water.

The best practice for floating plants of about 100 cubic yards per hour capacity appears to be to use an 8-inch centrifugal pump to circulate the wash water and a 3- or 4-inch auxiliary pump for cleaning up. Water usually is supplied by the 8-inch pump working against about a 40-foot pressure head and consuming 25 to 30 horsepower. A 3- or 4-inch pump will require about 5 to 10 horsepower.

TABLE 10. - Cost of plants and operating costs at placer mines using floating treatment plants

	Cost of plant				Operating cost per cubic yard				
	Excavator	Boat	Miscellaneous	Total	Excavation	Washing	General	Miscellaneous	Total
Lynx Creek.....	-	-	-	-	-	-	-	-	1/0.10
Fay.....	$18,500	$10,000	$9,000	$37,500	-	-	-	-	2/.11
Consuelo.....	28,500	10,100	8,400	47,000	-	-	-	-	3/.12
Richter.....	8,000	15,000	4,000	4/27,000	-	-	-	-	5/.12
Cinco Mineros...	22,500	12,000	-	34,500	$ 0.04	$0.056	$0.015	-	6/.111
Penn.....	39,600	16,000	7/44,400	100,000	.0332	.0374	.0032	$0.0179	.115
England.....	18,000	12,000	10,000	40,000	.0332	.0374	.0198	.0183	8/.1087
Midland.....	-	15,000	-	40,000	-	-	-	-	.15
Gold Acres.....	-	-	-	-	-	-	-	-	9/.10
Pioneer 1.....	22,000	-	-	-	-	-	-	-	10/.09
Pioneer 2.....	22,000	-	-	-	-	-	-	-	10/.09
Pioneer 3.....	30,000	21,000	9,000	60,000	-	-	-	-	11/.09
Carlson-Sandburg	-	-	-	-	.03	.03	.03	-	10/.09
Olson.....	21,000	14,000	8,600	43,600	-	-	-	-	10/.09
Collins.....	20,270	22,800	10,600	52,800	-	-	-	-	10/.11
Folsom.....	-	10,000	-	-	.0275	.0275	-	-	12/.055
Lilly.....	-	-	-	50,000	.04	.05	.01	-	12/.10
Schwegler.....	18,500	16,400	3,600	38,500	-	-	-	-	.125
Cooley.....	-	-	-	-	-	-	-	-	13/.18
Fairplay.....	-	-	-	-	-	-	-	-	.25
Prickly Pear....	-	-	-	-	.15	.15	-	-	14/.30

1/ Includes direct, general, and depreciation; labor $0.05, power $0.02, other costs, $0.03; excludes royalties.
2/ Cost for 1936 includes depreciation but does not include owner's time as superintendent or royalties.
3/ Includes depreciation over a 4-year period but not owner's wages as superintendent or interest on the investment.
4/ Excludes wages of owner and two sons who constructed the plant.
5/ Excludes wages of owner and two sons.
6/ Does not include depreciation of equipment.
7/ Includes $5,500 for a bulldozer and two light dragline shovels that would not dig the gravel.
8/ Does not include depreciation; costs cover a period from April 5, 1935, to Jan. 1, 1936.
9/ Excludes royalty and depreciation; includes clearing.
10/ Includes depreciation but not royalties.
11/ Based on handling 4,000 cubic yards per day and including depreciation.
12/ Owner's wages not included.
13/ Estimate for first 6 weeks' operation and includes preliminary non-recurring expenses.
14/ Includes 5 to 7 cents depreciation.

TABLE 11. - Costs of plants and operating costs at placer mines using movable or stationary treatment plants

	Cost of plants				Cost of operation					
	Excavators	Washing and gold saving plant	Miscellaneous	Total	Labor	Supervision	Power	Supplies	General	Total
Movable land plants:										
Skeels	-	-	-	-	$0.047	$0.016	-	-	-	1/$0.16
Pantle	-	$12,000	-	-	-	-	-	-	-	1,2/.08
Pan-Due	-	-	-	-	-	-	-	-	-	1/ .20
Fairplay	-	-	-	-	.20	-	-	$0.16	3/$0.10	.46
Blackhawk	-	-	-	-	-	-	-	-	-	4/ .25
Humphreys, Clear Creek	$66,200	70,000	$11,000	$147,200	-	-	-	-	-	5/ .25 — See
Dixie	-	-	-	-	.028	.004	.014	.018	.011	6/ .075
Humphreys, Virginia City	67,890	170,000	26,905	264,795	.0442	.0114	$0.0194	.0374	.0059	1/ .1183
Eldorado	-	-	-	-	-	-	-	-	-	.11
Hallett	-	7/15,180	7/9,300	-	-	-	-	-	-	1/ .25
Jett-Ross	14,450	4,500	8,050	27,000	-	-	-	-	-	1/ .085
Fisher	14,000	10,150	3,050	27,200	.036	.009	.018	.027	.029	8/ .119
Stationary plants:										
Ash Canyon	-	-	-	-	-	-	-	-	-	2/.13,9/.70
Chittendon	-	-	-	-	-	-	-	-	-	10/.15
Von der Hellen	-	-	-	-	.13	.02	.07	.11	.02	1,11/.35
Guerin	-	-	-	12/2,500	-	-	-	-	-	1,12/.25
Wallace	-	-	-	-	-	-	-	-	-	13/ .13
La Grange	-	-	-	30,000	.046	.020	.024	.020	.052	8/ .16
Rhyolite	-	-	-	-	.25	-	14/.15	.08	15/.28	16/.76

1/ Exclusive of depreciation and royalties. 2/ Based on total yardage dug. 3/ Repairs. 4/ When running at 40 percent of time. 5/ Before depletion. 6/ Excludes income tax, depreciation, and royalties; based on total yardage dug. 7/ 1932. 8/ After depreciation. 9/ Based on yardage washed. 10/ Exclusive of the two owners' time, major repairs, tire wear, and depreciation. 11/ Estimated. 12/ Exclusive of wages of the two owners. 13/ Includes excavation $0.025, transportation $0.02, washing $0.025, tailing disposal $0.02, general $0.01, and indirect $0.03; exclusive of royalties. 14/ Gasoline. 15/ Rental of plant including royalties $1,000 month. 16/ Includes stripping.

6429

Bodinson Manufacturing Co., Inc., submits a price of $14,000 at the factory to cover the equipment for a floating boat plant having a capacity of 120 to 125 cubic yards per hour for use with a 1- to 1-1/4-cubic-yard dragline. The washing plant comprises a 10- by 10-foot hopper, 54-inch by 26-foot trommel screen, 700 square feet of riffle table, an 8-inch centrifugal pump, and a 30-inch by 50-foot stacker conveyor. Power is furnished by a 65-horsepower Diesel engine not included in estimate. The equipment is on a sectionalized steel frame mounted on a hull. To the factory price must be added the cost of transportation to the site, engine, hull and housing, and erection; a recent plant of this type was erected in Nevada in 1937, ready to run, at a cost of $20,000.

The following major items are typical of costs for a plant of this kind.

Hopper	$750
Trommel with running gear	2,400
Pump	750
Piping	600
Riffle tables and stream-downs	800
Riffles	750
Stacker	1,800
Transmission (engine to trommel, stacker, and pump)	1,300
Splash housing, Saveall chutes, etc.	425
Winches, rigging, and cable	500
Steel frame	2,500
Miscellaneous items	1,425
Total	14,000

In addition to the above items, an engine, lighting plant, hull, and engine housing will be required.

The cost of power plants is given in the section on Power.

The following table gives sizes and costs for washing plants of larger sizes:

Cost of floating washing plants

Size of dragline bucket, cubic yards	Size of hull, feet	Size of trommel, feet	Rated capacity per day, cubic yards	Approximate cost of washing plant	Cost of hull	
					Wood	Steel
1-1/2 to 1-3/4	34 by 40	4-1/2 by 28	3,000	$15,500	$1,600	$3,200
1-3/4 to 2	36 by 42	4-1/2 or 5 by 31	4,000	19,000	1,800	4,000
2 to 3	36 by 42	5 by 31	5,000	22,500	1,850	4,100

Costs of stationary and small movable plants are largely lacking. Several of the larger movable plants have been rebuilt several times; new plants of the same design could be built at less cost. The use of salvaged material and equipment moved from other operations and lack of standardization in the present plants do not permit a useful general discussion of the costs of movable and stationary plants.

Gardner and Johnson[16] give costs of shovels and draglines suitable for placer mining.

The following tabulation is a summary of prices furnished by the Bucyrus-Erie Co. in 1932:

Bucket, size cubic yards	Boom, length feet	Possible capacity 8-hour shift, cubic yards	Cost, including bucket, f.o.b. factory
1/2	35	344	$6,200
3/4	35	464	9,300
1	45	556	11,000
1-1/2	30	864	13,700
2	45	1,152	17,250
2-1/2	50	1,280	29,300
3	85	1,440	48,400

The Marion Company quoted the following prices:

Size of dipper, cubic yards	Hourly capacity, cubic yards	Cost, f.o.b. factory
3/4	40 - 120	$10,250
1	45 - 140	12,000
1-1/4	50 - 160	13,500
1-1/2	60 - 175	16,000

Cost of mining

Table 10 gives costs of mining per cubic yard at placer mines where floating washers are used, and table 11 gives those for portable land and stationary plants. The costs are based upon estimated yardages, since actual measurements rarely are made.

The unit cost at placers using floating washers, excluding the Prickly Pear, Fairplay, and Folsom, range from 9 to 15 cents per cubic yard. When all costs except royalties are included, 12 cents probably would be about average. Royalties usually are 10 or 15 percent of the recovered gold.

16/ Work cited, Part 3, pp. 27-28. (See footnote 5.)

The unit cost of mining, where movable land plants are used, ranges between wide limits. Those at the larger operations compare favorably with costs where floating washers are used. Costs at others are from two to four times greater. High cost at some of the placer mines probably can be attributed to inefficient equipment, which makes it difficult to handle the rated amount of gravel.

The cost of mining and washing gravel in stationary plants cannot be predetermined from present experience with any degree of accuracy.

SUMMARY

Dragline and power-shovel placer mining is becoming increasingly important; a substantial part of the placer gold produced is now being obtained by this type of mining. The technique of mining and the mechanical efficiency of washing plants are being improved steadily. The floating washing plant has reached a state of development where reasonably sustained operation can be expected. Although much remains to be done in the standardization of movable land and stationary plants, marked progress has been made within the past 2 or 3 years.

Experienced operators with the right equipment have successfully worked deposits at which other companies previously failed. The type of washing plant, in particular, must be selected to fit conditions on the ground in order to operate successfully.

Present mining costs at some of the dragline placer mines would not have been thought possible a few years ago.

AFTER THIS REPORT HAS SERVED YOUR PURPOSE AND IF YOU HAVE NO FURTHER NEED FOR IT, PLEASE RETURN IT TO THE BUREAU OF MINES. THE USE OF THIS MAILING LABEL TO DO SO WILL BE OFFICIAL BUSINESS AND NO POSTAGE STAMPS WILL BE REQUIRED.

UNITED STATES
DEPARTMENT OF THE INTERIOR
BUREAU OF MINES

OFFICIAL BUSINESS

RETURN PENALTY LABEL

THIS LABEL MAY BE USED ONLY FOR RETURNING OFFICIAL PUBLICATIONS. THE ADDRESS MUST NOT BE CHANGED

PENALTY FOR PRIVATE USE TO AVOID PAYMENT OF POSTAGE, $300

BUREAU OF MINES,

WASHINGTON, D. C.

September 25th.1952.

KEENAN PROPERTIES PLACER OPERATIONS.

During the past four years of investigation and exploration, the methods and costs of a placer gravel operation in Bear Creek, Potato Creek, and other streams controlled by Keenan Properties have been studied with the aid of the J.V.N. Dorr Co., Bureau of Mines Records, Earl R.Amundson, Consulting Engineer, W.C. Driskill, Engineer, and other experienced placer engineers. In addition, a Pilot Plant operation and testing during two consecutive years enabled Keenan Properties to formulate plans for production particularly applicable to the area concerned.

It has been established by several years testing that the Bear and Potato Creek placer gravels contain values not less than $1.25 per cubic yard, and there is every indication that the values will average $1.54 per cubic yard. This is exclusive of current bonus prices.

The economic recovery of the values in Tin, Columbite-Tantalite, Tungsten and Gold contained in these placers, by established and proven methods presents no obstacle or difficulty. A considerable amount of data on successful operations closely paralleling Keenan Properties placers is available through the Bureau of Mines Publications, Mining and Metallurgy, Engineering and Mining Journal, Mining World, recognized Text Books, and from experienced Placer Engineers.

Recent advances in mining technology and the development of specialized mining equipment has made possible profitable recoveries from placers previously considered questionable. In the Bureau of Mines Information Circular 7013, 1938, by E.D. Gardner and Paul T. Allsman, on page 68, it is stated " Present mining costs at some of the dragline placer mines would not have been thought possible a few years ago."

Attention is particularly directed to the attached September 1952 Mining World, and article (pages 44-47) on Columbium, now being recovered from Nigerian alluvial deposits. There is a definite parallel and unusual similarity in the Nigerian deposits described, and the Keenan Properties deposits in which Cb-Ta is found in conjunction with tin. The Nigerian deposits are described as containing 0.88 pounds tin per cubic yard, and columbite "in amounts as high as 0.02%." Keenan Properties deposits contain 0.628 pounds of tin per cubic yard minimum; 0.23% columbite; 0.10% tantalite; 0.07% tungsten, and in addition, approximately 60¢ per cubic yard in gold. Separation of the tin, columbite and tantalite in the Nigerian concentrates is an accomplished fact. As early as 1937, separation of tin, columbite-tantalite and tungsten concentrates recovered from a small area of what is now Keenan Properties Placer gravels was accomplished, (see attached separation data, Fansteel Metallurgical Corp.)

Para.2, column 2 of the above article shows that columbite occurs in "proportions up to 4.0% of the amount of tin." In Keenan Properties deposits, columbite occurs in proportions up to and in excess of 4.0% of the amount of tin. In no instance on Keenan Properties placers will 70 feet of barren overburden have to be removed as in the Nigerian operations,(see cut, page 46, column 1.)

Operating without the benefit of modern equipment and high prices supported by Government bonuses, a number of successful dragline-fed portable washing plants are reported by the Bureau of Mines. These are primarily recovering gold only, without supporting values as contained in Keenan Properties deposits. For example: the attached Information Circular 6961 "Placer Operations of Humphries Gold Corporation, Clear Creek, Colorado." (see page 2, paral, Introduction,) describing an operation similar to that planned by Keenan Properties, treating 3000 cu.yards per day, at a cost of 20¢ per cu.yd, using about 1500 gallons water per minute. (According to the Bureau of Labor Statistics and Costs, the increase since 1936 is 96.7%) Today, this operation cost would therefore be 39¢ per cubic yard. Other operations referred to would have comparable increases in costs.

E.D. Gardner and Paul T. Allsman, in Information Circular 7013, May 1938, "Power Shovel and Dragline Placer Mining," para 2, page 2, Introduction, refer to "considerable advance in techniques, new installations, and the substantial number of plants now being operated successfully." See also page 24, Movable Land Plants; page 37, Table 8, Wash Water; page 64 Table 10, Costs; page 49, Costs; page 59 para 3; page 68, Costs and Summary. Several other dragline operations are referred to in Peele, Vol.I, 10-604,5,6.

Attached, see Keenan Properties Outline of Bear Creek Placer Operation showing water use.

With reference to Taggart's Handbook of Mineral Dressing, p.2-221, "Only important domestic production (Tantalum-Columbium) is from the Black Hills, S.D. Output of concentrates was 8 tons in 1937, 18 tons 1938, 340 lbs. 1939, and in two years of former activity 28.5 tons of concentrate ranging from 38.7 to 57% Ta_2O_5.

It is known that of the total concentrates above, produced by Fansteel Metallurgical Corp. during their operation, approximately 12,000 lbs of this concentrates was recovered from a small area of what is now part of Keenan Properties placer gravels.

Separation Data on Tantalum-Columbium Concentrates
by Fansteel Metallurgical Co. 1937.

The first separation gave 3 products, as follows, from 11,072 lbs.

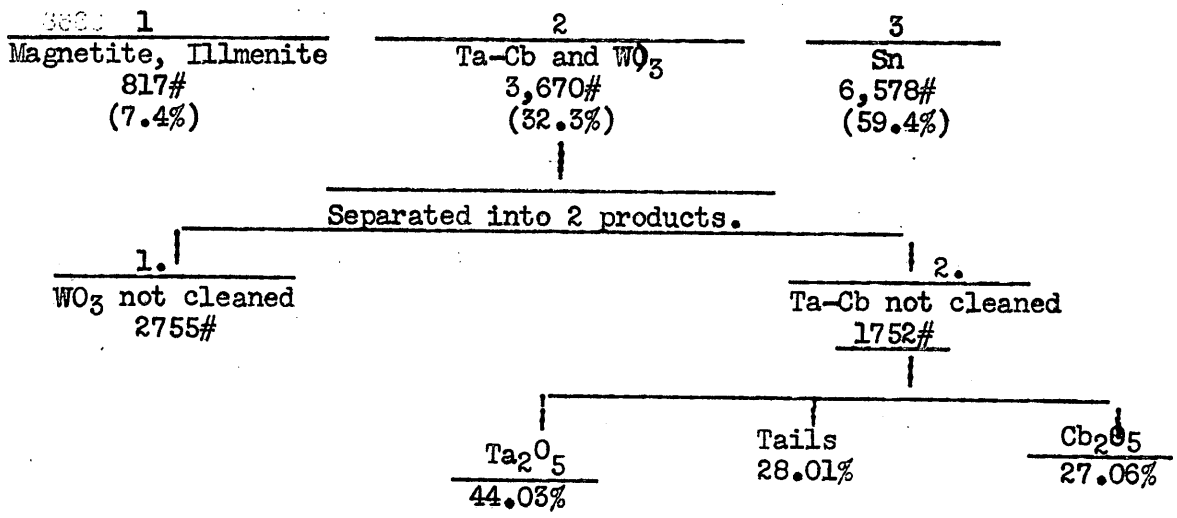

K E E N A N P R O P E R T I E S.

OUTLINE OF BEAR CREEK PLACER OPERATION.

Showing
WATER USE.

TREATING 125 CUBIC YARDS PER HOUR. OPERATING 20 HOURS PER DAY.
(Allowing for 20% shutfown time.)

1. SPRING STREAM FLOW: April through mid-July, plus 1000 gallons water per minute minimum average.

2. DAM #1. 2,800,000 cubic feet capacity, at Two Bit Gulch.
   DAM #2. 2,500,000 " " " at Conner's Rock.

3. OPERATION STARTS at Trench #1, (1951 Phase 1, test area.) 2000 feet below Dam #2, and 6000 feet below Dam #1. Water supplied by Sand Pump at zero head.

4. OPERATION: a. Movable Washing Plant, Trommel, Pan American Rougher Jigs, etc. Rougher concentrate delivered to
   b. Semi-Movable Cleaning Plant, Pulsator jigs as cleaners, amalgamator, scavenger jig, table etc. Amalgam sponge and clean concentrate delivered to Mill.

5. WATER. Washing Plant:

   a. From Dam #2, 1000 gallons per minute fresh water to washing plant circuit, distributed as follows: 680 g.p.m to trommel, 320 g.p.m to rougher jigs (4 cells @ 80 g.p.m per cell, having a capacity of 25-30 cu.yd. gravel per hour per cell) /1.

   b. Dewatering screws deliver feed from trommel to jigs, diluted 4-6:1 and overflow water from dewatering screws is returned to trommel sprays as required for efficiency.* Overflow from rougher jigs recirculated through the hopper at approx. 200 g.p.m. Total wash water in circulation 1800 g.p.m (1000 g.p.m new water, 600 g.p.m from dewatering screws, 200 g.p.m from jig circuit.)

   c. Total wash water per cubic yard of gravel, approx. 870 /2. gallons. Overflow from plant is carried by drainage ditch to cleaning plant settling pond.

   d. Allowing for 20% loss for contingency and shutdown time, operation at 1000 g.p.m new water for 16 hours uses 960,000 gallons per day. At flow of 1000 g.p.m for 24 hours, dam receives 1,440,000 gals water, and overflow is diverted to cleaning plant pond.

   e. From the above, (1000 g.p.m new water, or 87 miner's inches /3) for treating 2000 cu.yds gravel per day, the water duty is 22.7 cu.yd. gravel washed per miners inch new water supplied. /4.

/1. See Taggart, Mineral Dressing, 11-25,26. Pan American Placer Jigs.

* During high water level in Spring, new water may be used instead of returning water from overflow of dewatering screws.

/2. See I.C. 7013 para 3, page 59. Water per c.yd.

/3. Based on calculations using 1.5 cu.ft. per minute equals 1 miner's inch.

/4. See Mining & Metallurgy, October, 1936, pp 467-70 and attached photostats.

6. WATER. Cleaning Plant:

Note:- Rougher concentrate recovery total per 20 hour day, approximately 20,000 pounds maximum.

/5. This water may be excessively dirty, see Taggrt, 11-30.

a. Water requirements for 2 cell, 12x12 Pan American Pulsator jig as cleaner, is approx. 12 g.p.m per cell, or 24-32 g.p.m for 2 cells. /5. The weight of clean concentrate product at this stage is approximately 6000 pounds.

b. Water requirement for scavenger jig (1 cell 12x12) is approx. 12.g.p.m.

/6. See Taggart, 11-30,31, Wate consumption.

c. Water requirement for cleaner concentrating table is approx. 25 g.p.m /6.

d. Water requirement for amalgamator and misc. feeders etc. approximately 70 g.p.m maximum.

e. Total requirement for cleaning plant, 150 g.p.m maximum during short,(approx.2 hour) operation. Water obtained from small settling pond, receiving used water from the Washing Plant and new water from overflow drainage.

&
/7. See Taggart 11-30,31.

f. The Pulsator jig capacity per hour is in excess of daily production from rougher jigs. /7. The 3 shift, 20 hour operation of the washing plant leaves 4 free hours for the operating crew to service. Part of this crew will operate the cleaning plant during this period.

7. SUMMER STREAM FLOW: August through September, exclusive of any rainfall, is at a minimum 300 g.p.m (26.7 miner's inches) or 432,000 gallons per 24 hours.

a. Total requirements for washing plant, (see para 5.d.above) is estimated at 960,000 gallons water per day.

b. Water loss per day, approx. 528,000 gallons, (960,000 less 432,000).

c. Dams #1 and 2, at a total of 5,300,000 cu.ft. plus, hold a total of approximately 39,644 gallons of water. At a loss of 528,000 gallons per day, fresh water supply is enough for 75 days, exclusive of evaporation, or addition of new supply.

d. Stream flow in October returns to approximately 1000 g.p.m.

Fig. 1. Dragline placer plant at Virginia City, Mont., as operated in the summer of 1935.

Dragline Installation for Recovering Gold at Virginia City, Mont.

By Arthur V. Corry
Mining Engineer, Butte, Mont.;
Member, A.I.M.E.

GOLD was discovered in Alder Gulch, Virginia City, Mont., on May 26, 1863. In a short time some 6000 people flocked to the new discovery, and on the banks of Alder Gulch six settlements sprang into existence, the principal one, Virginia City, alone surviving. This town today has a population of 800, and is the county seat of Madison County. It is estimated that between forty and fifty million dollars in gold was produced up to 1904.

Virginia City is situated at the mouth of Alder Creek where that stream leaves the narrow canyon that cuts the steep foothills flanking Old Baldy Mountain, elevation 9572 ft., 12 mi. south. Virginia City itself is 5700 ft. above sea level.

The country rock along Alder Gulch consists of schist and gneiss, here and there broken by outcrops of limestone and quartz schists. It is probable that 1500 ft. of erosion has taken place in this region. Throughout the area occur numerous quartz veins carrying gold and silver, from which, no doubt, the placer gold was derived. In recent geological times a basalt flow covered the area, remnants now being found capping some of the hills near by. In the lower reaches of Alder Gulch occur several layers of volcanic ash transported from the drainage area adjacent. This volcanic ash forms a false bedrock upon which the auriferous gravels rest. As one approaches Virginia City, the bedrock consists of the schist and gneiss of the bordering hills. Average depth to bedrock is 18 ft.

The fineness of Alder Gulch gold is 850, and the grains range in size from fine (0.2 mg.) to medium (2 mg.), with occasional small nuggets 10 to 50 mg. in weight.

In its history, Alder Gulch has been the proving grounds of practically every conceivable gold-saving device. The major production was made with hydraulic giants. However, drift mining afforded a large output in the early-day operation. The grade of the gulch was so gentle that great difficulty was experienced in disposing of the tailing. This often necessitated operating by parallel bedrock drains, with hand shoveling of the coarser tailing to areas between the drains. Subsequently, hydraulic elevators were tried. Then followed a trial of an orange-peel excavator. Several efforts —all unsuccessful—were made with bucket-shovel plants.

In 1896 the first dredge was installed below the mouth of Alder Gulch, and proved successful. This was the forerunner of several dredges, each successive machine improving upon its predecessor in capacity, re-

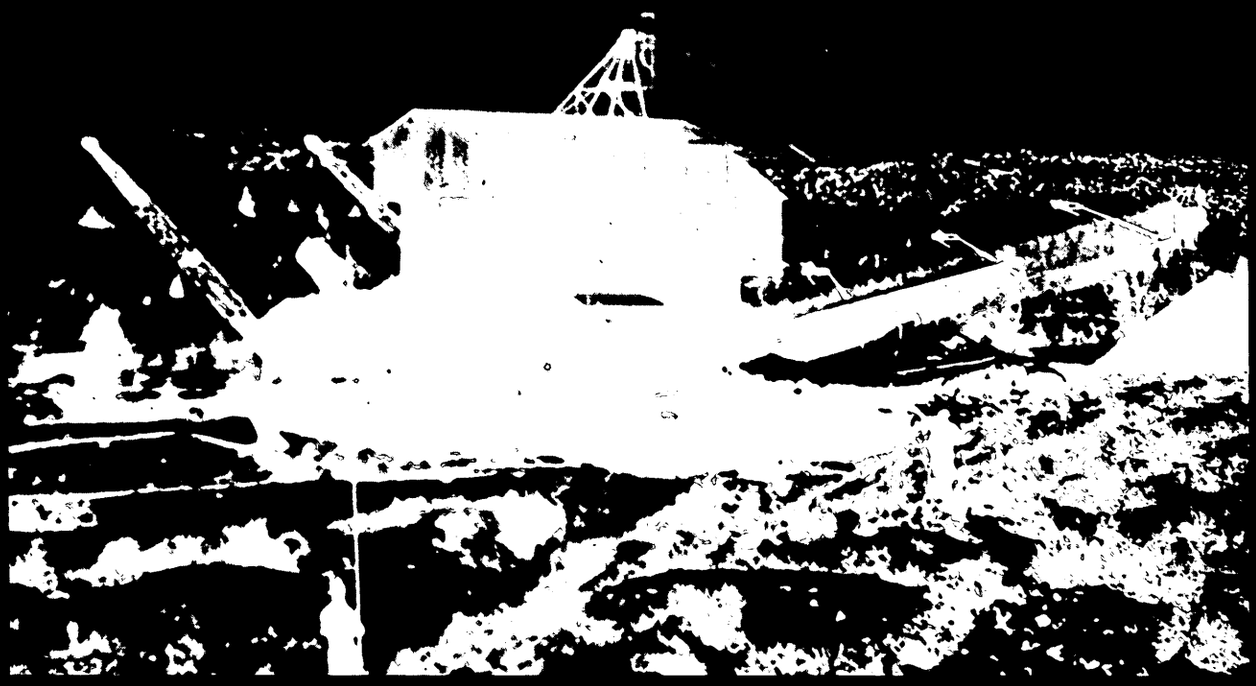

Fig. 2. Dragline plant completely housed for winter operation, January, 1936.

covery, and cost, reaching a climax in 1911 with the Conrey No. 4 boat. This dredge handled 400,000 cu. yd. of gravel per month and was capable of digging to a depth of 55 ft. below water level, at an operating cost of less than 3c. per cu. yd. The Conrey Placer Mining Co. mined all the gravel on their holdings and ceased operations in 1922, since which time the gulch had been inactive.

Two factors have been responsible for the rejuvenescence of placer mining: the increase in price of gold, and the advances made in the mechanical efficiency of excavating appliances. Especially is this true with respect to the adaptation of dragline equipment to placer operation. The first departure from ancient methods of placer mining was made by a placer miner in New Zealand in 1870 when that resourceful individual made use of a steam dredge to mine submerged beach sand in that section for its gold. The gravel was delivered to an auxiliary floating washing plant near by. With modifications, this mechanical setup is in general use today.

The first successful application on a commercial scale to placer mining of the principles involved in handling gravel, as perfected by large-scale dirt-moving contractors, was in Colorado in 1932. In this operation, near Golden, installed by the Humphreys Gold Corp., two draglines each of 1¼ cu. yd. capacity, assisted by a 1-cu.yd. gasoline gathering shovel in the pit, deliver placer gravel into the hopper of a screening and washing plant, placed on caterpillar treads. Upon screening and washing, the oversize is discharged to the rear by a tailing stacker. The undersize is conveyed through a pipe to the sluicing plant, also mounted on caterpillar treads some distance away, which discharges its tailing into the excavated area. This Colorado plant handles approximately 40,000 cu. yd. per month at a cost of 25c. per cu. yd.

This type of mechanical setup is suitable for placer operations under certain conditions where other appliances fail. Where cross dikes traverse the gravel deposit, or large boulders occur, or where the bedrock is crumbly, deeply fissured, channeled, or irregular, a dragline installation offers the only solution. With this method, bedrock is in full view, and any values occurring in potholes or crevices may be easily recovered. The washing plant, which travels on caterpillar treads under its own power, may be either on the surface or in the pit. In the accompanying view showing summer operations, Fig. 1, the entire washing-sluicing plant is traveling on bedrock in the pit, the two draglines being on the surface. In Fig. 2, the entire plant, with the draglines, is traveling on the surface.

In June and July, 1935, the corporation mentioned installed the first dry-land dredge in Montana, at Alder Gulch, to rework the placer mining tailing of that famous gulch. Figs. 1 and 2 show this installation—the first as operated in the summer, and the second with the plant completely housed for winter operation when long continued cold spells of —20° to —40° obtain.

This dry-land dredge is essentially a combination shovel and dragline plant having self-propelled excavating machinery in connection with suitable gold-saving equipment. In addition to the excavating machines,

the plant consists of screening, washing, and gold-saving apparatus, with tailing stacker. These are mounted as a unit on self-propelled caterpillar treads which travel either on the surface of the ground, or in the bottom of the pit on bedrock.

The installation consists of two type K-48 2½-cu.yd. draglines with 50-ft. booms. Assisting the draglines, a 1¾-cu.yd. shovel is used in the pit to excavate gravel from inaccessible banks and place it within reach of the dragline. By the use of this shovel in the pit, the width of each mining sluice is increased to 200 ft.

The draglines are placed ahead of the main plant either in the pit or on the surface of the ground one on either side. These excavate and deliver the gravel from the pit into a 20-cu.yd. hopper on the plant. The hopper bottom is a pan feeder having a capacity of 130 to 360 cu.yd. per hr.

This discharges upon a 48-in. traveling belt made of manganese steel plates, which feeds on to a trommel 7 ft. in diameter by 24 ft. long, pierced with 1⅛-in. round holes. A header spray, using 1500 g.p.m. of water washes the gravel at its entrance. At the mid-point of the trommel, another spray, using 1500 g.p.m. of water returned from the overflow of the dewatering screws, and an additional spray of 1200 g.p.m. of fresh water completes the washing. The oversize material discharges direct upon the 48-in. belt conveyor of the stacker. The undersize from the trommel goes to sump A, where it is elevated by a 12-in. pump, having a maximum capacity of 1200 g.p.m., to the gravel division box. This box distributes the feed evenly to the twelve sluices, 14 in. wide by 53 ft. long, capable of grade adjustment. These sluices are fitted with 14 by 14-in. steel Hungarian riffles. They discharge into four return sluices, each 29 in. wide by 20 ft. long, similarly equipped with steel riffles.

Gravel from the return sluices discharges into twin dewatering screws, 24 in. by 19.3 ft. long, at 30 r.p.m. Solids from the screws discharge upon the tailing stacker belt, and the fines overflowing are pumped to a settling pond in the rear. Depending upon the character of original feed, the discharge from the dewatering screws may reach 90 per cent of the feed.

The stacker is driven from the feed end. It is 120 ft. long, with its elevation adjustable by means of a 7½-hp. hoist. The stacker belt is a 48-in. L.B. Faultless, on self-aligning idlers, with a catwalk on each side. For operation during the winter, the plant is heated by an oil-burning hot-air furnace, the heat being distributed through 8-in. conduits. Hauck kerosene torch units heat the caterpillar treads and frame.

Electric power is obtained from the Montana Power Co. Power requirements are given in Table 1. The entire plant was built by the Link-Belt Co., of Chicago and San Francisco.

TABLE 1. POWER REQUIREMENTS

	Horsepower
Two K-48 Link-Belt draglines, 100 hp. each	200
One K-48 1¾-cu. yd. shovel	100
No. 1 pump, 12 in. to riffle sluice head	200
No. 2 pump, 10-in. slime pump	100
No. 3 pump, 10-in. header pump	40
One fresh-water pump, 1200 g.p.m.	30
Two priming pumps, 10 hp. each	20
One cleanup pump	5
Pan feeder	25
Trommel screen	40
Stacker belt	50
Dewatering screws	75
Boom hoist	7½
Sluice hoist	7½
Front caterpillar drive, two 40 hp. each	80
Rear caterpillar drive, one	50
Total maximum operating demand	700

The total yardage of gravel treated

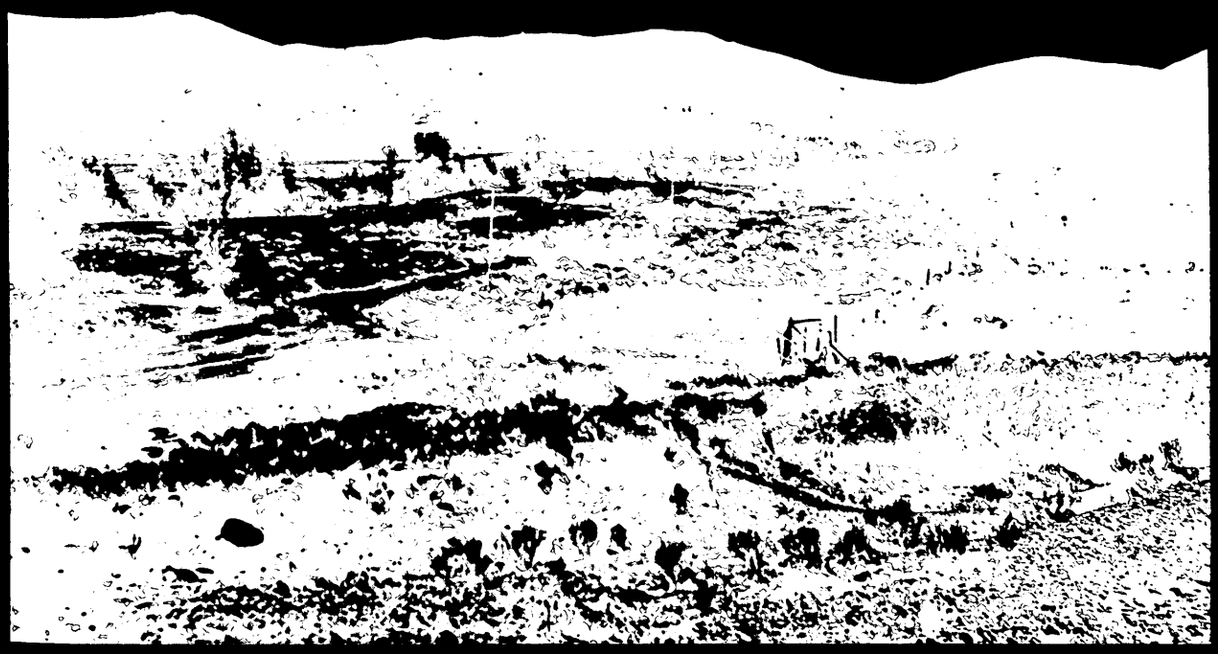

Mouth of Alder Gulch showing old tailing deposits now being reworked. Virginia City is beyond the limits of the picture to the right.

per day divided by the amount of water necessary to be continuously introduced into the plant to effect the complete treatment is designated as the water duty. This is usually expressed in miner's inches. Under the Montana Code, 1.5 cu. ft. per min. equals 1 miner's inch.

In this instance, 1200 g.p.m. of new water is introduced into the plant, equal to 106.66 miner's inches, which suffices for the treatment of 4166 cu.yd. of gravel per day. This gives a water duty of 39 cu.yd. of gravel washed per miner's inch of new water supplied.

The water supply introduced into the plant is recirculated through the several washing operations to such an extent that during any period 4200 g.p.m. of water is in circulation. This gives 89.3 gal. of water used per cubic yard of gravel washed.

TABLE 2. PLANT INVESTMENT

5000-cu. yd. capacity gravel plant		$146,000	
Freight	$11,900		
Trucking	1,000		
Erection	11,200		
	$24,100	24,100	
			$170,100
Two K-48 draglines	$36,700		
Freight, hauling, erecting	3,730		
D. L. buckets	4,850		
	$45,280		45,280
One K-48 shovel	$20,590		
Freight, hauling, erecting	2,020		
	$22,610		22,610
One No. 50 Diesel Caterpillar tractor roadbuilder			7,050
Truck and automobile			1,580
Pipe lines, ditching, etc.			5,000
Power lines and feeder cables, material and labor			8,000
Fresh-water pump, $1,000; bedrock pump, $1,775			2,775
Laboratory and cleanup equipment			1,200
Miscellaneous small tools and sundry			1,200
Total			$264,795

A typical two-weeks' period of normal operation—Aug. 26, 1935, to Sept. 14, 1935—was taken for comparison of actual yardage and cost with that in the estimate (Table 4) following. The yardage treated averaged 5460 cu.yd. per day, and the cost was slightly under that estimated.

The original estimate of operating items is given in Table 4. It is based upon a monthly yardage of 125,000 net (i.e., upon 150,000 cu.yd. per month, less 16.6 per cent total time loss per year); in other words, operating 304 days per year at capacity.

Numerous dragline placer installations of 200 to 1750 cu.yd. daily capacity are operating successfully throughout the West. Costs range from 45 to 11.9c. per cu.yd., with depth of gravel varying from 30 ft. in deep pits to 13 ft. in more shallow ground. The duty of water in these plants varies from 0.35 to 35 cu.yd. of gravel handled per miner's inch of water supplied.

The prevailing type of installation places the washing and sluicing appliances on a pontoon which floats in a pond formed by the discarded tailing and the bank of unworked gravel. This prevents the operator from seeing the bedrock as he fills his bucket under water. A successful modification of dragline practice is in use at Atlantic City, Wyo. Here the washing and sluicing equipment is assembled as a unit on a suitable structure which runs on a sectional track of 90-lb. rails placed in the pit on a leveled section of the tailing, near the working face.

Large-scale dragline placer mining costs from two to three times as much as dredging. However, physical conditions often prevent the successful operation of a dredge, in which situations a dragline setup solves the problem. The adaptability of dragline practice to small as well as large operations has given an impetus to its use in placer mining, and small indeed must a gold gravel deposit be that will not justify its exploitation by some modification of this method.

TABLE 3. OPERATING DATA

Operate with three 8-hour shifts, 4 hours allowed for delays, repairs, cleanup, etc., and working 30 days per month.

			Wages per month
A. Supervision:			
Superintendent, 3 foremen, and 1 bookkeeper			$1,430
B. Metallurgy:			
Metallurgist, assistant metallurgist, and mechanic			575
Sub-total			$2,005
C. Plant operation:			
No. of men	Rate per hr.	Total hr. per mo.	
9 DL and shovel operators	$1.25	2,088	$2,610
2 Oilers	0.75	464	348
2 Oilers	0.62½	464	290
5 Oilers	0.50	1,160	580
3 Plant operators	1.00	696	696
3 Plant helpers	0.62½	696	435
Sub-totals			$4,959
Total payroll per month			$6,964

TABLE 4. OPERATING COST

Power:	
Electric (700 hp.)	$1,500
Gasoline, bedrock pump, etc.	930
Oil and grease	392
Cables	525
Tools, repairs and supplies	3,300
Office supplies	150
Truck and automobile	300
Labor as in Table 3	6,964
State compensation insurance, 7 per cent of payroll	487
General and accident insurance	150
County taxes	100
Total per month before depreciation	$14,798
Depreciation: Plant 50 per cent salvage value after 4 years' operation. Depreciation per month	2,760
Total per month, including depreciation	$17,558

Based upon an estimated yardage of 125,000 cu.yd. per month for the year, the costs are as follows:

Average operating cost, before depreciation	11.83c. per cu.yd.
Average operating cost, including depreciation	14.05c. per cu.yd.