DMEA Form 9
Rev. 6/57

UNITED STATES
DEPARTMENT OF THE INTERIOR
Defense Minerals Exploration Administration

OFFICIAL DOCKET FILE Idm-E NO._____ DMEA NO. 4888

Application
- [X] Denied
- [ ] Withdrawn

Contract
- [ ] Terminated - Not Certified
- [ ] Terminated - Certified
- [ ] Cancelled
- [ ] Royalty Agreement

The records contained in this file are marked (x) and arranged in this order:

Folder No. 1:

7590

Left Side

- [ ] Royalty Audits
- [ ] Certification of Discovery
- [ ] Closing Letter
- [ ] Cost Audits
- [ ] Termination Notice or Agreement
- [ ] Recision Notice
- [ ] Assignment of Contract
- [ ] Contract Amendments
- [ ] Contract with all exhibits and annexes
- [X] Owner's Consent to Lien and Subordination Agreement
- [X] Application and attachments

Right Side

- [ ] Project summary (final)
- [ ] Work Completed analysis (final)

All other material filed in chronological order including the following reports if checked:

- [ ] Field Team Semi-Annual Report for Certified Project
- [ ] Final Field Team Report (Tab)
- [ ] Operator's Final Report (Tab)
- [ ] Interim Field Team Reports
- [ ] Operator's monthly reports and all attachments
- [X] On-site Exam Report (Tab)
- [ ] Settlement Sheets
- [ ] Drill Logs

Additional Folders:

Left Side

Folders No._____: Reports

- [ ] Analysis of Semi-Annual Inspection Reports
- [ ] Project Summary (Interim) by DMEA Engineers

Right Side

- [ ] Field Team Semi-Annual Report for Certified Project
- [ ] Field Team Interim Reports
- [ ] Operator's Monthly Reports with transmittal, narrative and maps.

Folders No._____: Maps (Use pocket folder or envelope)

Folders No._____: Settlement Sheets

Folders No._____: Drill Logs

Folders No._____: Royalty material

17963

MF-205
(Combines and supercedes MF-201 and MF-203)
June 1956

For Government's Use Only
EXPLORATION PROJECT CONTRACT
Operator_____
Docket No. DMEA-_____
Contract No. Idm-E_____
Contract Date_____

RECEIVED
DEC 4 1957
D.M.E.A.

CONSENT TO LIEN
and
SUBORDINATION AGREEMENT 1/

To the United States of America:

Referring to that certain land in the County of Mitchell, State of North Carolina, described as follows: 2/
BEGINNING on a stake in an old line at a black gum stump and locust and runs west, va. 1 degree 56½ poles to a natural set flint rock on top of mountain in Poteat line; thence north 20 degrees 45 minutes west with said line 54 poles to a hickory on a large rock, an old corner; thence ~~east va. 3 degrees with old line 70 poles to a stake and pointers; thence~~ south 1 degree 30 minutes east 2 poles and 9 links to a poplar; thence ~~south 18 degrees east 24 poles to a stake at an old apple tree; thence~~ S 4 deg. 45 min west 18½ poles to poplar on the bank of road; thence S 18 west 2 poles to BEGINNING and containing 19 acres, more or less.,
which is the subject of a proposed exploration project contract, hereinafter called the "contract," with the United States of America, hereinafter called the "Government;" in consideration of the contract and as an inducement to the Government to enter into it, the undersigned hereby--

1. Undertakes and agrees that property in which the Government may acquire an interest or equity under the contract may be dismantled, severed from the land, and removed, as may be provided in the contract; and the Government's interest and equity in such property shall be prior and superior to any adverse right or claim of the undersigned;

2. Grants to the Government a lien upon all of the undersigned's right, title, and interest in the land and upon any production of minerals therefrom, to secure the payment to the Government of a percentage royalty on production as may be provided for by the Contract;

3. Subordinates the undersigned's right, title, claim, or interest in or against the land and in any production therefrom to the rights of the Government under the contract with respect to royalty on production and liens to secure same;

4. Represents and undertakes that there is no claim, lien, or encumbrance upon the undersigned's right, title, claim, or interest in or against the land other than the following: (If "none" insert the word "none." Do not leave lines blank.)

None

1/ Mining or production from the land is not required, and in the absence of production there is no obligation to pay royalty to the Government.

2/ Either (a) insert the legal description of the land, or (b) strike out the words "as follows" and insert "in a lease [or contract, deed, or other document] dated _____, and recorded in Book _____, Page _____, official records of said county." If (b) is used, the book and page of recordation cannot be dispensed with. If the space provided is insufficient, use an Annex, and refer to the Annex in the space.

5. Undertakes and agrees (a) neither to commit any act nor assert any claim in conflict with the provisions of this Agreement; and (b) to give advance notice of the Government's rights under this Agreement to any subsequent transferee, mortgagee, encumbrancer, or lessee of any of the undersigned's right, title, claim, or interest in or against the land, or any production therefrom furnishing the Government with two copies of such notice; and

6. Consents to all amendments (including an agreement of termination) and assignments of the contract without notice thereof, and undertakes and agrees that this Agreement shall extend and apply thereto.

7. Added provision: None (State "None" or "See Annex No.____")

Dated this 26 day of Nov, 1957.

John L. Harris [Seal] _____ [Address]

Dorothy Harris [Seal] _____ [Address]

_____ [Seal] _____ [Address]

_____ [Seal] _____ [Address]

_____ [Seal] _____ [Address]

_____ [Seal] _____ [Address]

I, _____ certify that I am the _____ (Secretary, etc.) of the corporation named herein; that _____ who signed this agreement was then _____ (President or Vice-President, etc.) of said corporation; that said agreement was duly signed for and in behalf of said corporation by authority of its governing body, and was within the scope of its corporate powers.

_____ [Corporate Seal]

MF-205
(Combines and supercedes MF-201 and MF-203)
June 1956

For Government's Use Only
EXPLORATION PROJECT CONTRACT
Operator
Docket No. DMEA-
Contract No. Idm-E
Contract Date

RECEIVED DEC 4 1957 D.M.E.A.

CONSENT TO LIEN
and
SUBORDINATION AGREEMENT 1/

To the United States of America:

Referring to that certain land in the County of Mitchell, State of North Carolina, described as follows: 2/

BEGINNING on a stake in an old line at a black gum stump and locust and runs west, va. 1 degree 56½ poles to a natural set flint rock on top of mountain in Poteat line; thence north 20 degrees 45 minutes west with said line 54 poles to a hickory on a large rock, an old corner; thence ~~east va. 3 degrees with old line 70 poles to a stake and pointers; thence~~ south 1 degree 30 minutes east 2 poles and 9 links to a poplar; thence ~~south 18 degrees east 24 poles to a stake at an old apple tree; thence~~ S 4 deg. 45 min west 18½ poles to poplar on the bank of road; thence S 18 west 2 poles to BEGINNING and containing 19 acres, more or less.

which is the subject of a proposed exploration project contract, hereinafter called the "contract," with the United States of America, hereinafter called the "Government;" in consideration of the contract and as an inducement to the Government to enter into it, the undersigned hereby--

1. Undertakes and agrees that property in which the Government may acquire an interest or equity under the contract may be dismantled, severed from the land, and removed, as may be provided in the contract; and the Government's interest and equity in such property shall be prior and superior to any adverse right or claim of the undersigned;

2. Grants to the Government a lien upon all of the undersigned's right, title, and interest in the land and upon any production of minerals therefrom, to secure the payment to the Government of a percentage royalty on production as may be provided for by the Contract;

3. Subordinates the undersigned's right, title, claim, or interest in or against the land and in any production therefrom to the rights of the Government under the contract with respect to royalty on production and liens to secure same;

4. Represents and undertakes that there is no claim, lien, or encumbrance upon the undersigned's right, title, claim, or interest in or against the land other than the following: (If "none" insert the word "none." Do not leave lines blank.)

None

1/ Mining or production from the land is not required, and in the absence of production there is no obligation to pay royalty to the Government.

2/ Either (a) insert the legal description of the land, or (b) strike out the words "as follows" and insert "in a lease [or contract, deed, or other document] dated _____, and recorded in Book _____, Page _____, official records of said county." If (b) is used, the book and page of recordation cannot be dispensed with. If the space provided is insufficient, use an Annex, and refer to the Annex in the space.

5. Undertakes and agrees (a) neither to commit any act nor assert any claim in conflict with the provisions of this Agreement; and (b) to give advance notice of the Government's rights under this Agreement to any subsequent transferee, mortgagee, encumbrancer, or lessee of any of the undersigned's right, title, claim, or interest in or against the land, or any production therefrom furnishing the Government with two copies of such notice; and

6. Consents to all amendments (including an agreement of termination) and assignments of the contract without notice thereof, and undertakes and agrees that this Agreement shall extend and apply thereto.

7. Added provision: None (State "None" or "See Annex No.____")

Dated this 26 day of Nov., 1957.

John G. Harris [Seal] _____ [Address]

Dorothy Harris [Seal] _____ [Address]

_____ [Seal] _____ [Address]

_____ [Seal] _____ [Address]

_____ [Seal] _____ [Address]

_____ [Seal] _____ [Address]

I, _____ certify that I am the _____ _____ (Secretary, etc.) of the corporation named herein; that _____ _____ who signed this agreement was then _____ (President or Vice-President, etc.) of said corporation; that said agreement was duly signed for and in behalf of said corporation by authority of its governing body, and was within the scope of its corporate powers.

_____

[Corporate Seal]

MF-205
(Combines and supercedes MF-201 and MF-203)
June 1956

For Government's Use Only
EXPLORATION PROJECT CONTRACT
Operator_____
Docket No. DMEA-_____
Contract No. Idm-E_____
Contract Date_____

RECEIVED DEC 4 DMEA

CONSENT TO LIEN
and
SUBORDINATION AGREEMENT 1/

To the United States of America:

Referring to that certain land in the County of Mitchell, State of North Carolina, described as follows: 2/
BEGINNING on a stake in an old line at a black gum stump and locust and runs west, va. 1 degree 56½ poles to a natural set flint rock on top of mountain in Poteat line; thence north 20 degrees 45 minutes west with said line 54 poles to a hickory on a large rock, an old corner; thence east va. 3 degrees with old line 70 poles to a stake and pointers; thence south 1 degree 30 minutes east 2 poles and 9 links to a poplar; thence south 18 degrees east 24 poles to a stake at an old apple tree; thence S 4 deg. 45 min west 18½ poles to poplar on the bank of road; thence S 18 west 2 poles to BEGINNING and containing 19 acres, more or less.
which is the subject of a proposed exploration project contract, hereinafter called the "contract," with the United States of America, hereinafter called the "Government;" in consideration of the contract and as an inducement to the Government to enter into it, the undersigned hereby--

1. Undertakes and agrees that property in which the Government may acquire an interest or equity under the contract may be dismantled, severed from the land, and removed, as may be provided in the contract; and the Government's interest and equity in such property shall be prior and superior to any adverse right or claim of the undersigned;

2. Grants to the Government a lien upon all of the undersigned's right, title, and interest in the land and upon any production of minerals therefrom, to secure the payment to the Government of a percentage royalty on production as may be provided for by the Contract;

3. Subordinates the undersigned's right, title, claim, or interest in or against the land and in any production therefrom to the rights of the Government under the contract with respect to royalty on production and liens to secure same;

4. Represents and undertakes that there is no claim, lien, or encumbrance upon the undersigned's right, title, claim, or interest in or against the land other than the following: (If "none" insert the word "none." Do not leave lines blank.)

None

1/ Mining or production from the land is not required, and in the absence of production there is no obligation to pay royalty to the Government.

2/ Either (a) insert the legal description of the land, or (b) strike out the words "as follows" and insert "in a lease [or contract, deed, or other document] dated _____, and recorded in Book _____, Page _____, official records of said county." If (b) is used, the book and page of recordation cannot be dispensed with. If the space provided is insufficient, use an Annex, and refer to the Annex in the space.

5. Undertakes and agrees (a) neither to commit any act nor assert any claim in conflict with the provisions of this Agreement; and (b) to give advance notice of the Government's rights under this Agreement to any subsequent transferee, mortgagee, encumbrancer, or lessee of any of the undersigned's right, title, claim, or interest in or against the land, or any production therefrom furnishing the Government with two copies of such notice; and

6. Consents to all amendments (including an agreement of termination) and assignments of the contract without notice thereof, and undertakes and agrees that this Agreement shall extend and apply thereto.

7. Added provision: None (State "None" or "See Annex No.____")

Dated this 26 day of Nov., 1957

John J. Harris [Seal] _____ [Address]

Dorothy Harris [Seal] _____ [Address]

_____ [Seal] _____ [Address]

_____ [Seal] _____ [Address]

_____ [Seal] _____ [Address]

_____ [Seal] _____ [Address]

I, _____ certify that I am the _____ _____ (Secretary, etc.) of the corporation named herein; that _____ _____ who signed this agreement was then _____ (President or Vice-President, etc.) of said corporation; that said agreement was duly signed for and in behalf of said corporation by authority of its governing body, and was within the scope of its corporate powers.

_____

[Corporate Seal]

MF-205
(Combines and supercedes MF-201 and MF-203)
June 1956

For Government's Use Only
EXPLORATION PROJECT CONTRACT
Operator _____
Docket No. DMEA- _____
Contract No. Idm-E _____
Contract Date _____

RECEIVED DEC 4 1957 D.M.E.A.

CONSENT TO LIEN
and
SUBORDINATION AGREEMENT 1/

To the United States of America:

Referring to that certain land in the County of Mitchell, State of North Carolina, described as follows: 2/

BEGINNING on a stake in an old line at a black gum stump and locust and runs west, rn. 1 degree 30 poles to a natural set flint rock on top of mountain in Potest line; thence north 20 degrees 45 minutes west with said line 54 poles to a hickory on a large rock, an old corner; thence east rn. 3 degrees with old line 70 poles to 2 stake and pointers; thence south 1 degree 30 minutes east 2 poles and 9 links to a poplar; thence south 18 degrees east 24 poles to a stake at an old apple tree; thence S 4 deg. 45 min west 13½ poles to poplar on the bank of road; thence S 18 west 2 poles to BEGINNING and containing 19 acres, more or less.

which is the subject of a proposed exploration project contract, hereinafter called the "contract," with the United States of America, hereinafter called the "Government;" in consideration of the contract and as an inducement to the Government to enter into it, the undersigned hereby--

1. Undertakes and agrees that property in which the Government may acquire an interest or equity under the contract may be dismantled, severed from the land, and removed, as may be provided in the contract; and the Government's interest and equity in such property shall be prior and superior to any adverse right or claim of the undersigned;

2. Grants to the Government a lien upon all of the undersigned's right, title, and interest in the land and upon any production of minerals therefrom, to secure the payment to the Government of a percentage royalty on production as may be provided for by the Contract;

3. Subordinates the undersigned's right, title, claim, or interest in or against the land and in any production therefrom to the rights of the Government under the contract with respect to royalty on production and liens to secure same;

4. Represents and undertakes that there is no claim, lien, or encumbrance upon the undersigned's right, title, claim, or interest in or against the land other than the following: (If "none" insert the word "none." Do not leave lines blank.)

None

1/ Mining or production from the land is not required, and in the absence of production there is no obligation to pay royalty to the Government.

2/ Either (a) insert the legal description of the land, or (b) strike out the words "as follows" and insert "in a lease [or contract, deed, or other document] dated _____, and recorded in Book _____, Page _____, official records of said county." If (b) is used, the book and page of recordation cannot be dispensed with. If the space provided is insufficient, use an Annex, and refer to the Annex in the space.

5. Undertakes and agrees (a) neither to commit any act nor assert any claim in conflict with the provisions of this Agreement; and (b) to give advance notice of the Government's rights under this Agreement to any subsequent transferee, mortgagee, encumbrancer, or lessee of any of the undersigned's right, title, claim, or interest in or against the land, or any production therefrom furnishing the Government with two copies of such notice; and

6. Consents to all amendments (including an agreement of termination) and assignments of the contract without notice thereof, and undertakes and agrees that this Agreement shall extend and apply thereto.

7. Added provision: None (State "None" or "See Annex No.____")

Dated this 26 day of Nov., 1951.

John J. Harris [Seal] _____ [Address]

Dorothy Harris [Seal] _____ [Address]

_____ [Seal] _____ [Address]

_____ [Seal] _____ [Address]

_____ [Seal] _____ [Address]

_____ [Seal] _____ [Address]

I, _____ certify that I am the _____ _____ (Secretary, etc.) of the corporation named herein; that _____ _____ who signed this agreement was then _____ (President or Vice-President, etc.) of said corporation; that said agreement was duly signed for and in behalf of said corporation by authority of its governing body, and was within the scope of its corporate powers.

_____

[Corporate Seal]

MF-205
(Combines and supercedes MF-201 and MF-203)
June 1956

For Government's Use Only
EXPLORATION PROJECT CONTRACT
Operator _____
Docket No. DMEA- _____
Contract No. Idm-E _____
Contract Date _____

RECEIVED DEC 4 DMEA

CONSENT TO LIEN
and
SUBORDINATION AGREEMENT 1/

To the United States of America:

Referring to that certain land in the County of Mitchell, State of North Carolina, described as follows: 2/

BEGINNING on a stake in an old line of a black gum stump and locust and runs west, m. 1 degree 55E poles to a natural rock on top of mountain in forest line; thence north 39 degrees 45 minutes west with said line 54 poles to a hickory on a large rock, an old corner; thence west m. 3 degrees with old line 70 poles to a stake and pointers; thence south 1 degree 30 minutes east 3 poles and 9 links to a poplar; thence south 18 degrees east 94 poles to a stake at an old apple tree; thence S 4 deg. 45 min west 133 poles to poplar on the bank of road; thence S 18 west 2 poles to BEGINNING and containing 30 acres, more or less.

which is the subject of a proposed exploration project contract, hereinafter called the "contract," with the United States of America, hereinafter called the "Government;" in consideration of the contract and as an inducement to the Government to enter into it, the undersigned hereby--

1. Undertakes and agrees that property in which the Government may acquire an interest or equity under the contract may be dismantled, severed from the land, and removed, as may be provided in the contract; and the Government's interest and equity in such property shall be prior and superior to any adverse right or claim of the undersigned;

2. Grants to the Government a lien upon all of the undersigned's right, title, and interest in the land and upon any production of minerals therefrom, to secure the payment to the Government of a percentage royalty on production as may be provided for by the Contract;

3. Subordinates the undersigned's right, title, claim, or interest in or against the land and in any production therefrom to the rights of the Government under the contract with respect to royalty on production and liens to secure same;

4. Represents and undertakes that there is no claim, lien, or encumbrance upon the undersigned's right, title, claim, or interest in or against the land other than the following: (If "none" insert the word "none." Do not leave lines blank.)

None

1/ Mining or production from the land is not required, and in the absence of production there is no obligation to pay royalty to the Government.

2/ Either (a) insert the legal description of the land, or (b) strike out the words "as follows" and insert "in a lease [or contract, deed, or other document] dated _____, and recorded in Book _____, Page _____, official records of said county." If (b) is used, the book and page of recordation cannot be dispensed with. If the space provided is insufficient, use an Annex, and refer to the Annex in the space.

5. Undertakes and agrees (a) neither to commit any act nor assert any claim in conflict with the provisions of this Agreement; and (b) to give advance notice of the Government's rights under this Agreement to any subsequent transferee, mortgagee, encumbrancer, or lessee of any of the undersigned's right, title, claim, or interest in or against the land, or any production therefrom furnishing the Government with two copies of such notice; and

6. Consents to all amendments (including an agreement of termination) and assignments of the contract without notice thereof, and undertakes and agrees that this Agreement shall extend and apply thereto.

7. Added provision: None (State "None" or "See Annex No.____")

Dated this 26 day of Nov., 195 7

John J. Harris [Seal] _____ [Address]

Dorothy Harris [Seal] _____ [Address]

_____ [Seal] _____ [Address]

_____ [Seal] _____ [Address]

_____ [Seal] _____ [Address]

_____ [Seal] _____ [Address]

I, _____ certify that I am the _____ _____ (Secretary, etc.) of the corporation named herein; that _____ _____ who signed this agreement was then _____ (President or Vice-President, etc.) of said corporation; that said agreement was duly signed for and in behalf of said corporation by authority of its governing body, and was within the scope of its corporate powers.

_____

[Corporate Seal]

MF-205
(Combines and supercedes MF-201 and MF-203)
June 1956

For Government's Use Only
EXPLORATION PROJECT CONTRACT
Operator_____
Docket No. DMEA-_____
Contract No. Idm-E_____
Contract Date_____

RECEIVED

CONSENT TO LIEN
and
SUBORDINATION AGREEMENT 1/

To the United States of America:

Referring to that certain land in the County of _____, State of _____, described as follows: 2/

[illegible]

which is the subject of a proposed exploration project contract, hereinafter called the "contract," with the United States of America, hereinafter called the "Government;" in consideration of the contract and as an inducement to the Government to enter into it, the undersigned hereby--

1. Undertakes and agrees that property in which the Government may acquire an interest or equity under the contract may be dismantled, severed from the land, and removed, as may be provided in the contract; and the Government's interest and equity in such property shall be prior and superior to any adverse right or claim of the undersigned;

2. Grants to the Government a lien upon all of the undersigned's right, title, and interest in the land and upon any production of minerals therefrom, to secure the payment to the Government of a percentage royalty on production as may be provided for by the Contract;

3. Subordinates the undersigned's right, title, claim, or interest in or against the land and in any production therefrom to the rights of the Government under the contract with respect to royalty on production and liens to secure same;

4. Represents and undertakes that there is no claim, lien, or encumbrance upon the undersigned's right, title, claim, or interest in or against the land other than the following: (If "none" insert the word "none." Do not leave lines blank.)

_____

None

_____

1/ Mining or production from the land is not required, and in the absence of production there is no obligation to pay royalty to the Government.

2/ Either (a) insert the legal description of the land, or (b) strike out the words "as follows" and insert "in a lease [or contract, deed, or other document] dated _____, and recorded in Book _____, Page _____, official records of said county." If (b) is used, the book and page of recordation cannot be dispensed with. If the space provided is insufficient, use an Annex, and refer to the Annex in the space.

5. Undertakes and agrees (a) neither to commit any act nor assert any claim in conflict with the provisions of this Agreement; and (b) to give advance notice of the Government's rights under this Agreement to any subsequent transferee, mortgagee, encumbrancer, or lessee of any of the undersigned's right, title, claim, or interest in or against the land, or any production therefrom furnishing the Government with two copies of such notice; and

6. Consents to all amendments (including an agreement of termination) and assignments of the contract without notice thereof, and undertakes and agrees that this Agreement shall extend and apply thereto.

7. Added provision: None (State "None" or "See Annex No.____")

Dated this 26 day of Nov., 1957

John J. Harris [Seal] _____ [Address]

Dorothy Harris [Seal] _____ [Address]

_____ [Seal] _____ [Address]

_____ [Seal] _____ [Address]

_____ [Seal] _____ [Address]

_____ [Seal] _____ [Address]

I, _____ certify that I am the _____ _____ (Secretary, etc.) of the corporation named herein; that _____ _____ who signed this agreement was then _____ (President or Vice-President, etc.) of said corporation; that said agreement was duly signed for and in behalf of said corporation by authority of its governing body, and was within the scope of its corporate powers.

_____

[Corporate Seal]

UNITED STATES
DEPARTMENT OF THE INTERIOR
DEFENSE MINERALS EXPLORATION ADMINISTRATION
ROOM 25 FED. BLDG.
KNOXVILLE 2, TENN.

December 2, 1957

Memorandum

To: Operating Committee, DMEA - Washington

From: Executive Officer, DMEA - Region V - Knoxville, Tenn.

Subject: Application : J. J. Harris, R#1, Marion, N. C.
McHone Mine, Mitchell County, N. C.

Enclosed is an application for exploration aid submitted by John J. Harris, of Marion, North Carolina.

Robert A. Laurence

Form MF-103
Revised Feb. 1957

UNITED STATES
DEPARTMENT OF THE INTERIOR

Budget Bureau No. 42-R1035.3
Approval expires June 30, 1958

DEFENSE MINERALS EXPLORATION ADMINISTRATION

APPLICATION FOR AID IN AN EXPLORATION PROJECT

PURSUANT TO DMEA ORDER I, UNDER THE DEFENSE PRODUCTION ACT OF 1950, AS AMENDED

NAME OF APPLICANT (Full legal name and mailing address as it should appear on contract if one is executed)

John J. Harris
Route #1
Marion, North Carolina

RECEIVED DEC 4 1957 DMEA

APPLICANT NOT TO USE THIS BLOCK

Docket Number: DMEA-4888

Date Received: 12-4-57

Government Participation %:

Region: V

Division Code: 600

BUSINESS ORGANIZATION (Check one)

- Individual [X]
- Corporation [ ]
- Partnership [ ]
- Other (Specify) [ ]

State in which firm is organized: NC

LIST CORPORATE OFFICERS OR PARTNERS HERE, IF APPLICABLE

Name	Address	Title

Mineral(s) for which you wish to explore: Green Mica

Estimated Cost of Project: $ 5000.00

LOCATION OF PROPERTY

Name	County	State
McHone Mine (Spruce Pine)	Mitchell	N. C.

GENERAL INSTRUCTIONS

Before filling out this application, please read DMEA Order-I, Amended, "Government Aid in Defense Exploration Projects." To assure prompt action, your application must provide all applicable material and information specified on the back of this application form. Avoid unnecessary correspondence and delays by submitting complete and accurate information. *Please submit four copies of this application and all accompanying papers* except as otherwise noted. Place your name and address on each sheet. Each item of information, maps, and reports required as a part of this application is described on the back of this form. Identify each attached statement by the item number to which it applies. If an item does not apply to your application, show the item number on your statement and after it write "not applicable." Maps or sketches should be used to supplement narrative descriptions of the property location and boundaries in item 1, existing mine workings and geology in item 2, and the proposed exploration project in item 4. When this information is not too complex, all of it may be shown on one map or sketch. All documents and other attachments submitted as a part of this application, except those in item 2(g) which you mark to be returned, become the property of the Government and will not be returned to the applicant. Send true copies, *not originals*, of leases, contracts, and other documents which are an essential part of your business records. *File this application with the Defense Minerals Exploration Administration, Department of the Interior, Washington 25, D. C., or with the nearest DMEA Field Office.*

CERTIFICATION

The undersigned, whether as an individual, corporate officer, partner, or otherwise, both in his own behalf and acting for the applicant, certifies that the information set forth in this form and accompanying papers is correct and complete, to the best of his knowledge and belief.

November 26, 1957
Dated

RECEIVED NOV 29 1957

John J. Harris
BY (Signature)

Owner
Title

A wilfully false statement or certification to any Department or Agency of the United States Government is a criminal offense. U. S. Code, Title 18, Sec. 1001.

1(a) In Grassy Creek Twp, Mitchell County, N. C., and BEGINNING on a stake in an old line at black gum stump and locust and runs west var. 1 deg. 56½ poles to a natural set flint rock on top of mountain in Poteat line; thence north 20 deg. 45 minutes west with said line 54 poles to a hickory on a large rock, an old corner; thence east var 3 deg. with old line 70 poles to a stake and pointers; thence south 1 degree 30 minutes east 2 poles and 9 links to a poplar; thence south 18 degrees east 24 poles to a stake at an old apple tree; thence south 4 degrees 45 minutes west 18½ poles to a poplar on the bank of the road; thence south 18 degrees west 2 poles to the point of BEGINNING, and containing 19 acres, more or less.
(b) McHone Mine.
(c) Owner
(d) None

2(a) Considerable amount of prospecting has been done
(b) Prospecting with excellent results
(c) Unknown
(d) Unknown
(e) Vein
(f) Prospecting only
(g) Map of property is enclosed.

3 (a) Property is located just outside city limits of Town of Spruce Pine. Contact John J. Harris, Rt #1, Marion, N. C. for examination.
(b) Spruce Pine, North Carolina.

4. (a) Propose 50 feet of shafting and 50 feet of drifting on each side.
(c) Begin within 30 days and complete in 6 months
(d)

5. (a) Prospecting only. Will employ capable workers.

6. Estimate of Costs:

50 feet of shafting @ $30	1500.00
100 feet of drifting @ $30	3000.00
Miscellaneous Expenses	500.00
TOTAL	$5000.00

7. (a) Yes
(b) Equipment-Have air compressor, steel, bulldozer and jack hammer.

OFFICIAL FILE COPY
DMEA
RECEIVED DEC 4 1957

DATE	INITIALS	CODE

U. S. Government Messenger Envelope

Standard Form No. 65 (Rev. 1/46)

1. Use blocks consecutively, one a
2. Void previous block.
3. Write clearly.

NAME OR TITLE OF PERSON, DEPARTMENT, ADDRESS, AND ROOM		NAME OR TITLE OF PERSON, DEPARTMENT, ADDRESS, AND ROOM	
Mr. W. N. Chamberlain PMEA - Room 4454	RUN STOP		RUN STOP
	RUN STOP		RUN STOP
	RUN STOP		RUN STOP
	RUN STOP		RUN STOP
	RUN STOP		RUN STOP
	RUN STOP		RUN STOP
	RUN STOP		RUN STOP
	RUN STOP		RUN STOP
	RUN STOP		RUN STOP
	RUN STOP		RUN STOP

Send surplus envelopes to supply room for reissue.

Use other side

Use RUN and STOP only when messenger service between Government buildings in Washington is required. Your mail room has RUN and STOP information.

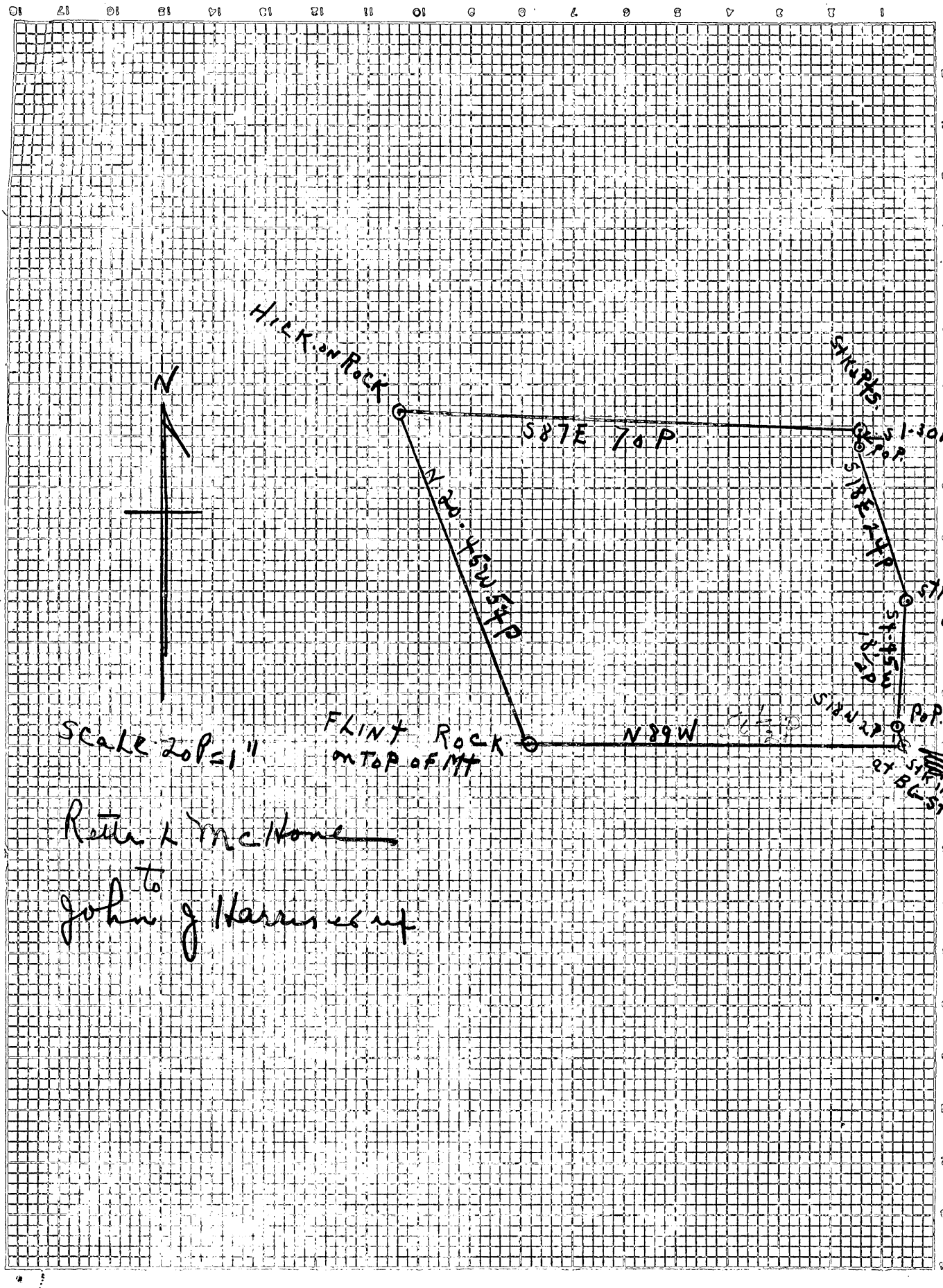
N
Hick. on Rock
S87E 70P
N 20 W 45P
Stumps
S1-30E 2P 9L
Stop.
S18E 24P
Stiles apple tree
S7-45W 18L 2P
S18W 2P
Pop. on Bank of Road
Flint Rock on top of Mt
N89W
Old Line
Scale 20P=1"
Reuben L McKone
John J Harris est

EXECUTIVE CORRESPONDENCE

130

Probably marginal but Field Team suggests larger quantity of low grade mica ($6.78 per lb.) against less higher grade of($12.00 per lb.)

Selfridge did not surname contract.

FRJohnson

RETURN THIS COVER WITH THE FILE COPIES TO ORIGINATING OFFICE

Monnetallic

Contract
3/27.

DMEA Form 7
(12-56)

OFFICIAL FILE COPY

Date	Surname	Code
3/26	Anderson	600
3/26	Houk	600
3-26	Chambers	800
3/28	[illegible]	130
"	Johnson	110
		100
		220

600

Mr. Robert A. Laurence
Executive Officer, DMEA
Field Team, Region V
Room 13, Post Office Bldg.
Knoxville 2, Tennessee

Re: Docket No. DMEA-4388-Mica
John J. Harris
McHone Mine
Mitchell County, North Carolina

Dear Mr. Laurence:

Enclosed are the original and four copies of a proposed short-form contract signed by the Administrator for the Government. It consists of the form, Annex I (1 page), Exhibit A (2 pages), and one map. Also enclosed are two extra copies of Annex I, Exhibit A, and the map for Field Team use.

If the proposed contract meets with your approval, present it to the Applicant for execution. Copies of the executed contract are to be distributed in the usual manner. If any part of this proposed contract does not have either your approval or that of the Applicant and cannot be amended within your delegated authority, then the original and all copies of the contract and the two extra copies of Annex I, Exhibit A, and the map are to be returned to this office, together with the proposed changes for consideration.

Copies of memoranda dated February 26 and 27, 1958, by Mr. W. P. Williams, USGS, and Mr. W. F. Dietrich, USBM, respectively, relating to the project are enclosed.

Sincerely yours,

George C. Selfridge

Chairman, Operating Committee (3/28)

Approved:

P. F. Yopes (3/28)
Member, Bureau of Mines

Thor H. Kiilsgaard (3/28)
Member, Geological Survey

WCAnderson:gad 3/26/58
Copy to: Admr. R. File
Operating Committee
Mr. Kiilsgaard, 5222
Mr. Dietrich, 3061
Mr. Houk

Enclosures 11

8623

UNITED STATES
DEPARTMENT OF THE INTERIOR
DEFENSE MINERALS EXPLORATION ADMINISTRATION
WASHINGTON 25, D. C. 600

Mr. Robert A. Laurence
Executive Officer, DMEA
Field Team, Region V
Room 13, Post Office Bldg.
Knoxville 2, Tennessee

Re: Docket No. DMEA-4888-Mica
John J. Harris
McHone Mine
Mitchell County, North Carolina

Dear Mr. Laurence:

Enclosed are the original and four copies of a proposed short-form contract signed by the Administrator for the Government. It consists of the form, Annex I (1 page), Exhibit A (2 pages), and one map. Also enclosed are two extra copies of Annex I, Exhibit A, and the map for Field Team use.

If the proposed contract meets with your approval, present it to the Applicant for execution. Copies of the executed contract are to be distributed in the usual manner. If any part of this proposed contract does not have either your approval or that of the Applicant and cannot be amended within your delegated authority, then the original and all copies of the contract and the two extra copies of Annex I, Exhibit A, and the map are to be returned to this office, together with the proposed changes for consideration.

Copies of memoranda dated February 26 and 27, 1958, by Mr. W. P. Williams, USGS, and Mr. W. F. Dietrich, USBM, respectively, relating to the project are enclosed.

Sincerely yours,

George C. Selfridge

Chairman, Operating Committee

Approved:

Member, Bureau of Mines

Member, Geological Survey

Enclosures 11

UNITED STATES
DEPARTMENT OF THE INTERIOR
DEFENSE MINERALS EXPLORATION ADMINISTRATION
WASHINGTON 25, D. C. 600

Mr. Robert A. Laurence
Executive Officer, DMEA
Field Team, Region V
Room 13, Post Office Bldg.
Knoxville 2, Tennessee

Re: Docket No. DMEA-4888-Mica
John J. Harris
McHone Mine
Mitchell County, North Carolina

Dear Mr. Laurence:

Enclosed are the original and four copies of a proposed short-form contract signed by the Administrator for the Government. It consists of the form, Annex I (1 page), Exhibit A (2 pages), and one map. Also enclosed are two extra copies of Annex I, Exhibit A, and the map for Field Team use.

If the proposed contract meets with your approval, present it to the Applicant for execution. Copies of the executed contract are to be distributed in the usual manner. If any part of this proposed contract does not have either your approval or that of the Applicant and cannot be amended within your delegated authority, then the original and all copies of the contract and the two extra copies of Annex I, Exhibit A, and the map are to be returned to this office, together with the proposed changes for consideration.

Copies of memoranda dated February 26 and 27, 1958, by Mr. W. P. Williams, USGS, and Mr. W. F. Dietrich, USBM, respectively, relating to the project are enclosed.

Sincerely yours,

George C. Selfridge
Chairman, Operating Committee

Approved:

P. F. Yopes
Member, Bureau of Mines

Thor H. Kiilsgaard
Member, Geological Survey

Enclosures 11

UNITED STATES
DEPARTMENT OF THE INTERIOR
DEFENSE MINERALS EXPLORATION ADMINISTRATION
WASHINGTON 25, D. C.

600

Mr. Robert A. Laurence
Executive Officer, DMEA
Field Team, Region V
Room 13, Post Office Bldg.
Knoxville 2, Tennessee

Re: Docket No. DMEA-4388-Mica
John J. Harris
McHone Mine
Mitchell County, North Carolina

Dear Mr. Laurence:

Enclosed are the original and four copies of a proposed short-form contract signed by the Administrator for the Government. It consists of the form, Annex I (1 page), Exhibit A (2 pages), and one map. Also enclosed are two extra copies of Annex I, Exhibit A, and the map for Field Team use.

If the proposed contract meets with your approval, present it to the Applicant for execution. Copies of the executed contract are to be distributed in the usual manner. If any part of this proposed contract does not have either your approval or that of the Applicant and cannot be amended within your delegated authority, then the original and all copies of the contract and the two extra copies of Annex I, Exhibit A, and the map are to be returned to this office, together with the proposed changes for consideration.

Copies of memoranda dated February 26 and 27, 1958, by Mr. W. F. Williams, USGS, and Mr. W. F. Dietrich, USBM, respectively, relating to the project are enclosed.

Reviewed by
DMEA OPERATING COMMITTEE
3-28-58
Approved: (date)

P. F. Yopes
Member, Bureau of Mines

Thor H. Kiilsgaard
Member, Geological Survey

Enclosures 11

Sincerely yours,

George C. Selfridge

Chairman, Operating Committee

WCAnderson:gad 3/26/58
Copy to: Admr. R. File
Operating Committee
Mr. Kiilsgaard, 5222
Mr. Dietrich, 3061
Mr. Houk

Mr. Robert A. Laurence
Executive Officer, DMEA
Field Team, Region V
Room 13, Post Office Bldg.
Knoxville 2, Tennessee

Re: Docket No. DMEA-4388-Mica
John J. Harris
McHone Mine
Mitchell County, North Carolina

Dear Mr. Laurence:

Enclosed are the original and four copies of a proposed short-form contract signed by the Administrator for the Government. It consists of the form, Annex I (1 page), Exhibit A (2 pages), and one map. Also enclosed are two extra copies of Annex I, Exhibit A, and the map for Field Team use.

If the proposed contract meets with your approval, present it to the Applicant for execution. Copies of the executed contract are to be distributed in the usual manner. If any part of this proposed contract does not have either your approval or that of the Applicant and cannot be amended within your delegated authority, then the original and all copies of the contract and the two extra copies of Annex I, Exhibit A, and the map are to be returned to this office, together with the proposed changes for consideration.

Copies of memoranda dated February 26 and 27, 1958, by Mr. W. F. Williams, USGS, and Mr. W. F. Dietrich, USBM, respectively, relating to the project are enclosed.

Sincerely yours,

George C. Selfridge

Chairman, Operating Committee

Approved:

P. F. Yopes

Member, Bureau of Mines

Thor H. Kiilsgaard

Member, Geological Survey

Enclosures 11

WCAnderson:gad 3/26/58
Copy to: Admr. R. File
Operating Committee
Mr. Kiilsgaard, 5222
Mr. Dietrich, 3061
Mr. Houk

Mr. Robert A. Laurence
Executive Officer, DMEA
Field Team, Region V
Room 13, Post Office Bldg.
Knoxville 2, Tennessee

Re: Docket No. DMEA-4388-Mica
John J. Harris
McHone Mine
Mitchell County, North Carolina

Dear Mr. Laurence:

Enclosed are the original and four copies of a proposed short-form contract signed by the Administrator for the Government. It consists of the form, Annex I (1 page), Exhibit A (2 pages), and one map. Also enclosed are two extra copies of Annex I, Exhibit A, and the map for Field Team use.

If the proposed contract meets with your approval, present it to the Applicant for execution. Copies of the executed contract are to be distributed in the usual manner. If any part of this proposed contract does not have either your approval or that of the Applicant and cannot be amended within your delegated authority, then the original and all copies of the contract and the two extra copies of Annex I, Exhibit A, and the map are to be returned to this office, together with the proposed changes for consideration.

Copies of memoranda dated February 26 and 27, 1958, by Mr. W. F. Williams, USGS, and Mr. W. F. Dietrich, USBM, respectively, relating to the project are enclosed.

Sincerely yours,

George C. Selfridge

Chairman, Operating Committee

Approved:

P. F. Yopes

Member, Bureau of Mines

Thor H. Kiilsgaard

Member, Geological Survey

Enclosures 11

WCAnderson:gad 3/26/58
Copy to: Admr. R. File
Operating Committee
Mr. Kiilsgaard, 5222
Mr. Dietrich, 3061
Mr. Houk

Mr. Robert A. Lawrence
Executive Officer, DMEA
Field Team, Region V
Room 13, Post Office Bldg.
Knoxville 2, Tennessee

Re: Docket No. DMEA-4888-Mica
John J. Harris
McKenna Mine
Mitchell County, North Carolina

Dear Mr. Lawrence:

Enclosed are the original and four copies of a proposed short-form contract signed by the Administrator for the Government. It consists of the form, Annex I (1 page), Exhibit A (2 pages), and one map. Also enclosed are two extra copies of Annex I, Exhibit A, and the map for Field Team use.

If the proposed contract meets with your approval, present it to the Applicant for execution. Copies of the executed contract are to be distributed in the usual manner. If any part of this proposed contract does not have either your approval or that of the Applicant and cannot be amended within your delegated authority, then the original and all copies of the contract and the two extra copies of Annex I, Exhibit A, and the map are to be returned to this office, together with the proposed changes for consideration.

Copies of memoranda dated February 26 and 27, 1958, by Mr. W. P. Williams, USGS, and Mr. W. F. Dietrich, USBM, respectively, relating to the project are enclosed.

Sincerely yours,

George C. Selfridge

Chairman, Operating Committee

Approved:

P. F. Yopes
Member, Bureau of Mines

Thor H. Kiilsgaard
Member, Geological Survey

Enclosures 11

WCAnderson:gad 3/26/58
Copy to: Admr. R. File
Operating Committee
Mr. Kiilsgaard, 5222
Mr. Dietrich, 3061
Mr. Houk

Mr. Robert A. Lawrence
Executive Officer, DMRA
Field Team, Region V
Room 13, Post Office Bldg.
Knoxville 2, Tennessee

Re: Docket No. DMRA-4388-Mica
John J. Harris
McKone Mine
Mitchell County, North Carolina

Dear Mr. Lawrence:

Enclosed are the original and four copies of a proposed short-form contract signed by the Administrator for the Government. It consists of the form, Annex I (1 page), Exhibit A (2 pages), and one map. Also enclosed are two extra copies of Annex I, Exhibit A, and the map for Field Team use.

If the proposed contract meets with your approval, present it to the Applicant for execution. Copies of the executed contract are to be distributed in the usual manner. If any part of this proposed contract does not have either your approval or that of the Applicant and cannot be amended within your delegated authority, then the original and all copies of the contract and the two extra copies of Annex I, Exhibit A, and the map are to be returned to this office, together with the proposed changes for consideration.

Copies of memoranda dated February 26 and 27, 1958, by Mr. W. P. Williams, USGS, and Mr. W. F. Dietrich, USBM, respectively, relating to the project are enclosed.

Sincerely yours,

George C. Selfridge

Chairman, Operating Committee

Approved:

P. F. Yopes

Member, Bureau of Mines

Thor H. Kiilsgaard

Member, Geological Survey

Enclosures 11

WCAnderson:gad 3/26/58
Copy to: Admr. R. File
Operating Committee
Mr. Kiilsgaard, 5222
Mr. Dietrich, 3061
Mr. Houk

EXECUTIVE CORRESPONDENCE

130

RETURN THIS COVER WITH THE FILE COPIES TO ORIGINATING OFFICE

Government's copy

MF-200A
(Rev. April 1956)

UNITED STATES OF AMERICA
DEPARTMENT OF THE INTERIOR
DEFENSE MINERALS EXPLORATION ADMINISTRATION
EXPLORATION PROJECT CONTRACT
(Short Form)

DMEA No.	*Commodity*	*Contract No. Idm–E*	*County*	*State*
4888	Mica		Mitchell	North Carolina

It is agreed ....., between the United States of America, acting through the Department of the Interior, Defense Minerals Exploration Administration, hereinafter called the "Government," and John J. Harris

whose mailing address is Route #1
Marion, North Carolina
hereinafter called the "Operator," as follows:

ARTICLE 1. *Authority and project.*—(a) This contract is entered into under the authority of the Defense Production Act of 1950, as amended. It consists of this form (MF–200A), the attached Annex I (land description), Exhibit A (work and costs), and the maps and documents listed therein. The project work is a search for indicated or undeveloped deposits of the commodity designated above. The Operator shall begin the work on or before ....., and, subject to the provisions of Article 7 and Exhibit A, shall complete the work within 8 months from the date of the contract.

(b) The description of the work and the fixed cost for each unit of work to be performed (per foot of drilling, per foot of drifting, per hour of operations, etc.) are hereby agreed upon as specified in Exhibit A. The estimated total cost of the project work is $5,152.00. The Government will contribute 75 percent of the fixed unit cost of the work performed, not exceeding $3,864.00, in accordance with the provisions of Articles 4 and 5.

(c) The Operator shall not transfer or assign this contract or any right or obligation thereunder without the written consent of the Government.

ARTICLE 2. *Operator's property rights.*—(a) The Operator represents and undertakes that Annex I correctly describes the land which is the subject of this contract and the nature of the Operator's rights of property and possession therein (whether as owner, lessee, or otherwise), and that such right, title, or interest is subject only to the following claims, liens, or encumbrances: None

(b) The Subordination Agreement of the holder of any claim, lien, or encumbrance listed above and (if the Operator does not hold the legal title) the Consent to Lien of any holder of the legal title of the land (lessor, seller, optionor, etc.) are attached, as follows: .....

(c) The Operator shall preserve and maintain his right, title, and interest in the land and his right to the possession thereof for the purposes of this contract, and shall devote the land and all existing improvements, facilities, buildings, installations, and appurtenances to the purposes of this contract. The Operator shall neither transfer, convey, nor surrender the land nor any right, title, or interest therein, nor permit nor suffer any claim, lien, or encumbrance thereon, without expressly referring to and providing

in the instrument of conveyance, lien, or encumbrance for the preservation of the Government's right to a percentage royalty on production and lien for the payment thereof. Two copies of such instrument shall be furnished to the Government. If the Government's rights to royalty as provided in Article 6 have been terminated, the provisions of this paragraph (c) shall become inapplicable.

ARTICLE 3. *Performance of the work.*—(a) Operator's responsibility.—The work shall be performed diligently, efficiently, expertly, in a workmanlike manner, and in accordance with good mining standards and State regulations governing health, safety, and liability insurance covering employment. The Operator shall provide suitable and adequate equipment, facilities, materials, supplies, and labor to complete the work, as specified in Article 1 (a).

(b) *Government may inspect.*—The Operator shall consult with and inform the Government on all phases of the work as it progresses. The Government may enter at all reasonable times to inspect the work under the contract, and also after certification of discovery or development, to inspect production operations and underground workings. The Operator shall provide the Government with all reasonable means of access for such inspections.

ARTICLE 4. *Contribution by the Government.*—The Government will make its contribution on the basis of the monthly vouchers referred to in Article 5 (b); but all payments by the Government are provisional only, subject to audit, and until the account between the Operator and the Government is finally audited and settled and the Operator's final report has been rendered, the Government may withhold such sums as it sees fit but not in excess of 10 percent of the estimated total cost of the work. To the extent that excesses over fixed unit costs or any excess over the estimated total cost may be necessary for the performance of the work, the Operator shall incur and pay such excesses for his own account without contribution by the Government. The Government will not contribute to the cost of any work performed prior to the date of this contract. The Government may make payments for the account of the Operator directly to independent contractors and suppliers rather than to the Operator.

ARTICLE 5. *Reports, accounts, audits.*—(a) Operator's records.—The Operator shall keep suitable records and accounts of the units of work performed and of any production in which the Government may have an interest; and shall preserve those with respect to work performed for at least three years after final payment by the Government, and those with respect to production for at least three years after any obligation to pay royalties to the Government has terminated. The Government may inspect and audit said records and accounts at any time, either by itself or by a certified public accountant. The Comptroller General of the United States or his representative, until the expiration of said three-year periods, shall have access to and the right to examine all pertinent books, documents, papers, and records of the Operator.

(b) *Progress reports and vouchers.*—The Operator shall provide the Government with five copies of monthly progress reports in three sections as follows: (1) Operator's Monthly Report and Voucher showing a detailed statement of units of work performed during the reporting period; (2) Operator's Unit Cost and Progress Report showing the various types of work performed during the reporting period and the fixed unit costs incurred for each type of work; and (3) a Narrative Report of the work performed during the reporting period including adequate engineering-geological maps or sketches, drill hole logs and locations, and assay reports on samples taken concurrently with advance in mineralized ground. (Forms for reporting under (1) and (2) above will be provided by the Government.)

(c) *Final report.*—Upon completion of the work or termination of the Government's obligation to contribute to costs, the Operator shall furnish the Government with five copies of a final report (in addition to the final progress report and voucher). This final report shall include a geological and engineering evaluation of the results of the work performed under the contract with an estimate of the ore reserves resulting from such work, complete assay data, adequate geological and engineering maps or sketches, and a summary of the work performed and the unit costs thereof.

(d) *Report of sales.*—The Operator shall provide the Government with suitable accounting and documentary evidence covering all production to which the Government's percentage royalty relates, such as copies of smelter or concentrator settlement sheets, and certified accounts of production and sale or other disposition of production.

(e) *Compliance with requirements.*—If in the opinion of the Government any of the Operator's reports, records, or accounts are insufficient or incomplete, or if the Operator fails to make them, the Government may procure the making or completion of such with suitable attachments as an expense of the work to which the Operator shall contribute. The Government may withhold approval and payment of any vouchers relating to insufficient or incomplete reports, records, or accounts.

ARTICLE 6. *Repayment by Operator.*—(a) *Certification.*—If the Government considers that a discovery or development from which production may be made has resulted from the work, the Government, at any time not later than six months after the Operator has rendered a sufficient final report (see Article 5), may so certify in writing to the Operator. Such certification shall describe broadly or indicate the nature of the discovery or development.

(b) *Royalty on production.*—The Operator, as principal if the Operator is the producer or as surety if the Operator is not the producer (for example, if the Operator either transfers or fails to retain his interest in the land), shall pay to the Government a royalty on all minerals mined or produced from the land, as follows: (1) regardless of any certification of discovery or development, from the date of the contract until the lapse of the time within which the Government may make such certification or until the total net amount contributed by the Government without interest is fully repaid, whichever occurs first; or (2) if the Government makes a certification of discovery or development, for a period of ten years from the date of the contract or until the total net amount contributed by the Government without interest is fully repaid, whichever occurs first.

(c) *Basis for computation.*—The Government's royalty shall be a percentage of the gross proceeds (including any bonuses, premiums, allowances, or other benefits) from the production sold, in the form sold (ore, concentrates, metal, or equivalent), at the point of delivery (the f. o. b. point); *except,* that charges of *the buyer* arising in the regular course of business, and shown as deductions on the buyer's settlement sheets, on account of the cost of treatment processes performed by *the buyer,* sampling and assaying to determine the value of the production sold, and freight paid by *the buyer* to a carrier (not the Operator), shall be allowed as deductions in arriving at the "gross proceeds" as that term is used herein. Any costs of treatment processes, sampling, assaying, or transportation performed or paid by the Operator or by anyone other than the buyer are not deductible in arriving at the "gross proceeds" as that term is here used. The term "treatment processes," as here used, means those processes (such as milling, concentrating, smelting, refining, or equivalent, but excluding fabricating or manufacturing) applied to the crude ore or other production after it is extracted from the ground to put it into a commercially marketable form.

(d) *Unsold production.*—If any production (ore, concentrates, metal, or equivalent) after the lapse of six months from the date the ore was extracted from the ground remains neither sold nor used by the Operator in integrated manufacturing or fabricating operations (for instance, if it is stockpiled), the Government, at its option, as long as it so remains, may require the computation and payment of its royalty on the value of such production in the form (ore, concentrates, metal, or equivalent) it is in when the Government elects to require computation and payment. If any production is used by the Operator in integrated manufacturing or fabricating operations before the Government makes its election, the Government's royalty on such production shall be computed on the value thereof in the form in which and at the time it is so used. "Value" as here used means what is or would be gross income from mining operations for percentage depletion purposes in Federal income tax determination, or the market value, whichever is greater.

(e) *Percentages of royalty.*—The percentages of the Government's royalty shall be as follows:

One and one-half (1½) percent of amounts ("gross proceeds" or "value") not in excess of eight dollars ($8.00) per ton of production in the form in which sold, held, or used, plus one-half (½) percent for each additional full fifty cents ($0.50) by which such amounts exceed eight dollars ($8.00) per ton, but not in excess of five (5) percent of such amounts.

(For instance: the royalty on an amount of five dollars ($5.00) per ton would be one and one-half (1½) percent; on an amount of ten dollars ($10.00) per ton, three and one-half (3½) percent.)

(f) *Time for computation and payment.*—The Government's royalty shall be computed and paid currently upon each lot sold, held, or used in integrated operations, as the case may be, as above provided in this Article.

(g) *Lien for payment.*—To secure the payment of its percentage royalty, there is hereby granted to the Government a lien upon the land or the Operator's interest in the land and upon any production of minerals therefrom until the royalty claim is extinguished by lapse of time or is fully paid.

(h) *Notice to purchasers.*—The Operator shall give notice of the Government's claim for royalty to any purchaser of the production, and shall authorize and direct such purchaser to pay the royalty directly to the Government and to furnish the Government with copies of the settlement sheets. If the records of any production and sales or other disposition of production, whether the production is by the Operator or by others, are not made available to the Government, the amount of the royalty may be estimated by the Administrator, Defense Minerals Exploration Administration, or his successor, and his estimate thereof shall be final and binding upon the Operator.

(i) *No obligation to produce.*—Nothing in this contract is to be construed as imposing any obligation on the Operator or the Operator's successor in interest to engage in any production operations.

(j) *Government not obligated to buy.*—Nothing in this contract shall be construed as imposing any obligation on the Government to purchase any minerals mined or produced from the land.

ARTICLE 7. *Termination of the Government's obligations.*—(a) If in the opinion of the Government operations at any time have failed to achieve anticipated results that indicate the probability of making a worthwhile discovery and in the opinion of the Government further operations are not justified, the Government may give the Operator written notice thereof, and thereupon the Government shall be free of all obligation to pay on account of units of work not then performed, and the Operator shall be free of all further obligation to prosecute the work other than such as may be necessary and incidental to winding up, reporting, and accounting.

(b) If in the opinion of the Government the Operator is in any manner in default under the terms of the contract, the Government may give the Operator written notice of such default with a specification of reasonable time within which the default must be cured; and if the Operator fails to cure such default as required, thereupon the Government shall be relieved of all obligation to pay on account of units of work not performed when the notice was given, and the Operator shall be free of all obligation to prosecute the work other than such as may be necessary and incidental to winding up, reporting, and accounting. The Government may also avail itself of any other remedy the law may provide for breach of contract, including the right to rescind the contract and to demand repayment of all moneys contributed by the Government under the contract.

(c) The giving of any notice by the Government under the provisions of this Article 7 shall not affect the Government's rights as provided for in the contract with respect to a percentage royalty, and liens to secure the payment thereof, and such rights shall be fully preserved.

ARTICLE 8. *Notices to be given by the Government* may be delivered to the Operator or may be sent by registered mail addressed to the Operator at the mailing address stated in this contract. If mailed, notices are deemed to have been delivered five days after the date of mailing.

ARTICLE 9. *Officials not to benefit.*—No member of or delegate to Congress or resident commissioner shall be admitted to any share or part of this contract or to any benefit that may arise therefrom; but this provision shall not be construed to extend to this contract if made with a corporation for its general benefit.

ARTICLE 10. *Changes and added provisions.*—

.....

.....

.....

.....

.....

.....

Executed in sextuplicate the day and year first above written.

THE UNITED STATES OF AMERICA

Appd. Col. Off.

.....

John J. Harris (Operator)

By .....

By .....

Administrator, Defense Minerals Exploration Administration

.....

I, ..., certify that I am the ..... secretary of the corporation named as Operator herein; that ....., who signed this contract on behalf of the Operator, was then ..... of said corporation; that said contract was duly signed for and in behalf of said corporation by authority of its governing body, and is within the scope of its corporate powers.

.....

[CORPORATE SEAL]

U. S. GOVERNMENT PRINTING OFFICE: 1956—O-383069

EXPLORATION PROJECT CONTRACT
JOHN J. HARRIS
DOCKET NO. DMEA-4888

ANNEX I

The land referred to in Article 2 of the Contract, known as the McHone Mine, is located at an elevation of 3,270 feet on the north slope of the southeast spur of Chalk Mountain, Mitchell County, North Carolina, 1.7 miles S. 49° W. of BM 2518, Spruce Pine, North Carolina. The Operator is the owner of the property, which is more particularly described as follows:

Beginning on a stake in an old line at a black gum stump and locust and running N. 89° W. 56½ poles to a natural set flint rock on top of mountain in Poteat line; thence N. 20° 45' W. with said line 54 poles to a hickory on a large rock, an old corner; thence S. 87° E. 70 poles to a stake and pointers; thence S. 1° 30' E 2 poles and 9 links to a poplar; thence S. 18° E. 24 poles to a stake at an old apple tree; thence S. 4° 45' W. 18½ poles to a poplar on a bank of road; thence S. 18° W. 2 poles to beginning and containing 19 acres, more or less.

S
U
R
N
A
M
E

EXPLORATION PROJECT CONTRACT
JOHN J. HARRIS
DOCKET NO. DMEA-4888

EXHIBIT A

Description of the Work

Exploration for concentrations of strategic mica shall be performed in the area indicated on the attached map entitled, "McHone Mine, Mitchell County, North Carolina, DMEA - 4888 - mica," as follows:

1. Construct:

(a) A toolhouse, minimum dimensions 7 feet by 8 feet by 10 feet.

(b) A powder storage magazine, minimum dimensions 4 feet by 3 feet by 2½ feet.

(c) An exploder storage magazine, minimum dimensions 2 feet by 1½ feet by 1 foot.

The toolhouse may be unfloored; shall be made from unfinished lumber, with protective roof covering; and shall be equipped with lock and key.

The powder and exploder magazines shall be boxed on all sides; shall be made from 2-inch hardwood or 3-inch softwood lumber; and shall be braced at the corners. No metal shall be exposed; and the doors shall be equipped with the equivalent of a 5-tumbler jarproof lock.

2. Prepare a shaft site by driving 8 feet of timbered raise, 5 by 6 feet in cross section in the clear, at approximately 65 degrees, and cut a wedge-shaped rope channel, 3 feet wide, in the back from the portal to the top of the raise.

not clear

3. From the shaft site, sink a two-compartment vertical and/or inclined shaft for a distance of not more than 45 feet.

4. Explore the pegmatite by driving, from or near the bottom of the shaft, drifts and/or crosscuts for a distance of not more than 80 feet.

The shaft and the drifts and/or crosscuts shall be timbered as necessary and shall have minimum cross-sectional dimensions of 5 feet by 7 feet in the clear of timber.

All work shall be performed on the pegmatite or in as close proximity thereto as possible.

The locations, inclinations, directions, and extent of all work are subject to the approval of the Government.

Fixed Unit Costs

1. Construct -	Toolhouse 1/	$76.00	
	Powder magazine 1/	25.00	
	Exploder magazine 1/	15.00	$116.00
2. Prepare a shaft site as follows:			
	Raise - 8 feet @ $20/ft.		$160.00
	Rope channel - 262 cubic feet @ $0.50/cu.ft.		$131.00
3. Sink 45 feet of shaft @ $45/ft.			$2,025.00
4. Drive 80 feet of drifts and/or cross-cuts @ $34/ft.			$2,720.00
Estimated total cost of project			$5,152.00
Government participation @ 75 percent			$3,864.00

1/ The completed work constitutes the unit.

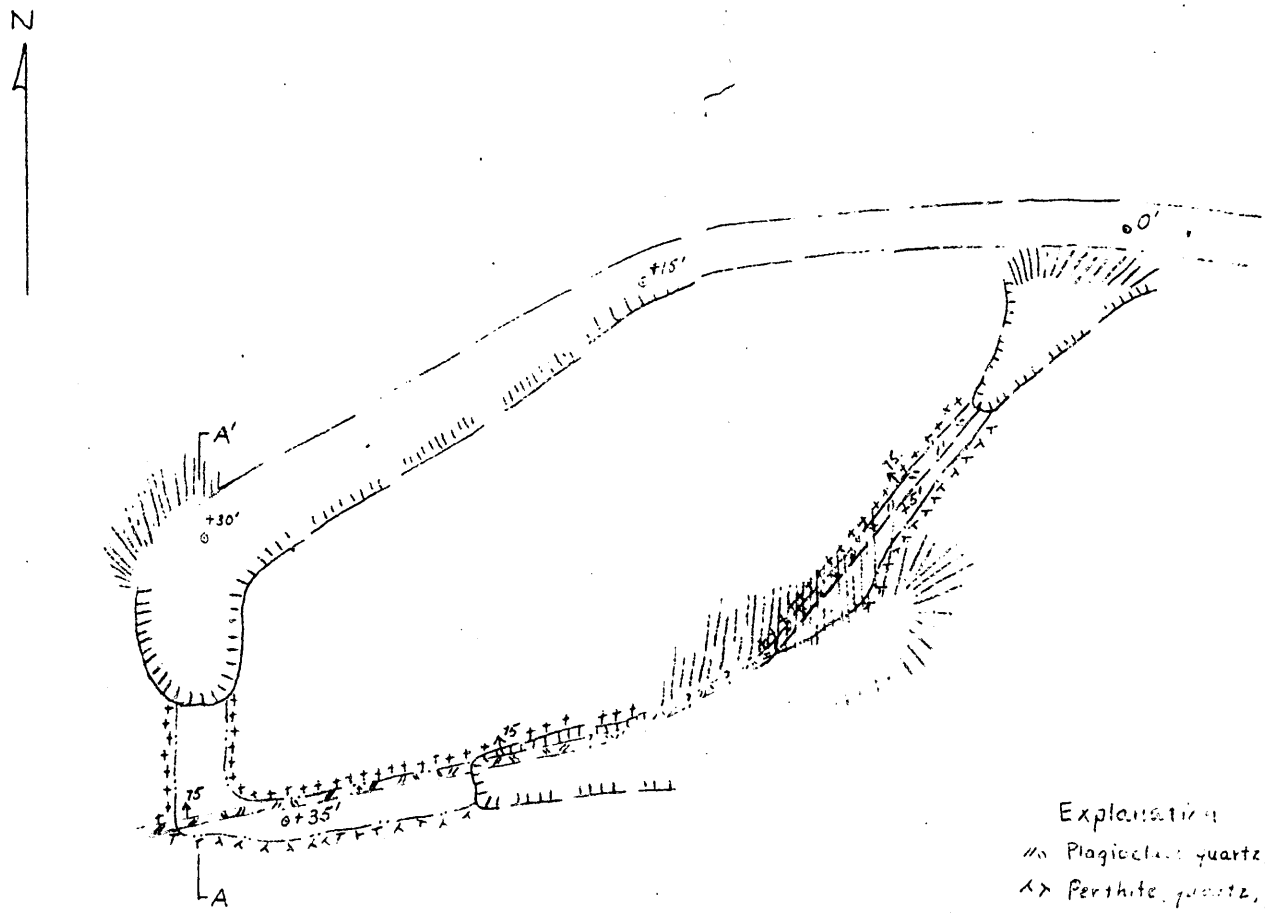

Explanation

Plagioclase, quartz, muscovite zone

Perthite, quartz, plagioclase

"Alaskite"

Mica schist

Wall of open cut

Lower adit & stope

Upper adits

Dump

Contact showing dip

Page & Brunton survey

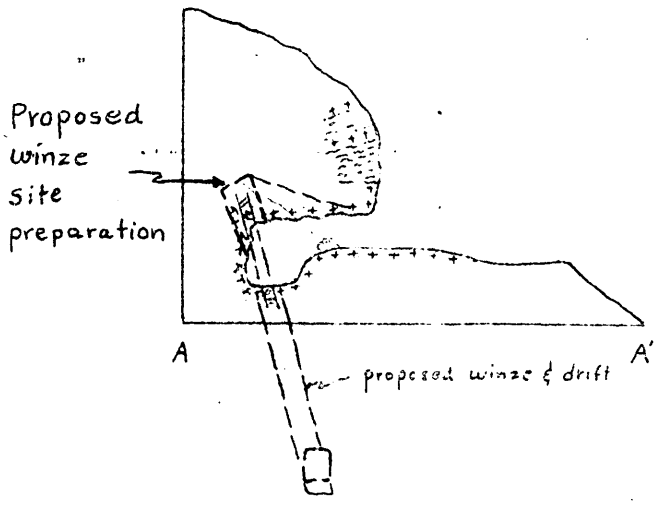

McHone Mine

Mitchell County, North Carolina

DMRA - 4888 - mica

Scale

0 20 40 feet

Operator's copy

MF-200A
(Rev. April 1956)

UNITED STATES OF AMERICA
DEPARTMENT OF THE INTERIOR
DEFENSE MINERALS EXPLORATION ADMINISTRATION
EXPLORATION PROJECT CONTRACT
(Short Form)

DMEA No.	*Commodity*	*Contract No. Idm–E*	*County*	*State*
4888	Mica		Mitchell	North Carolina

It is agreed ....., between the United States of America, acting through the Department of the Interior, Defense Minerals Exploration Administration, hereinafter called the "Government," and John J. Harris

whose mailing address is Route #1
Marion, North Carolina
hereinafter called the "Operator," as follows:

ARTICLE 1. *Authority and project.*—(a) This contract is entered into under the authority of the Defense Production Act of 1950, as amended. It consists of this form (MF–200A), the attached Annex I (land description), Exhibit A (work and costs), and the maps and documents listed therein. The project work is a search for indicated or undeveloped deposits of the commodity designated above. The Operator shall begin the work on or before ....., and, subject to the provisions of Article 7 and Exhibit A, shall complete the work within 8 months from the date of the contract.

(b) The description of the work and the fixed cost for each unit of work to be performed (per foot of drilling, per foot of drifting, per hour of operations, etc.) are hereby agreed upon as specified in Exhibit A. The estimated total cost of the project work is $5,152.00. The Government will contribute 75 percent of the fixed unit cost of the work performed, not exceeding $3,864.00, in accordance with the provisions of Articles 4 and 5.

(c) The Operator shall not transfer or assign this contract or any right or obligation thereunder without the written consent of the Government.

ARTICLE 2. *Operator's property rights.*—(a) The Operator represents and undertakes that Annex I correctly describes the land which is the subject of this contract and the nature of the Operator's rights of property and possession therein (whether as owner, lessee, or otherwise), and that such right, title, or interest is subject only to the following claims, liens, or encumbrances: None

(b) The Subordination Agreement of the holder of any claim, lien, or encumbrance listed above and (if the Operator does not hold the legal title) the Consent to Lien of any holder of the legal title of the land (lessor, seller, optionor, etc.) are attached, as follows: .....

(c) The Operator shall preserve and maintain his right, title, and interest in the land and his right to the possession thereof for the purposes of this contract, and shall devote the land and all existing improvements, facilities, buildings, installations, and appurtenances to the purposes of this contract. The Operator shall neither transfer, convey, nor surrender the land nor any right, title, or interest therein, nor permit nor suffer any claim, lien, or encumbrance thereon, without expressly referring to and providing

in the instrument of conveyance, lien, or encumbrance for the preservation of the Government's right to a percentage royalty on production and lien for the payment thereof. Two copies of such instrument shall be furnished to the Government. If the Government's rights to royalty as provided in Article 6 have been terminated, the provisions of this paragraph (c) shall become inapplicable.

ARTICLE 3. *Performance of the work.*—(a) Operator's responsibility.—The work shall be performed diligently, efficiently, expertly, in a workmanlike manner, and in accordance with good mining standards and State regulations governing health, safety, and liability insurance covering employment. The Operator shall provide suitable and adequate equipment, facilities, materials, supplies, and labor to complete the work, as specified in Article 1 (a).

(b) *Government may inspect.*—The Operator shall consult with and inform the Government on all phases of the work as it progresses. The Government may enter at all reasonable times to inspect the work under the contract, and also after certification of discovery or development, to inspect production operations and underground workings. The Operator shall provide the Government with all reasonable means of access for such inspections.

ARTICLE 4. *Contribution by the Government.*—The Government will make its contribution on the basis of the monthly vouchers referred to in Article 5 (b); but all payments by the Government are provisional only, subject to audit, and until the account between the Operator and the Government is finally audited and settled and the Operator's final report has been rendered, the Government may withhold such sums as it sees fit but not in excess of 10 percent of the estimated total cost of the work. To the extent that excesses over fixed unit costs or any excess over the estimated total cost may be necessary for the performance of the work, the Operator shall incur and pay such excesses for his own account without contribution by the Government. The Government will not contribute to the cost of any work performed prior to the date of this contract. The Government may make payments for the account of the Operator directly to independent contractors and suppliers rather than to the Operator.

ARTICLE 5. *Reports, accounts, audits.*—(a) Operator's records.—The Operator shall keep suitable records and accounts of the units of work performed and of any production in which the Government may have an interest; and shall preserve those with respect to work performed for at least three years after final payment by the Government, and those with respect to production for at least three years after any obligation to pay royalties to the Government has terminated. The Government may inspect and audit said records and accounts at any time, either by itself or by a certified public accountant. The Comptroller General of the United States or his representative, until the expiration of said three-year periods, shall have access to and the right to examine all pertinent books, documents, papers, and records of the Operator.

(b) *Progress reports and vouchers.*—The Operator shall provide the Government with five copies of monthly progress reports in three sections as follows: (1) Operator's Monthly Report and Voucher showing a detailed statement of units of work performed during the reporting period; (2) Operator's Unit Cost and Progress Report showing the various types of work performed during the reporting period and the fixed unit costs incurred for each type of work; and (3) a Narrative Report of the work performed during the reporting period including adequate engineering-geological maps or sketches, drill hole logs and locations, and assay reports on samples taken concurrently with advance in mineralized ground. (Forms for reporting under (1) and (2) above will be provided by the Government.)

(c) *Final report.*—Upon completion of the work or termination of the Government's obligation to contribute to costs, the Operator shall furnish the Government with five copies of a final report (in addition to the final progress report and voucher). This final report shall include a geological and engineering evaluation of the results of the work performed under the contract with an estimate of the ore reserves resulting from such work, complete assay data, adequate geological and engineering maps or sketches, and a summary of the work performed and the unit costs thereof.

(d) *Report of sales.*—The Operator shall provide the Government with suitable accounting and documentary evidence covering all production to which the Government's percentage royalty relates, such as copies of smelter or concentrator settlement sheets, and certified accounts of production and sale or other disposition of production.

(e) *Compliance with requirements.*—If in the opinion of the Government any of the Operator's reports, records, or accounts are insufficient or incomplete, or if the Operator fails to make them, the Government may procure the making or completion of such with suitable attachments as an expense of the work to which the Operator shall contribute. The Government may withhold approval and payment of any vouchers relating to insufficient or incomplete reports, records, or accounts.

ARTICLE 6. *Repayment by Operator.*—(a) *Certification.*—If the Government considers that a discovery or development from which production may be made has resulted from the work, the Government, at any time not later than six months after the Operator has rendered a sufficient final report (see Article 5), may so certify in writing to the Operator. Such certification shall describe broadly or indicate the nature of the discovery or development.

(b) *Royalty on production.*—The Operator, as principal if the Operator is the producer or as surety if the Operator is not the producer (for example, if the Operator either transfers or fails to retain his interest in the land), shall pay to the Government a royalty on all minerals mined or produced from the land, as follows: (1) regardless of any certification of discovery or development, from the date of the contract until the lapse of the time within which the Government may make such certification or until the total net amount contributed by the Government without interest is fully repaid, whichever occurs first; or (2) if the Government makes a certification of discovery or development, for a period of ten years from the date of the contract or until the total net amount contributed by the Government without interest is fully repaid, whichever occurs first.

(c) *Basis for computation.*—The Government's royalty shall be a percentage of the gross proceeds (including any bonuses, premiums, allowances, or other benefits) from the production sold, in the form sold (ore, concentrates, metal, or equivalent), at the point of delivery (the f. o. b. point); *except,* that charges of *the buyer* arising in the regular course of business, and shown as deductions on the buyer's settlement sheets, on account of the cost of treatment processes performed by *the buyer,* sampling and assaying to determine the value of the production sold, and freight paid by *the buyer* to a carrier (not the Operator), shall be allowed as deductions in arriving at the "gross proceeds" as that term is used herein. Any costs of treatment processes, sampling, assaying, or transportation performed or paid by the Operator or by anyone other than the buyer are not deductible in arriving at the "gross proceeds" as that term is here used. The term "treatment processes," as here used, means those processes (such as milling, concentrating, smelting, refining, or equivalent, but excluding fabricating or manufacturing) applied to the crude ore or other production after it is extracted from the ground to put it into a commercially marketable form.

(d) *Unsold production.*—If any production (ore, concentrates, metal, or equivalent) after the lapse of six months from the date the ore was extracted from the ground remains neither sold nor used by the Operator in integrated manufacturing or fabricating operations (for instance, if it is stockpiled), the Government, at its option, as long as it so remains, may require the computation and payment of its royalty on the value of such production in the form (ore, concentrates, metal, or equivalent) it is in when the Government elects to require computation and payment. If any production is used by the Operator in integrated manufacturing or fabricating operations before the Government makes its election, the Government's royalty on such production shall be computed on the value thereof in the form in which and at the time it is so used. "Value" as here used means what is or would be gross income from mining operations for percentage depletion purposes in Federal income tax determination, or the market value, whichever is greater.

(e) *Percentages of royalty.*—The percentages of the Government's royalty shall be as follows:

One and one-half (1½) percent of amounts ("gross proceeds" or "value") not in excess of eight dollars ($8.00) per ton of production in the form in which sold, held, or used, plus one-half (½) percent for each additional full fifty cents ($0.50) by which such amounts exceed eight dollars ($8.00) per ton, but not in excess of five (5) percent of such amounts.

(For instance: the royalty on an amount of five dollars ($5.00) per ton would be one and one-half (1½) percent; on an amount of ten dollars ($10.00) per ton, three and one-half (3½) percent.)

(f) *Time for computation and payment.*—The Government's royalty shall be computed and paid currently upon each lot sold, held, or used in integrated operations, as the case may be, as above provided in this Article.

(g) *Lien for payment.*—To secure the payment of its percentage royalty, there is hereby granted to the Government a lien upon the land or the Operator's interest in the land and upon any production of minerals therefrom until the royalty claim is extinguished by lapse of time or is fully paid.

(h) *Notice to purchasers.*—The Operator shall give notice of the Government's claim for royalty to any purchaser of the production, and shall authorize and direct such purchaser to pay the royalty directly to the Government and to furnish the Government with copies of the settlement sheets. If the records of any production and sales or other disposition of production, whether the production is by the Operator or by others, are not made available to the Government, the amount of the royalty may be estimated by the Administrator, Defense Minerals Exploration Administration, or his successor, and his estimate thereof shall be final and binding upon the Operator.

(i) *No obligation to produce.*—Nothing in this contract is to be construed as imposing any obligation on the Operator or the Operator's successor in interest to engage in any production operations.

(j) *Government not obligated to buy.*—Nothing in this contract shall be construed as imposing any obligation on the Government to purchase any minerals mined or produced from the land.

ARTICLE 7. *Termination of the Government's obligations.*—(a) If in the opinion of the Government operations at any time have failed to achieve anticipated results that indicate the probability of making a worthwhile discovery and in the opinion of the Government further operations are not justified, the Government may give the Operator written notice thereof, and thereupon the Government shall be free of all obligation to pay on account of units of work not then performed, and the Operator shall be free of all further obligation to prosecute the work other than such as may be necessary and incidental to winding up, reporting, and accounting.

(b) If in the opinion of the Government the Operator is in any manner in default under the terms of the contract, the Government may give the Operator written notice of such default with a specification of reasonable time within which the default must be cured; and if the Operator fails to cure such default as required, thereupon the Government shall be relieved of all obligation to pay on account of units of work not performed when the notice was given, and the Operator shall be free of all obligation to prosecute the work other than such as may be necessary and incidental to winding up, reporting, and accounting. The Government may also avail itself of any other remedy the law may provide for breach of contract, including the right to rescind the contract and to demand repayment of all moneys contributed by the Government under the contract.

(c) The giving of any notice by the Government under the provisions of this Article 7 shall not affect the Government's rights as provided for in the contract with respect to a percentage royalty, and liens to secure the payment thereof, and such rights shall be fully preserved.

ARTICLE 8. *Notices to be given by the Government* may be delivered to the Operator or may be sent by registered mail addressed to the Operator at the mailing address stated in this contract. If mailed, notices are deemed to have been delivered five days after the date of mailing.

ARTICLE 9. *Officials not to benefit.*—No member of or delegate to Congress or resident commissioner shall be admitted to any share or part of this contract or to any benefit that may arise therefrom; but this provision shall not be construed to extend to this contract if made with a corporation for its general benefit.

ARTICLE 10. *Changes and added provisions.*—

.....

.....

.....

.....

.....

.....

Executed in sextuplicate the day and year first above written.

THE UNITED STATES OF AMERICA

.....

John J. Harris (Operator)

By .....

Administrator, Defense Minerals Exploration Administration

By .....

.....

I, ..., certify that I am the ..... secretary of the corporation named as Operator herein; that ....., who signed this contract on behalf of the Operator, was then ..... of said corporation; that said contract was duly signed for and in behalf of said corporation by authority of its governing body, and is within the scope of its corporate powers.

.....

[CORPORATE SEAL]

U. S. GOVERNMENT PRINTING OFFICE: 1956—O-383069

EXPLORATION PROJECT CONTRACT
JOHN J. HARRIS
DOCKET NO. DMEA-4888

ANNEX I

The land referred to in Article 2 of the Contract, known as the McHone Mine, is located at an elevation of 3,270 feet on the north slope of the southeast spur of Chalk Mountain, Mitchell County, North Carolina, 1.7 miles S. 49° W. of RR 2516, Spruce Pine, North Carolina. The Operator is the owner of the property, which is more particularly described as follows:

Beginning on a stake in an old line at a black gum stump and locust and running N. 89° W. 56½ poles to a natural set flint rock on top of mountain in Poteat line; thence N. 26° 45' W. with said line 54 poles to a hickory on a large rock, an old corner; thence S. 87° E. 70 poles to a stake and pointers; thence S. 1° 30' E. 2 poles and 9 links to a poplar; thence S. 18° E. 24 poles to a stake at an old apple tree; thence S. 4° 45' W. 18½ poles to a poplar on a bank of road; thence S. 18° W. 2 poles to beginning and containing 19 acres, more or less.

EXPLORATION PROJECT CONTRACT
JOHN J. HARRIS
DOCKET NO. DMEA-4888

EXHIBIT A

Description of the Work

Exploration for concentrations of strategic mica shall be performed in the area indicated on the attached map entitled, "McBone Mine, Mitchell County, North Carolina, DMEA - 4888 - mica," as follows:

1. Construct:

(a) A toolhouse, minimum dimensions 7 feet by 8 feet by 10 feet.

(b) A powder storage magazine, minimum dimensions 4 feet by 3 feet by 2½ feet.

(c) An exploder storage magazine, minimum dimensions 2 feet by 1½ feet by 1 foot.

The toolhouse may be unfloored; shall be made from unfinished lumber, with protective roof covering; and shall be equipped with lock and key.

The powder and exploder magazines shall be boxed on all sides; shall be made from 2-inch hardwood or 3-inch softwood lumber; and shall be braced at the corners. No metal shall be exposed; and the doors shall be equipped with the equivalent of a 3-tumbler jarproof lock.

2. Prepare a shaft site by driving 8 feet of timbered raise, 5 by 6 feet in cross section in the clear, at approximately 65 degrees, and cut a wedge-shaped rope channel, 3 feet wide, in the back from the portal to the top of the raise.

3. From the shaft site, sink a two-compartment vertical and/or inclined shaft for a distance of not more than 45 feet.

4. Explore the pegmatite by driving, from or near the bottom of the shaft, drifts and/or crosscuts for a distance of not more than 50 feet.

The shaft and the drifts and/or crosscuts shall be timbered as necessary and shall have minimum cross-sectional dimensions of 5 feet by 7 feet in the clear of timber.

All work shall be performed on the pegmatite or in as close proximity thereto as possible.

The locations, inclinations, directions, and extent of all work are subject to the approval of the Government.

Fixed Unit Costs

1. Construct - Toolhouse 1/		$76.00	
Footer machine 1/		25.00	
Exploder machine 1/		15.00	$116.00
2. Prepare a shaft site as follows:			
Raise - 8 feet @ $20/ft.			$160.00
Rope channel - 500 cubic feet @ $0.38/cu.ft.			$131.00
3. Sink 45 feet of shaft @ $45/ft.			$2,025.00
4. Drive 50 feet of drifts and/or crosscuts @ $34/ft.			$1,700.00
Estimated total cost of project			$5,152.00
Government participation @ 75 percent			$3,864.00

1/ The completed work constitutes the unit.

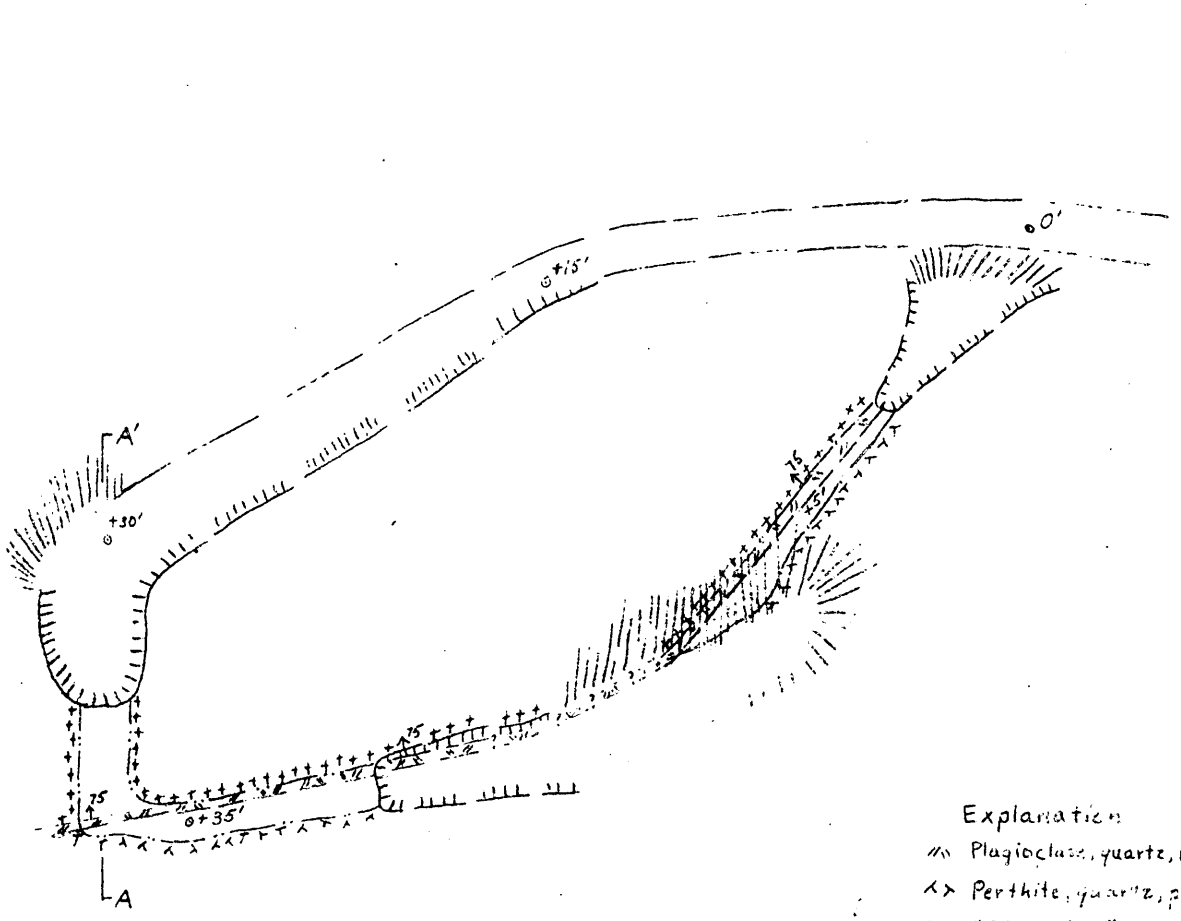

Explanation

- Plagioclase, quartz, muscovite zone
- Perthite, quartz, plagioclase
- "Alaskite"
- Mica schist
- Wall of open cut
- Lower adit & stope
- Upper adits
- Dump
- +15' Spot elevations
- Contact showing dip

Tape & Brunton survey

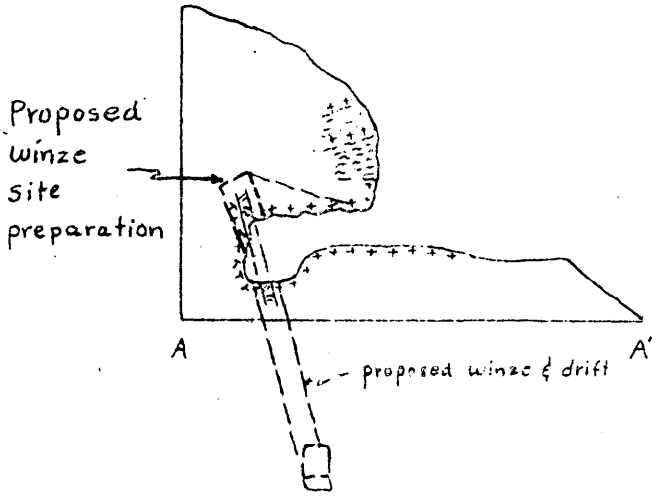

Mc Home Mine

Mitchell County, North Carolina

DMEA - 4888 - mica

Scale

0 20 40 feet

Finance Office's copy

MF-200A
(Rev. April 1956)

UNITED STATES OF AMERICA
DEPARTMENT OF THE INTERIOR
DEFENSE MINERALS EXPLORATION ADMINISTRATION
EXPLORATION PROJECT CONTRACT
(Short Form)

DMEA No.	*Commodity*	*Contract No.* *Idm–E*	*County*	*State*
4888	Mica		Mitchell	North Carolina

It is agreed ....., between the United States of America, acting through the Department of the Interior, Defense Minerals Exploration Administration, hereinafter called the "Government," and John J. Harris

whose mailing address is Route #1
Marion, North Carolina
hereinafter called the "Operator," as follows:

ARTICLE 1. *Authority and project.*—(a) This contract is entered into under the authority of the Defense Production Act of 1950, as amended. It consists of this form (MF–200A), the attached Annex I (land description), Exhibit A (work and costs), and the maps and documents listed therein. The project work is a search for indicated or undeveloped deposits of the commodity designated above. The Operator shall begin the work on or before ....., and, subject to the provisions of Article 7 and Exhibit A, shall complete the work within 8 months from the date of the contract.

(b) The description of the work and the fixed cost for each unit of work to be performed (per foot of drilling, per foot of drifting, per hour of operations, etc.) are hereby agreed upon as specified in Exhibit A. The estimated total cost of the project work is $5,152.00. The Government will contribute 75 percent of the fixed unit cost of the work performed, not exceeding $3,864.00, in accordance with the provisions of Articles 4 and 5.

(c) The Operator shall not transfer or assign this contract or any right or obligation thereunder without the written consent of the Government.

ARTICLE 2. *Operator's property rights.*—(a) The Operator represents and undertakes that Annex I correctly describes the land which is the subject of this contract and the nature of the Operator's rights of property and possession therein (whether as owner, lessee, or otherwise), and that such right, title, or interest is subject only to the following claims, liens, or encumbrances: None

(b) The Subordination Agreement of the holder of any claim, lien, or encumbrance listed above and (if the Operator does not hold the legal title) the Consent to Lien of any holder of the legal title of the land (lessor, seller, optionor, etc.) are attached, as follows: .....

(c) The Operator shall preserve and maintain his right, title, and interest in the land and his right to the possession thereof for the purposes of this contract, and shall devote the land and all existing improvements, facilities, buildings, installations, and appurtenances to the purposes of this contract. The Operator shall neither transfer, convey, nor surrender the land nor any right, title, or interest therein, nor permit nor suffer any claim, lien, or encumbrance thereon, without expressly referring to and providing

in the instrument of conveyance, lien, or encumbrance for the preservation of the Government's right to a percentage royalty on production and lien for the payment thereof. Two copies of such instrument shall be furnished to the Government. If the Government's rights to royalty as provided in Article 6 have been terminated, the provisions of this paragraph (c) shall become inapplicable.

ARTICLE 3. *Performance of the work.*—(a) Operator's responsibility.—The work shall be performed diligently, efficiently, expertly, in a workmanlike manner, and in accordance with good mining standards and State regulations governing health, safety, and liability insurance covering employment. The Operator shall provide suitable and adequate equipment, facilities, materials, supplies, and labor to complete the work, as specified in Article 1 (a).

(b) *Government may inspect.*—The Operator shall consult with and inform the Government on all phases of the work as it progresses. The Government may enter at all reasonable times to inspect the work under the contract, and also after certification of discovery or development, to inspect production operations and underground workings. The Operator shall provide the Government with all reasonable means of access for such inspections.

ARTICLE 4. *Contribution by the Government.*—The Government will make its contribution on the basis of the monthly vouchers referred to in Article 5 (b); but all payments by the Government are provisional only, subject to audit, and until the account between the Operator and the Government is finally audited and settled and the Operator's final report has been rendered, the Government may withhold such sums as it sees fit but not in excess of 10 percent of the estimated total cost of the work. To the extent that excesses over fixed unit costs or any excess over the estimated total cost may be necessary for the performance of the work, the Operator shall incur and pay such excesses for his own account without contribution by the Government. The Government will not contribute to the cost of any work performed prior to the date of this contract. The Government may make payments for the account of the Operator directly to independent contractors and suppliers rather than to the Operator.

ARTICLE 5. *Reports, accounts, audits.*—(a) Operator's records.—The Operator shall keep suitable records and accounts of the units of work performed and of any production in which the Government may have an interest; and shall preserve those with respect to work performed for at least three years after final payment by the Government, and those with respect to production for at least three years after any obligation to pay royalties to the Government has terminated. The Government may inspect and audit said records and accounts at any time, either by itself or by a certified public accountant. The Comptroller General of the United States or his representative, until the expiration of said three-year periods, shall have access to and the right to examine all pertinent books, documents, papers, and records of the Operator.

(b) *Progress reports and vouchers.*—The Operator shall provide the Government with five copies of monthly progress reports in three sections as follows: (1) Operator's Monthly Report and Voucher showing a detailed statement of units of work performed during the reporting period; (2) Operator's Unit Cost and Progress Report showing the various types of work performed during the reporting period and the fixed unit costs incurred for each type of work; and (3) a Narrative Report of the work performed during the reporting period including adequate engineering-geological maps or sketches, drill hole logs and locations, and assay reports on samples taken concurrently with advance in mineralized ground. (Forms for reporting under (1) and (2) above will be provided by the Government.)

(c) *Final report.*—Upon completion of the work or termination of the Government's obligation to contribute to costs, the Operator shall furnish the Government with five copies of a final report (in addition to the final progress report and voucher). This final report shall include a geological and engineering evaluation of the results of the work performed under the contract with an estimate of the ore reserves resulting from such work, complete assay data, adequate geological and engineering maps or sketches, and a summary of the work performed and the unit costs thereof.

(d) *Report of sales.*—The Operator shall provide the Government with suitable accounting and documentary evidence covering all production to which the Government's percentage royalty relates, such as copies of smelter or concentrator settlement sheets, and certified accounts of production and sale or other disposition of production.

(e) *Compliance with requirements.*—If in the opinion of the Government any of the Operator's reports, records, or accounts are insufficient or incomplete, or if the Operator fails to make them, the Government may procure the making or completion of such with suitable attachments as an expense of the work to which the Operator shall contribute. The Government may withhold approval and payment of any vouchers relating to insufficient or incomplete reports, records, or accounts.

ARTICLE 6. *Repayment by Operator.*—(a) *Certification.*—If the Government considers that a discovery or development from which production may be made has resulted from the work, the Government, at any time not later than six months after the Operator has rendered a sufficient final report (see Article 5), may so certify in writing to the Operator. Such certification shall describe broadly or indicate the nature of the discovery or development.

(b) *Royalty on production.*—The Operator, as principal if the Operator is the producer or as surety if the Operator is not the producer (for example, if the Operator either transfers or fails to retain his interest in the land), shall pay to the Government a royalty on all minerals mined or produced from the land, as follows: (1) regardless of any certification of discovery or development, from the date of the contract until the lapse of the time within which the Government may make such certification or until the total net amount contributed by the Government without interest is fully repaid, whichever occurs first; or (2) if the Government makes a certification of discovery or development, for a period of ten years from the date of the contract or until the total net amount contributed by the Government without interest is fully repaid, whichever occurs first.

(c) *Basis for computation.*—The Government's royalty shall be a percentage of the gross proceeds (including any bonuses, premiums, allowances, or other benefits) from the production sold, in the form sold (ore, concentrates, metal, or equivalent), at the point of delivery (the f. o. b. point); *except,* that charges of *the buyer* arising in the regular course of business, and shown as deductions on the buyer's settlement sheets, on account of the cost of treatment processes performed by *the buyer,* sampling and assaying to determine the value of the production sold, and freight paid by *the buyer* to a carrier (not the Operator), shall be allowed as deductions in arriving at the "gross proceeds" as that term is used herein. Any costs of treatment processes, sampling, assaying, or transportation performed or paid by the Operator or by anyone other than the buyer are not deductible in arriving at the "gross proceeds" as that term is here used. The term "treatment processes," as here used, means those processes (such as milling, concentrating, smelting, refining, or equivalent, but excluding fabricating or manufacturing) applied to the crude ore or other production after it is extracted from the ground to put it into a commercially marketable form.

(d) *Unsold production.*—If any production (ore, concentrates, metal, or equivalent) after the lapse of six months from the date the ore was extracted from the ground remains neither sold nor used by the Operator in integrated manufacturing or fabricating operations (for instance, if it is stockpiled), the Government, at its option, as long as it so remains, may require the computation and payment of its royalty on the value of such production in the form (ore, concentrates, metal, or equivalent) it is in when the Government elects to require computation and payment. If any production is used by the Operator in integrated manufacturing or fabricating operations before the Government makes its election, the Government's royalty on such production shall be computed on the value thereof in the form in which and at the time it is so used. "Value" as here used means what is or would be gross income from mining operations for percentage depletion purposes in Federal income tax determination, or the market value, whichever is greater.

(e) *Percentages of royalty.*—The percentages of the Government's royalty shall be as follows:

One and one-half (1½) percent of amounts ("gross proceeds" or "value") not in excess of eight dollars ($8.00) per ton of production in the form in which sold, held, or used, plus one-half (½) percent for each additional full fifty cents ($0.50) by which such amounts exceed eight dollars ($8.00) per ton, but not in excess of five (5) percent of such amounts.

(For instance: the royalty on an amount of five dollars ($5.00) per ton would be one and one-half (1½) percent; on an amount of ten dollars ($10.00) per ton, three and one-half (3½) percent.)

(f) *Time for computation and payment.*—The Government's royalty shall be computed and paid currently upon each lot sold, held, or used in integrated operations, as the case may be, as above provided in this Article.

(g) *Lien for payment.*—To secure the payment of its percentage royalty, there is hereby granted to the Government a lien upon the land or the Operator's interest in the land and upon any production of minerals therefrom until the royalty claim is extinguished by lapse of time or is fully paid.

(h) *Notice to purchasers.*—The Operator shall give notice of the Government's claim for royalty to any purchaser of the production, and shall authorize and direct such purchaser to pay the royalty directly to the Government and to furnish the Government with copies of the settlement sheets. If the records of any production and sales or other disposition of production, whether the production is by the Operator or by others, are not made available to the Government, the amount of the royalty may be estimated by the Administrator, Defense Minerals Exploration Administration, or his successor, and his estimate thereof shall be final and binding upon the Operator.

(i) *No obligation to produce.*—Nothing in this contract is to be construed as imposing any obligation on the Operator or the Operator's successor in interest to engage in any production operations.

(j) *Government not obligated to buy.*—Nothing in this contract shall be construed as imposing any obligation on the Government to purchase any minerals mined or produced from the land.

ARTICLE 7. *Termination of the Government's obligations.*—(a) If in the opinion of the Government operations at any time have failed to achieve anticipated results that indicate the probability of making a worthwhile discovery and in the opinion of the Government further operations are not justified, the Government may give the Operator written notice thereof, and thereupon the Government shall be free of all obligation to pay on account of units of work not then performed, and the Operator shall be free of all further obligation to prosecute the work other than such as may be necessary and incidental to winding up, reporting, and accounting.

(b) If in the opinion of the Government the Operator is in any manner in default under the terms of the contract, the Government may give the Operator written notice of such default with a specification of reasonable time within which the default must be cured; and if the Operator fails to cure such default as required, thereupon the Government shall be relieved of all obligation to pay on account of units of work not performed when the notice was given, and the Operator shall be free of all obligation to prosecute the work other than such as may be necessary and incidental to winding up, reporting, and accounting. The Government may also avail itself of any other remedy the law may provide for breach of contract, including the right to rescind the contract and to demand repayment of all moneys contributed by the Government under the contract.

(c) The giving of any notice by the Government under the provisions of this Article 7 shall not affect the Government's rights as provided for in the contract with respect to a percentage royalty, and liens to secure the payment thereof, and such rights shall be fully preserved.

ARTICLE 8. *Notices to be given by the Government* may be delivered to the Operator or may be sent by registered mail addressed to the Operator at the mailing address stated in this contract. If mailed, notices are deemed to have been delivered five days after the date of mailing.

ARTICLE 9. *Officials not to benefit.*—No member of or delegate to Congress or resident commissioner shall be admitted to any share or part of this contract or to any benefit that may arise therefrom; but this provision shall not be construed to extend to this contract if made with a corporation for its general benefit.

ARTICLE 10. *Changes and added provisions.*—

.....

.....

.....

.....

.....

.....

Executed in sextuplicate the day and year first above written.

THE UNITED STATES OF AMERICA

.....
(Operator)

John J. Harris

By .....

By .....

Administrator, Defense Minerals Exploration Administration

.....

I, ..., certify that I am the ..... secretary of the corporation named as Operator herein; that ....., who signed this contract on behalf of the Operator, was then ..... of said corporation; that said contract was duly signed for and in behalf of said corporation by authority of its governing body, and is within the scope of its corporate powers.

.....

[CORPORATE SEAL]

U. S. GOVERNMENT PRINTING OFFICE: 1956—O-383069

[illegible] PROPERTY CONTRACT
[illegible] [illegible]
[illegible] NO. [illegible]

[illegible]

The land referred to in Article 2 of the Contract, known as the [illegible] Mine, is located at an elevation of [illegible] feet at the north slope of the northeast spur of [illegible] Mountain, [illegible] County, North Carolina, 1.7 miles N. 40° W. of the [illegible], Burnsville, North Carolina. The Operator is the owner of the property, which is more particularly described as follows:

Beginning on a stake in an old line at a black gum stump and [illegible] and running N. 50° W. 164 poles to a natural out cliff rock on top of mountain in [illegible] line; thence N. 40° 45' W. with said line 84 poles to a [illegible] on a large rock, an old corner; thence S. 5° E. 70 poles to a stake and pointers; thence S. 1° 30' E 2 poles and 9 links to a poplar; thence S. 10° E. 84 poles to a stake at an old apple tree; thence S. 45° E. 104 poles to a poplar on a bank of rock; thence S. 15° E. 2 poles to beginning and containing 19 acres, more or less.

[illegible]
[illegible]
[illegible]

[illegible]

[illegible]

[illegible]

Magazines for concentrations of explosive when shall be provided in the area indicated on the attached [illegible] map, Mitchell County, North Carolina, [illegible] dated [illegible], as follows:

1. Generally:

(a) A magazine, minimum dimensions 7 feet by 8 feet by 10 feet.

(b) A powder storage magazine, minimum dimensions 4 feet by 3 feet by 2½ feet.

(c) An exploder storage magazine, minimum dimensions 2 feet by 2½ feet by 3 feet.

The walls and floors shall be made from unfinished lumber, with protective roof coverings and shall be equipped with lock and key.

The powder and exploder magazines shall be based on all sides, shall be made from 4-inch hardwood or 3-inch softwood lumber and shall be placed at the perimeter. The cabin shall be disposed, and the doors shall be equipped with the equivalent of a 3-number fireproof lock.

2. Prepare a shaft site by driving 8 rows of [illegible] poles, 5 by 5 feet in cross section in the shape, as approximately 30 degrees, and set a wedge-shaped [illegible] channel, 3 feet wide, in the hole from the center of the way of the poles.

3. From the main [illegible] construct a temporary [illegible] vertical and/or vertical [illegible] a distance of not more than [illegible] feet.

4. Remove the deposits by dredging from or near to the [illegible] of the [illegible] channel and/or reservoir for a distance of not more than [illegible] feet.

The dam and the [illegible] and/or reservoir shall be [illegible] as necessary and shall have minimum [illegible] [illegible] of 3 feet by 7 feet in the place of [illegible].

All work shall be performed in the respective or in an [illegible] [illegible] [illegible].

The [illegible], [illegible], [illegible], and patent of all work [illegible] shall be the property of the Government.

Cost Estimate

1. Construct - Tailrace [illegible] $[illegible]
   Forest [illegible] [illegible]
   Exterior [illegible] [illegible] $[illegible]

2. Prepare a [illegible] [illegible] as follows:
   Inlet - [illegible] feet [illegible] $[illegible]
   Main channel - [illegible] feet @ $0.50/cu.ft. $[illegible]

3. Place [illegible] feet of [illegible] @ [illegible]/ft. $[illegible]

4. Drill [illegible] feet of drift and/or cross-cut @ [illegible]/ft. [illegible]

   Estimated total cost of project $[illegible]

   Government participation @ 75 percent $[illegible]

1/ The complete work constitutes the unit.

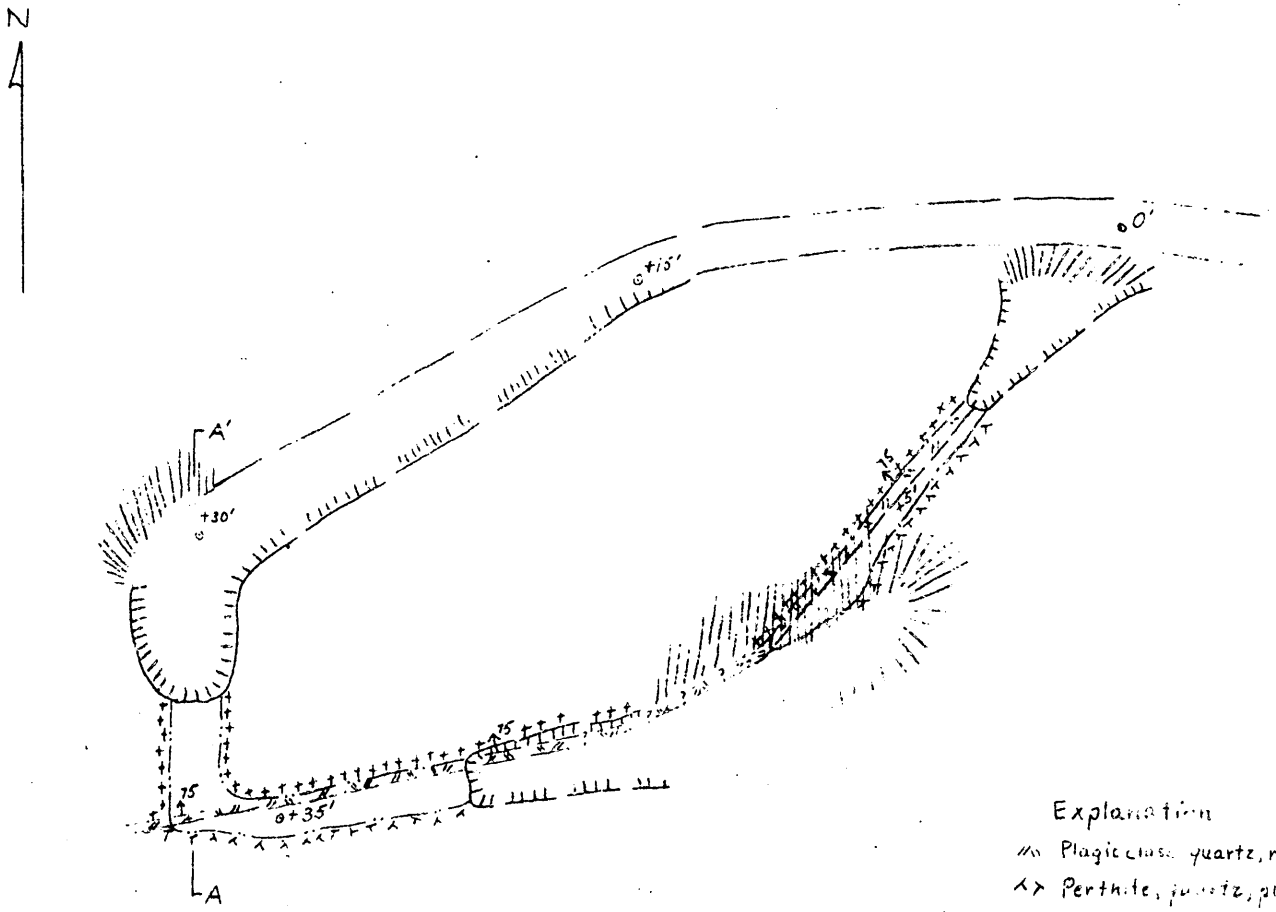

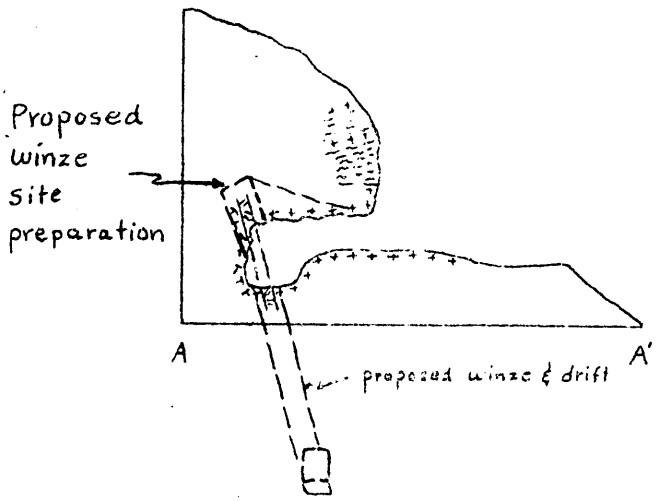

McHone Mine

Mitchell County, North Carolina

DMEA - 4888 - mica

Scale

0 20 40 feet

Field Team's copy

MF-200A
(Rev. April 1956)

UNITED STATES OF AMERICA
DEPARTMENT OF THE INTERIOR
DEFENSE MINERALS EXPLORATION ADMINISTRATION
EXPLORATION PROJECT CONTRACT
(Short Form)

DMEA No.	*Commodity*	*Contract No. Idm–E*	*County*	*State*
4888	Mica		Mitchell	North Carolina

It is agreed ....., between the United States of America, acting through the Department of the Interior, Defense Minerals Exploration Administration, hereinafter called the "Government," and John J. Harris

whose mailing address is Route #1
Marion, North Carolina
hereinafter called the "Operator," as follows:

ARTICLE 1. *Authority and project.*—(a) This contract is entered into under the authority of the Defense Production Act of 1950, as amended. It consists of this form (MF–200A), the attached Annex I (land description), Exhibit A (work and costs), and the maps and documents listed therein. The project work is a search for indicated or undeveloped deposits of the commodity designated above. The Operator shall begin the work on or before ....., and, subject to the provisions of Article 7 and Exhibit A, shall complete the work within 8 months from the date of the contract.

(b) The description of the work and the fixed cost for each unit of work to be performed (per foot of drilling, per foot of drifting, per hour of operations, etc.) are hereby agreed upon as specified in Exhibit A. The estimated total cost of the project work is $5,152.00. The Government will contribute 75 percent of the fixed unit cost of the work performed, not exceeding $3,864.00, in accordance with the provisions of Articles 4 and 5.

(c) The Operator shall not transfer or assign this contract or any right or obligation thereunder without the written consent of the Government.

ARTICLE 2. *Operator's property rights.*—(a) The Operator represents and undertakes that Annex I correctly describes the land which is the subject of this contract and the nature of the Operator's rights of property and possession therein (whether as owner, lessee, or otherwise), and that such right, title, or interest is subject only to the following claims, liens, or encumbrances: None

(b) The Subordination Agreement of the holder of any claim, lien, or encumbrance listed above and (if the Operator does not hold the legal title) the Consent to Lien of any holder of the legal title of the land (lessor, seller, optionor, etc.) are attached, as follows: .....

(c) The Operator shall preserve and maintain his right, title, and interest in the land and his right to the possession thereof for the purposes of this contract, and shall devote the land and all existing improvements, facilities, buildings, installations, and appurtenances to the purposes of this contract. The Operator shall neither transfer, convey, nor surrender the land nor any right, title, or interest therein, nor permit nor suffer any claim, lien, or encumbrance thereon, without expressly referring to and providing

in the instrument of conveyance, lien, or encumbrance for the preservation of the Government's right to a percentage royalty on production and lien for the payment thereof. Two copies of such instrument shall be furnished to the Government. If the Government's rights to royalty as provided in Article 6 have been terminated, the provisions of this paragraph (c) shall become inapplicable.

ARTICLE 3. *Performance of the work.*—(a) Operator's responsibility.—The work shall be performed diligently, efficiently, expertly, in a workmanlike manner, and in accordance with good mining standards and State regulations governing health, safety, and liability insurance covering employment. The Operator shall provide suitable and adequate equipment, facilities, materials, supplies, and labor to complete the work, as specified in Article 1 (a).

(b) *Government may inspect.*—The Operator shall consult with and inform the Government on all phases of the work as it progresses. The Government may enter at all reasonable times to inspect the work under the contract, and also after certification of discovery or development, to inspect production operations and underground workings. The Operator shall provide the Government with all reasonable means of access for such inspections.

ARTICLE 4. *Contribution by the Government.*—The Government will make its contribution on the basis of the monthly vouchers referred to in Article 5 (b); but all payments by the Government are provisional only, subject to audit, and until the account between the Operator and the Government is finally audited and settled and the Operator's final report has been rendered, the Government may withhold such sums as it sees fit but not in excess of 10 percent of the estimated total cost of the work. To the extent that excesses over fixed unit costs or any excess over the estimated total cost may be necessary for the performance of the work, the Operator shall incur and pay such excesses for his own account without contribution by the Government. The Government will not contribute to the cost of any work performed prior to the date of this contract. The Government may make payments for the account of the Operator directly to independent contractors and suppliers rather than to the Operator.

ARTICLE 5. *Reports, accounts, audits.*—(a) Operator's records.—The Operator shall keep suitable records and accounts of the units of work performed and of any production in which the Government may have an interest; and shall preserve those with respect to work performed for at least three years after final payment by the Government, and those with respect to production for at least three years after any obligation to pay royalties to the Government has terminated. The Government may inspect and audit said records and accounts at any time, either by itself or by a certified public accountant. The Comptroller General of the United States or his representative, until the expiration of said three-year periods, shall have access to and the right to examine all pertinent books, documents, papers, and records of the Operator.

(b) *Progress reports and vouchers.*—The Operator shall provide the Government with five copies of monthly progress reports in three sections as follows: (1) Operator's Monthly Report and Voucher showing a detailed statement of units of work performed during the reporting period; (2) Operator's Unit Cost and Progress Report showing the various types of work performed during the reporting period and the fixed unit costs incurred for each type of work; and (3) a Narrative Report of the work performed during the reporting period including adequate engineering-geological maps or sketches, drill hole logs and locations, and assay reports on samples taken concurrently with advance in mineralized ground. (Forms for reporting under (1) and (2) above will be provided by the Government.)

(c) *Final report.*—Upon completion of the work or termination of the Government's obligation to contribute to costs, the Operator shall furnish the Government with five copies of a final report (in addition to the final progress report and voucher). This final report shall include a geological and engineering evaluation of the results of the work performed under the contract with an estimate of the ore reserves resulting from such work, complete assay data, adequate geological and engineering maps or sketches, and a summary of the work performed and the unit costs thereof.

(d) *Report of sales.*—The Operator shall provide the Government with suitable accounting and documentary evidence covering all production to which the Government's percentage royalty relates, such as copies of smelter or concentrator settlement sheets, and certified accounts of production and sale or other disposition of production.

(e) *Compliance with requirements.*—If in the opinion of the Government any of the Operator's reports, records, or accounts are insufficient or incomplete, or if the Operator fails to make them, the Government may procure the making or completion of such with suitable attachments as an expense of the work to which the Operator shall contribute. The Government may withhold approval and payment of any vouchers relating to insufficient or incomplete reports, records, or accounts.

ARTICLE 6. *Repayment by Operator.*—(a) *Certification.*—If the Government considers that a discovery or development from which production may be made has resulted from the work, the Government, at any time not later than six months after the Operator has rendered a sufficient final report (see Article 5), may so certify in writing to the Operator. Such certification shall describe broadly or indicate the nature of the discovery or development.

(b) *Royalty on production.*—The Operator, as principal if the Operator is the producer or as surety if the Operator is not the producer (for example, if the Operator either transfers or fails to retain his interest in the land), shall pay to the Government a royalty on all minerals mined or produced from the land, as follows: (1) regardless of any certification of discovery or development, from the date of the contract until the lapse of the time within which the Government may make such certification or until the total net amount contributed by the Government without interest is fully repaid, whichever occurs first; or (2) if the Government makes a certification of discovery or development, for a period of ten years from the date of the contract or until the total net amount contributed by the Government without interest is fully repaid, whichever occurs first.

(c) *Basis for computation.*—The Government's royalty shall be a percentage of the gross proceeds (including any bonuses, premiums, allowances, or other benefits) from the production sold, in the form sold (ore, concentrates, metal, or equivalent), at the point of delivery (the f. o. b. point); *except,* that charges of *the buyer* arising in the regular course of business, and shown as deductions on the buyer's settlement sheets, on account of the cost of treatment processes performed by *the buyer,* sampling and assaying to determine the value of the production sold, and freight paid by *the buyer* to a carrier (not the Operator), shall be allowed as deductions in arriving at the "gross proceeds" as that term is used herein. Any costs of treatment processes, sampling, assaying, or transportation performed or paid by the Operator or by anyone other than the buyer are not deductible in arriving at the "gross proceeds" as that term is here used. The term "treatment processes," as here used, means those processes (such as milling, concentrating, smelting, refining, or equivalent, but excluding fabricating or manufacturing) applied to the crude ore or other production after it is extracted from the ground to put it into a commercially marketable form.

(d) *Unsold production.*—If any production (ore, concentrates, metal, or equivalent) after the lapse of six months from the date the ore was extracted from the ground remains neither sold nor used by the Operator in integrated manufacturing or fabricating operations (for instance, if it is stockpiled), the Government, at its option, as long as it so remains, may require the computation and payment of its royalty on the value of such production in the form (ore, concentrates, metal, or equivalent) it is in when the Government elects to require computation and payment. If any production is used by the Operator in integrated manufacturing or fabricating operations before the Government makes its election, the Government's royalty on such production shall be computed on the value thereof in the form in which and at the time it is so used. "Value" as here used means what is or would be gross income from mining operations for percentage depletion purposes in Federal income tax determination, or the market value, whichever is greater.

(e) *Percentages of royalty.*—The percentages of the Government's royalty shall be as follows:

One and one-half (1½) percent of amounts ("gross proceeds" or "value") not in excess of eight dollars ($8.00) per ton of production in the form in which sold, held, or used, plus one-half (½) percent for each additional full fifty cents ($0.50) by which such amounts exceed eight dollars ($8.00) per ton, but not in excess of five (5) percent of such amounts.

(For instance: the royalty on an amount of five dollars ($5.00) per ton would be one and one-half (1½) percent; on an amount of ten dollars ($10.00) per ton, three and one-half (3½) percent.)

(f) *Time for computation and payment.*—The Government's royalty shall be computed and paid currently upon each lot sold, held, or used in integrated operations, as the case may be, as above provided in this Article.

(g) *Lien for payment.*—To secure the payment of its percentage royalty, there is hereby granted to the Government a lien upon the land or the Operator's interest in the land and upon any production of minerals therefrom until the royalty claim is extinguished by lapse of time or is fully paid.

(h) *Notice to purchasers.*—The Operator shall give notice of the Government's claim for royalty to any purchaser of the production, and shall authorize and direct such purchaser to pay the royalty directly to the Government and to furnish the Government with copies of the settlement sheets. If the records of any production and sales or other disposition of production, whether the production is by the Operator or by others, are not made available to the Government, the amount of the royalty may be estimated by the Administrator, Defense Minerals Exploration Administration, or his successor, and his estimate thereof shall be final and binding upon the Operator.

(i) *No obligation to produce.*—Nothing in this contract is to be construed as imposing any obligation on the Operator or the Operator's successor in interest to engage in any production operations.

(j) *Government not obligated to buy.*—Nothing in this contract shall be construed as imposing any obligation on the Government to purchase any minerals mined or produced from the land.

ARTICLE 7. *Termination of the Government's obligations.*—(a) If in the opinion of the Government operations at any time have failed to achieve anticipated results that indicate the probability of making a worthwhile discovery and in the opinion of the Government further operations are not justified, the Government may give the Operator written notice thereof, and thereupon the Government shall be free of all obligation to pay on account of units of work not then performed, and the Operator shall be free of all further obligation to prosecute the work other than such as may be necessary and incidental to winding up, reporting, and accounting.

(b) If in the opinion of the Government the Operator is in any manner in default under the terms of the contract, the Government may give the Operator written notice of such default with a specification of reasonable time within which the default must be cured; and if the Operator fails to cure such default as required, thereupon the Government shall be relieved of all obligation to pay on account of units of work not performed when the notice was given, and the Operator shall be free of all obligation to prosecute the work other than such as may be necessary and incidental to winding up, reporting, and accounting. The Government may also avail itself of any other remedy the law may provide for breach of contract, including the right to rescind the contract and to demand repayment of all moneys contributed by the Government under the contract.

(c) The giving of any notice by the Government under the provisions of this Article 7 shall not affect the Government's rights as provided for in the contract with respect to a percentage royalty, and liens to secure the payment thereof, and such rights shall be fully preserved.

ARTICLE 8. *Notices to be given by the Government* may be delivered to the Operator or may be sent by registered mail addressed to the Operator at the mailing address stated in this contract. If mailed, notices are deemed to have been delivered five days after the date of mailing.

ARTICLE 9. *Officials not to benefit.*—No member of or delegate to Congress or resident commissioner shall be admitted to any share or part of this contract or to any benefit that may arise therefrom; but this provision shall not be construed to extend to this contract if made with a corporation for its general benefit.

ARTICLE 10. *Changes and added provisions.*—

.....

.....

.....

.....

.....

.....

Executed in sextuplicate the day and year first above written.

THE UNITED STATES OF AMERICA

.....
(Operator)

John J. Harris

By .....

By .....

Administrator, Defense Minerals Exploration Administration

.....

I, ..., certify that I am the ..... secretary of the corporation named as Operator herein; that ....., who signed this contract on behalf of the Operator, was then ..... of said corporation; that said contract was duly signed for and in behalf of said corporation by authority of its governing body, and is within the scope of its corporate powers.

.....

[CORPORATE SEAL]

U. S. GOVERNMENT PRINTING OFFICE: 1956—O-383069

EXPLORATION PROJECT CONTRACT
JOHN J. MANNIX
DOCKET NO. [illegible]

ANNEX I

The land referred to in Article 2 of the Contract, known as the Mallonee Mine, is located at an elevation of 3,870 feet on the north slope of the southeast spur of Chalk Mountain, Mitchell County, North Carolina, 1.7 miles N. 49° W. of Mt Mitchell, Spruce Pine, North Carolina. The Operator is the owner of the property, which is more particularly described as follows:

Beginning on a stake in an old line at a black gum stump and locust and running N. 89° W. 56½ poles to a natural set flint rock on top of mountain in Patent line; thence N. 30° 45' W. with said line 24 poles to a hickory on a large rock, an old corner; thence S. 87° E. 70 poles to a stake and pointers; thence S. 1° 30' E 2 poles and 9 links to a poplar; thence S. 1° E. 24 poles to a stake at an old apple tree; thence S. 3° 45' W. 16½ poles to a poplar on a bank of road; thence S. 1° W. 2 poles to beginning and containing 19 acres, more or less.

EXPLORATION PROJECT CONTRACT
JOHN J. HANDIS
DOCKET NO. DMEA-4888

EXHIBIT A

Description of the Work

Exploration for concentrations of strategic mica shall be performed in the area indicated on the attached map entitled, "Hughes Mine, Mitchell County, North Carolina, DMEA - 4888 - mica," as follows:

1. Construct:

(a) A toolhouse, minimum dimensions 7 feet by 8 feet by 10 feet.

(b) A powder storage magazine, minimum dimensions 4 feet by 3 feet by 2½ feet.

(c) An exploder storage magazine, minimum dimensions 2 feet by 1½ feet by 1 foot.

The toolhouse may be unfloored; shall be made from unfinished lumber, with protective roof covering; and shall be equipped with lock and key.

The powder and exploder magazines shall be bound on all sides; shall be made from 2-inch hardwood or 3-inch softwood lumber; and shall be braced at the corners. No metal shall be exposed; and the doors shall be equipped with the equivalent of a 5-tumbler Yarwood lock.

2. Prepare a shaft site by driving 8 feet of timbered raise, 5 by 6 feet in cross section in the clear, at approximately 65 degrees, and cut a wedge-shaped rope channel, 3 feet wide, in the back from the portal to the top of the raise.

3. From the shaft site, sink a two-compartment vertical and/or inclined shaft for a distance of not more than 45 feet.

4. Explore the pegmatite by driving, from or near the bottom of the shaft, drifts and/or crosscuts for a distance of not more than 80 feet.

The shaft and the drifts and/or crosscuts shall be timbered as necessary and shall have minimum cross-sectional dimensions of 5 feet by 7 feet in the clear of timber.

All work shall be performed on the pegmatite or in as close proximity thereto as possible.

The locations, inclinations, directions, and extent of all work are subject to the approval of the Government.

Fixed Unit Costs

1. Construct - Toolhouse 1/	$76.00		
Powder magazine 1/	25.00		
Exploder magazine 1/	15.00	$116.00	
2. Prepare a shaft site as follows:			
Raise - 8 feet @ $20/ft.		$160.00	
Rope channel - 262 cubic feet @ $0.50/cu.ft.		$131.00	
3. Sink 45 feet of shaft @ $45/ft.		$2,025.00	
4. Drive 80 feet of drifts and/or crosscuts @ $34/ft.		$2,720.00	
Estimated total cost of project			$5,152.00
Government participation @ 75 percent			$3,864.00

1/ The completed work constitutes the unit.

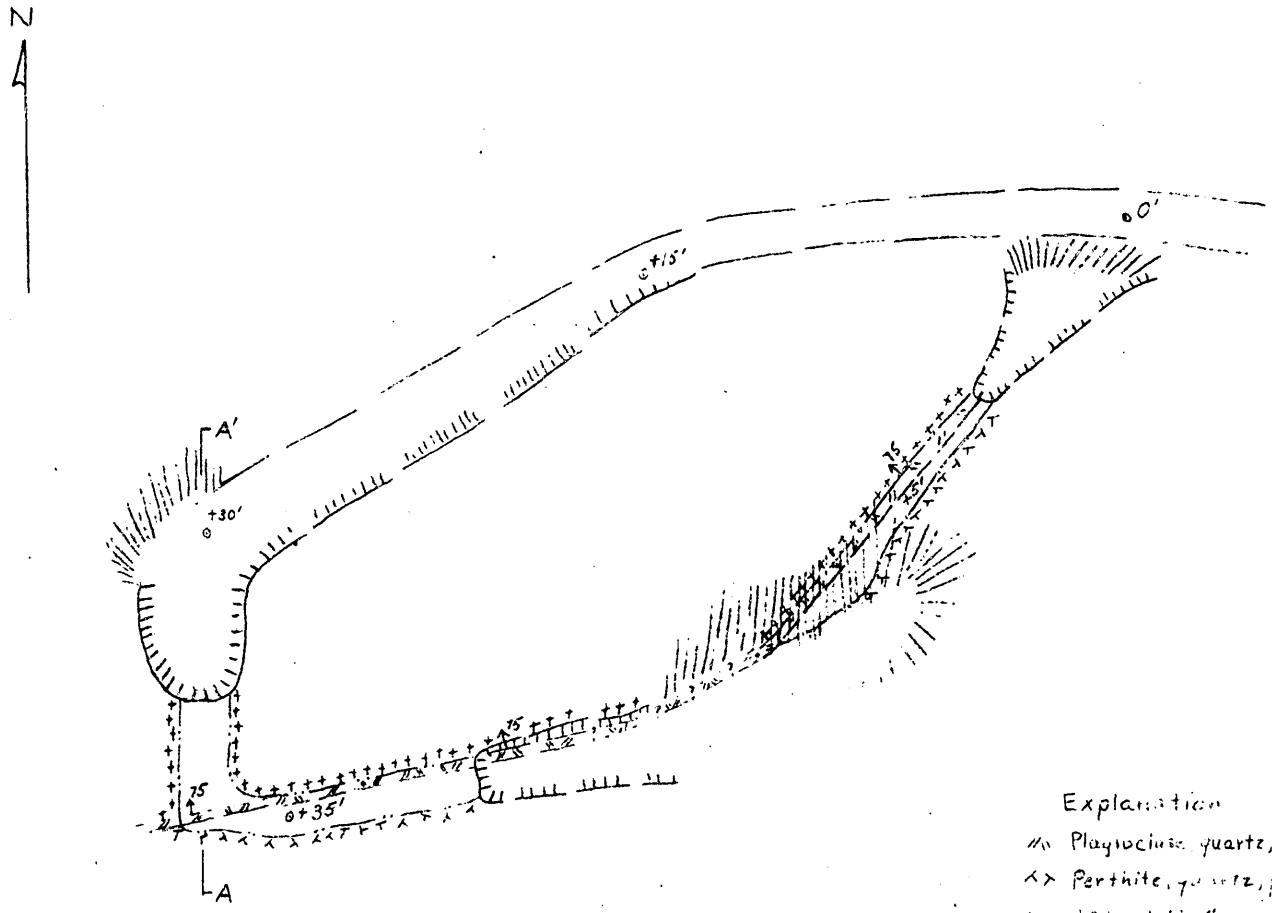

Explanation

Plagioclase, quartz, muscovite zone

Perthite, quartz, plagioclase

"Alaskite"

Mica schist

Wall of open cut

Lower adit & stope

Upper adits

Dump

Spot elevations

Contact showing dip

Tape & Brunton survey

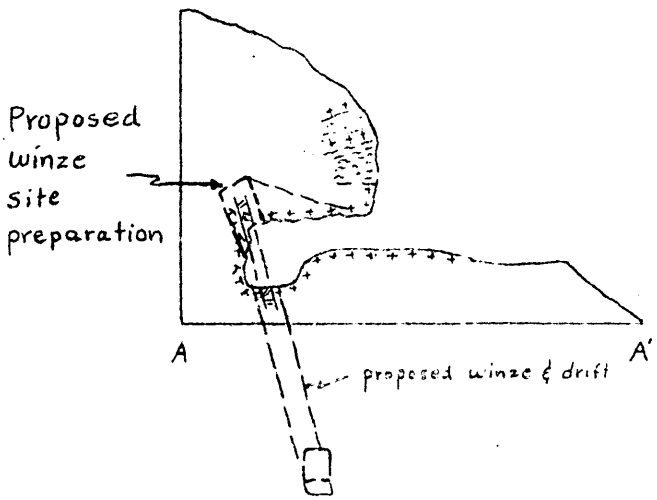

McHone Mine

Mitchell County, North Carolina

DMEA - 4888 - mine

Scale

0 20 40 feet

Audit copy

MF-200A
(Rev. April 1956)

UNITED STATES OF AMERICA
DEPARTMENT OF THE INTERIOR
DEFENSE MINERALS EXPLORATION ADMINISTRATION
EXPLORATION PROJECT CONTRACT
(Short Form)

DMEA No.	*Commodity*	*Contract No. Idm–E*	*County*	*State*
4888	Mica		Mitchell	North Carolina

It is agreed ....., between the United States of America, acting through the Department of the Interior, Defense Minerals Exploration Administration, hereinafter called the "Government," and John J. Harris

whose mailing address is Route #1
Marion, North Carolina
hereinafter called the "Operator," as follows:

ARTICLE 1. *Authority and project.*—(a) This contract is entered into under the authority of the Defense Production Act of 1950, as amended. It consists of this form (MF–200A), the attached Annex I (land description), Exhibit A (work and costs), and the maps and documents listed therein. The project work is a search for indicated or undeveloped deposits of the commodity designated above. The Operator shall begin the work on or before ....., and, subject to the provisions of Article 7 and Exhibit A, shall complete the work within 8 months from the date of the contract.

(b) The description of the work and the fixed cost for each unit of work to be performed (per foot of drilling, per foot of drifting, per hour of operations, etc.) are hereby agreed upon as specified in Exhibit A. The estimated total cost of the project work is $5,152.00. The Government will contribute 75 percent of the fixed unit cost of the work performed, not exceeding $3,864.00, in accordance with the provisions of Articles 4 and 5.

(c) The Operator shall not transfer or assign this contract or any right or obligation thereunder without the written consent of the Government.

ARTICLE 2. *Operator's property rights.*—(a) The Operator represents and undertakes that Annex I correctly describes the land which is the subject of this contract and the nature of the Operator's rights of property and possession therein (whether as owner, lessee, or otherwise), and that such right, title, or interest is subject only to the following claims, liens, or encumbrances: None

(b) The Subordination Agreement of the holder of any claim, lien, or encumbrance listed above and (if the Operator does not hold the legal title) the Consent to Lien of any holder of the legal title of the land (lessor, seller, optionor, etc.) are attached, as follows: .....

(c) The Operator shall preserve and maintain his right, title, and interest in the land and his right to the possession thereof for the purposes of this contract, and shall devote the land and all existing improvements, facilities, buildings, installations, and appurtenances to the purposes of this contract. The Operator shall neither transfer, convey, nor surrender the land nor any right, title, or interest therein, nor permit nor suffer any claim, lien, or encumbrance thereon, without expressly referring to and providing

in the instrument of conveyance, lien, or encumbrance for the preservation of the Government's right to a percentage royalty on production and lien for the payment thereof. Two copies of such instrument shall be furnished to the Government. If the Government's rights to royalty as provided in Article 6 have been terminated, the provisions of this paragraph (c) shall become inapplicable.

ARTICLE 3. *Performance of the work.*—(a) Operator's responsibility.—The work shall be performed diligently, efficiently, expertly, in a workmanlike manner, and in accordance with good mining standards and State regulations governing health, safety, and liability insurance covering employment. The Operator shall provide suitable and adequate equipment, facilities, materials, supplies, and labor to complete the work, as specified in Article 1 (a).

(b) *Government may inspect.*—The Operator shall consult with and inform the Government on all phases of the work as it progresses. The Government may enter at all reasonable times to inspect the work under the contract, and also after certification of discovery or development, to inspect production operations and underground workings. The Operator shall provide the Government with all reasonable means of access for such inspections.

ARTICLE 4. *Contribution by the Government.*—The Government will make its contribution on the basis of the monthly vouchers referred to in Article 5 (b); but all payments by the Government are provisional only, subject to audit, and until the account between the Operator and the Government is finally audited and settled and the Operator's final report has been rendered, the Government may withhold such sums as it sees fit but not in excess of 10 percent of the estimated total cost of the work. To the extent that excesses over fixed unit costs or any excess over the estimated total cost may be necessary for the performance of the work, the Operator shall incur and pay such excesses for his own account without contribution by the Government. The Government will not contribute to the cost of any work performed prior to the date of this contract. The Government may make payments for the account of the Operator directly to independent contractors and suppliers rather than to the Operator.

ARTICLE 5. *Reports, accounts, audits.*—(a) Operator's records.—The Operator shall keep suitable records and accounts of the units of work performed and of any production in which the Government may have an interest; and shall preserve those with respect to work performed for at least three years after final payment by the Government, and those with respect to production for at least three years after any obligation to pay royalties to the Government has terminated. The Government may inspect and audit said records and accounts at any time, either by itself or by a certified public accountant. The Comptroller General of the United States or his representative, until the expiration of said three-year periods, shall have access to and the right to examine all pertinent books, documents, papers, and records of the Operator.

(b) *Progress reports and vouchers.*—The Operator shall provide the Government with five copies of monthly progress reports in three sections as follows: (1) Operator's Monthly Report and Voucher showing a detailed statement of units of work performed during the reporting period; (2) Operator's Unit Cost and Progress Report showing the various types of work performed during the reporting period and the fixed unit costs incurred for each type of work; and (3) a Narrative Report of the work performed during the reporting period including adequate engineering-geological maps or sketches, drill hole logs and locations, and assay reports on samples taken concurrently with advance in mineralized ground. (Forms for reporting under (1) and (2) above will be provided by the Government.)

(c) *Final report.*—Upon completion of the work or termination of the Government's obligation to contribute to costs, the Operator shall furnish the Government with five copies of a final report (in addition to the final progress report and voucher). This final report shall include a geological and engineering evaluation of the results of the work performed under the contract with an estimate of the ore reserves resulting from such work, complete assay data, adequate geological and engineering maps or sketches, and a summary of the work performed and the unit costs thereof.

(d) *Report of sales.*—The Operator shall provide the Government with suitable accounting and documentary evidence covering all production to which the Government's percentage royalty relates, such as copies of smelter or concentrator settlement sheets, and certified accounts of production and sale or other disposition of production.

(e) *Compliance with requirements.*—If in the opinion of the Government any of the Operator's reports, records, or accounts are insufficient or incomplete, or if the Operator fails to make them, the Government may procure the making or completion of such with suitable attachments as an expense of the work to which the Operator shall contribute. The Government may withhold approval and payment of any vouchers relating to insufficient or incomplete reports, records, or accounts.

ARTICLE 6. *Repayment by Operator.*—(a) *Certification.*—If the Government considers that a discovery or development from which production may be made has resulted from the work, the Government, at any time not later than six months after the Operator has rendered a sufficient final report (see Article 5), may so certify in writing to the Operator. Such certification shall describe broadly or indicate the nature of the discovery or development.

(b) *Royalty on production.*—The Operator, as principal if the Operator is the producer or as surety if the Operator is not the producer (for example, if the Operator either transfers or fails to retain his interest in the land), shall pay to the Government a royalty on all minerals mined or produced from the land, as follows: (1) regardless of any certification of discovery or development, from the date of the contract until the lapse of the time within which the Government may make such certification or until the total net amount contributed by the Government without interest is fully repaid, whichever occurs first; or (2) if the Government makes a certification of discovery or development, for a period of ten years from the date of the contract or until the total net amount contributed by the Government without interest is fully repaid, whichever occurs first.

(c) *Basis for computation.*—The Government's royalty shall be a percentage of the gross proceeds (including any bonuses, premiums, allowances, or other benefits) from the production sold, in the form sold (ore, concentrates, metal, or equivalent), at the point of delivery (the f. o. b. point); *except,* that charges of *the buyer* arising in the regular course of business, and shown as deductions on the buyer's settlement sheets, on account of the cost of treatment processes performed by *the buyer,* sampling and assaying to determine the value of the production sold, and freight paid by *the buyer* to a carrier (not the Operator), shall be allowed as deductions in arriving at the "gross proceeds" as that term is used herein. Any costs of treatment processes, sampling, assaying, or transportation performed or paid by the Operator or by anyone other than the buyer are not deductible in arriving at the "gross proceeds" as that term is here used. The term "treatment processes," as here used, means those processes (such as milling, concentrating, smelting, refining, or equivalent, but excluding fabricating or manufacturing) applied to the crude ore or other production after it is extracted from the ground to put it into a commercially marketable form.

(d) *Unsold production.*—If any production (ore, concentrates, metal, or equivalent) after the lapse of six months from the date the ore was extracted from the ground remains neither sold nor used by the Operator in integrated manufacturing or fabricating operations (for instance, if it is stockpiled), the Government, at its option, as long as it so remains, may require the computation and payment of its royalty on the value of such production in the form (ore, concentrates, metal, or equivalent) it is in when the Government elects to require computation and payment. If any production is used by the Operator in integrated manufacturing or fabricating operations before the Government makes its election, the Government's royalty on such production shall be computed on the value thereof in the form in which and at the time it is so used. "Value" as here used means what is or would be gross income from mining operations for percentage depletion purposes in Federal income tax determination, or the market value, whichever is greater.

(e) *Percentages of royalty.*—The percentages of the Government's royalty shall be as follows:

One and one-half (1½) percent of amounts ("gross proceeds" or "value") not in excess of eight dollars ($8.00) per ton of production in the form in which sold, held, or used, plus one-half (½) percent for each additional full fifty cents ($0.50) by which such amounts exceed eight dollars ($8.00) per ton, but not in excess of five (5) percent of such amounts.

(For instance: the royalty on an amount of five dollars ($5.00) per ton would be one and one-half (1½) percent; on an amount of ten dollars ($10.00) per ton, three and one-half (3½) percent.)

(f) *Time for computation and payment.*—The Government's royalty shall be computed and paid currently upon each lot sold, held, or used in integrated operations, as the case may be, as above provided in this Article.

(g) *Lien for payment.*—To secure the payment of its percentage royalty, there is hereby granted to the Government a lien upon the land or the Operator's interest in the land and upon any production of minerals therefrom until the royalty claim is extinguished by lapse of time or is fully paid.

(h) *Notice to purchasers.*—The Operator shall give notice of the Government's claim for royalty to any purchaser of the production, and shall authorize and direct such purchaser to pay the royalty directly to the Government and to furnish the Government with copies of the settlement sheets. If the records of any production and sales or other disposition of production, whether the production is by the Operator or by others, are not made available to the Government, the amount of the royalty may be estimated by the Administrator, Defense Minerals Exploration Administration, or his successor, and his estimate thereof shall be final and binding upon the Operator.

(i) *No obligation to produce.*—Nothing in this contract is to be construed as imposing any obligation on the Operator or the Operator's successor in interest to engage in any production operations.

(j) *Government not obligated to buy.*—Nothing in this contract shall be construed as imposing any obligation on the Government to purchase any minerals mined or produced from the land.

ARTICLE 7. *Termination of the Government's obligations.*—(a) If in the opinion of the Government operations at any time have failed to achieve anticipated results that indicate the probability of making a worthwhile discovery and in the opinion of the Government further operations are not justified, the Government may give the Operator written notice thereof, and thereupon the Government shall be free of all obligation to pay on account of units of work not then performed, and the Operator shall be free of all further obligation to prosecute the work other than such as may be necessary and incidental to winding up, reporting, and accounting.

(b) If in the opinion of the Government the Operator is in any manner in default under the terms of the contract, the Government may give the Operator written notice of such default with a specification of reasonable time within which the default must be cured; and if the Operator fails to cure such default as required, thereupon the Government shall be relieved of all obligation to pay on account of units of work not performed when the notice was given, and the Operator shall be free of all obligation to prosecute the work other than such as may be necessary and incidental to winding up, reporting, and accounting. The Government may also avail itself of any other remedy the law may provide for breach of contract, including the right to rescind the contract and to demand repayment of all moneys contributed by the Government under the contract.

(c) The giving of any notice by the Government under the provisions of this Article 7 shall not affect the Government's rights as provided for in the contract with respect to a percentage royalty, and liens to secure the payment thereof, and such rights shall be fully preserved.

ARTICLE 8. *Notices to be given by the Government* may be delivered to the Operator or may be sent by registered mail addressed to the Operator at the mailing address stated in this contract. If mailed, notices are deemed to have been delivered five days after the date of mailing.

ARTICLE 9. *Officials not to benefit.*—No member of or delegate to Congress or resident commissioner shall be admitted to any share or part of this contract or to any benefit that may arise therefrom; but this provision shall not be construed to extend to this contract if made with a corporation for its general benefit.

ARTICLE 10. *Changes and added provisions.*—

Executed in sextuplicate the day and year first above written.

THE UNITED STATES OF AMERICA

.....
(Operator)

John J. Harris

By .....

By .....

Administrator, Defense Minerals Exploration Administration

.....

I, ..., certify that I am the ..... secretary of the corporation named as Operator herein; that ....., who signed this contract on behalf of the Operator, was then ..... of said corporation; that said contract was duly signed for and in behalf of said corporation by authority of its governing body, and is within the scope of its corporate powers.

.....

[CORPORATE SEAL]

U. S. GOVERNMENT PRINTING OFFICE: 1956—O-383069

EXPLORATION PROJECT CONTRACT
JOHN J. HARRIS
DOCKET NO. [illegible]-4088

ANNEX I

The land referred to in Article 2 of the Contract, known as the McKenzie Mine, is located at an elevation of 3,270 feet on the north slope of the southeast spur of Chalk Mountain, Mitchell County, North Carolina, 1.7 miles S. 49° W. of RM 2518, Spruce Pine, North Carolina. The Operator is the owner of the property, which is more particularly described as follows:

Beginning on a stake in an old line at a black gum stump and iscupt and running N. 89° W. 36½ poles to a natural set flint rock on top of mountain in Potent line; thence N. 88° 45' W. with said line 54 poles to a hickory on a large rock, an old corner; thence S. 87° E. 70 poles to a stake and pointers; thence S. 1° 30' E 8 poles and 9 links to a poplar; thence S. 18° E. 24 poles to a stake at an old apple tree; thence S. 4° 45' W. 18½ poles to a poplar on a bank of road; thence S. 16° W. 2 poles to beginning and containing 19 acres, more or less.

EXPLORATION PROJECT CONTRACT
JOHN J. HARRIS
DOCKET NO. DMEA-4888

EXHIBIT A

Description of the Work

Exploration for concentrations of strategic mica shall be performed in the area indicated on the attached map entitled, "Nakema Mine, Mitchell County, North Carolina, DMEA - 4888 - mica," as follows:

1. Construct:

(a) A toolhouse, minimum dimensions 7 feet by 8 feet by 10 feet.

(b) A powder storage magazine, minimum dimensions 4 feet by 3 feet by 2½ feet.

(c) An exploder storage magazine, minimum dimensions 2 feet by 1½ feet by 1 foot.

The toolhouse may be unfloored; shall be made from unfinished lumber, with protective roof covering; and shall be equipped with lock and key.

The powder and exploder magazines shall be boxed on all sides; shall be made from 2-inch hardwood or 3-inch softwood lumber; and shall be braced at the corners. No metal shall be exposed; and the doors shall be equipped with the equivalent of a 5-tumbler jarproof lock.

2. Prepare a shaft site by driving 8 feet of timbered raise, 5 by 5 feet in cross section in the clear, at approximately 65 degrees, and cut a wedge-shaped rope channel, 3 feet wide, in the back from the portal to the top of the raise.

3. From the shaft site, sink a two-compartment vertical and/or inclined shaft for a distance of not more than 45 feet.

4. Explore the pegmatite by driving, from or near the bottom of the shaft, drifts and/or crosscuts for a distance of not more than 80 feet.

The shaft and the drifts and/or crosscuts shall be timbered as necessary and shall have minimum cross-sectional dimensions of 5 feet by 7 feet in the clear of timber.

All work shall be performed on the pegmatite or in as close proximity thereto as possible.

The locations, inclinations, directions, and extent of all work are subject to the approval of the Government.

Fixed Unit Costs

1. Construct - Toolhouse 1/	$76.00	
Powder magazine 1/	25.00	
Exploder magazine 1/15.00		$116.00
2. Prepare 3 shaft sites as follows:		
Mine - 5 feet @ $30/ft.		$150.00
Rope shovel - 366 cubic feet @ $0.36/cu.ft.		$131.00
3. Sink 45 feet of shaft @ $45/ft.		$2,025.00
4. Drive 80 feet of drifts and/or crosscuts @ $34/ft.		$2,720.00
Estimated total cost of project		$5,152.00
Government participation @ 75 percent		$3,864.00

1/ The completed work constituted the unit.

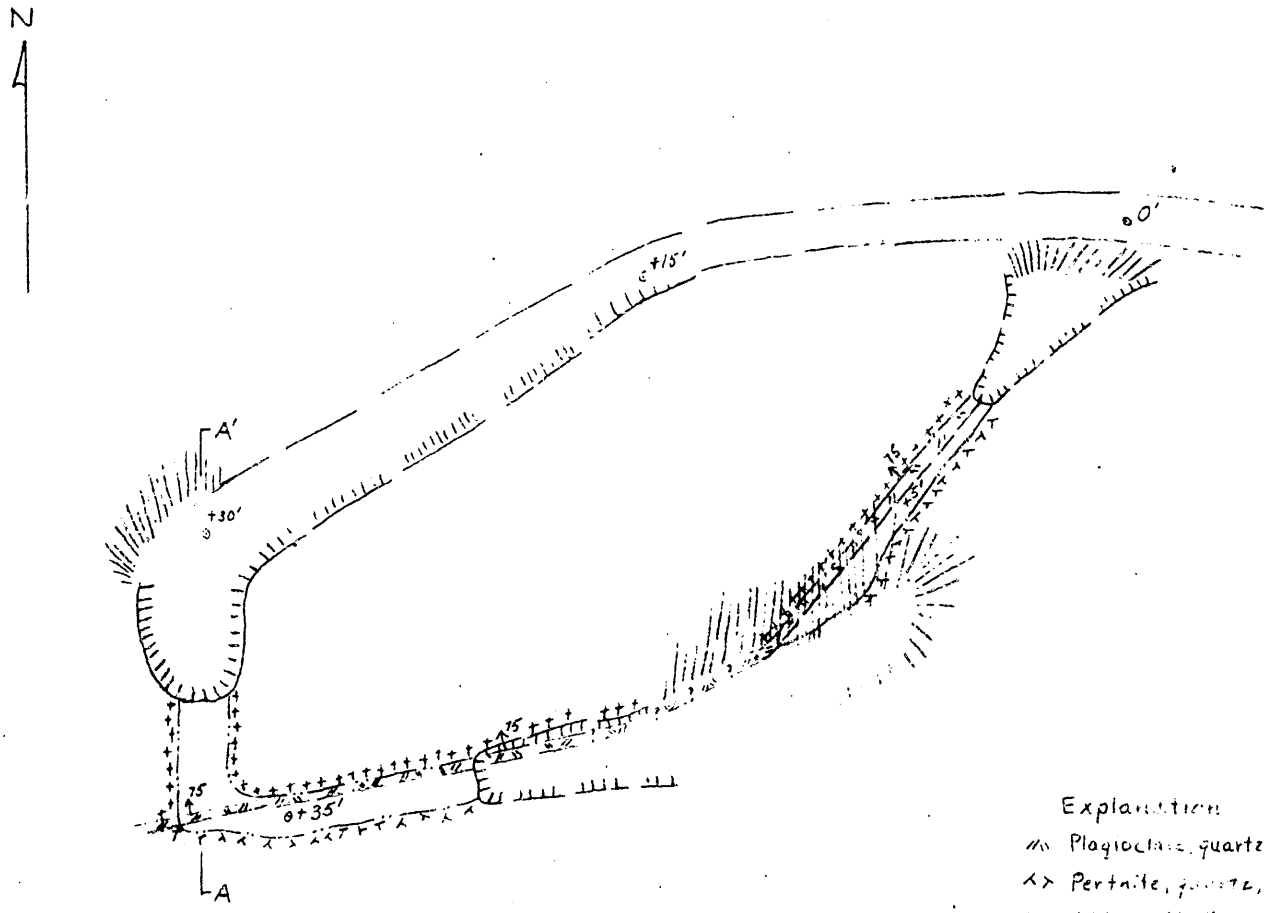

Explanation

Plagioclase, quartz, muscovite zone

Pertnite, quartz, plagioclase

"Alaskite"

Mica schist

Lower adit & stope

Upper adit

Dump

Contact showing dip

Tape & Brunton survey

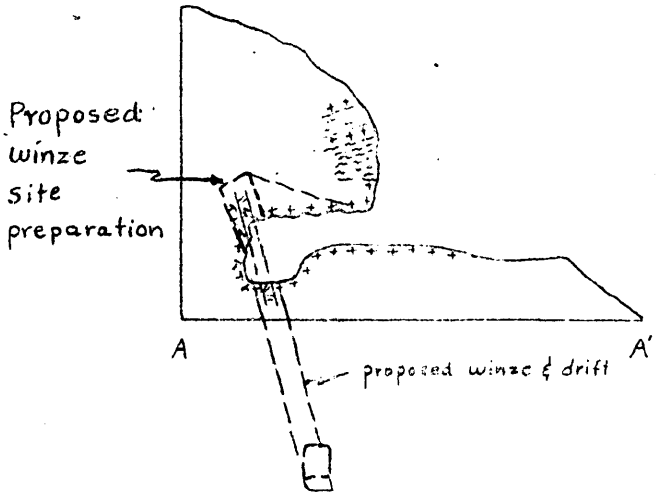

McHone Mine

Mitchell County, North Carolina

DMEA - 4858 - mica

Scale

0 20 40 feet

EXPLORATION PROPERTY CONTRACT
JOHN J. HARRIS
DOCKET NO. [illegible]

ANNEX I

The land referred to in Article 2 of the Contract, known as the Hollows Mine, is located at an elevation of 3,870 feet on the north slope of the southeast spur of Chalk Mountain, Mitchell County, North Carolina, 1.7 miles S. 45° W. of MM 2516, Spruce Pine, North Carolina. The Operator is the owner of the property, which is more particularly described as follows:

Beginning on a stake in an old line at a black gum stump and locust and running N. 59° W. 56½ poles to a natural set flint rock on top of mountain in Potent line; thence N. 80° 45' W. with said line 34 poles to a hickory on a large rock, an old corner; thence S. 87° E. 70 poles to a stake and pointers; thence S. 1° 30' E 8 poles and 9 links to a poplar; thence S. 18° E. 34 poles to a stake at an old apple tree; thence S. 45° 45' W. 18½ poles to a poplar on a bank of road; thence S. 10° W. 2 poles to beginning and containing 19 acres, more or less.

EXTRA COPIES ARE FOR THE FIELD TEAM.

EXPLORATION PROJECT CONTRACT
JOHN J. HARRIS
DOCKET NO. NMEA-[illegible]

EXHIBIT A

Description of the Work

Exploration for concentrations of strategic mica shall be performed in the area indicated on the attached map entitled, "Hughes Mine, Mitchell County, North Carolina, NMEA - [illegible] - mica," as follows:

1. Construct:

(a) A toolhouse, minimum dimensions 7 feet by 8 feet by 10 feet.

(b) A powder storage magazine, minimum dimensions 4 feet by 3 feet by 2½ feet.

(c) An exploder storage magazine, minimum dimensions 2 feet by 1½ feet by 1 foot.

The toolhouse may be unfloored; shall be made from unfinished lumber, with protective roof covering; and shall be equipped with lock and key.

The powder and exploder magazines shall be boxed on all sides; shall be made from 2-inch hardwood or 3-inch softwood lumber; and shall be braced at the corners. No metal shall be exposed; and the doors shall be equipped with the equivalent of a 5-tumbler Yargesse lock.

2. Prepare a shaft site by driving 8 feet of timbered raise, 5 by 6 feet in cross section in the clear, at approximately 65 degrees, and cut a wedge-shaped rope channel, 3 feet wide, in the back from the portal to the top of the raise.

EXPLORATION PROJECT CONTRACT
JOHN J. BARNES
DOCKET NO. [illegible]

ARTICLE I

The land referred to in Article 2 of the Contract, known as the Mahana Mine, is located at an elevation of 3,270 feet on the north slope of the southeast spur of Chalk Mountain, Mitchell County, North Carolina, 1.7 miles S. 49° W. of Mt Ulla, Spruce Pine, North Carolina. The Operator is the owner of the property, which is more particularly described as follows:

Beginning on a stake in an old line at a black gum stump and laurel and running N. 89° W. 36½ poles to a natural rock flint rock on top of mountain in Potest line; thence N. 38° 45' W. with said line 54 poles to a hickory on a large rock, an old corner; thence S. 87° E. 70 poles to a stake and pointers; thence S. 15 30' W 2 poles and 9 links to a poplar; thence S. 15° E. 8½ poles to a stake at an old apple tree; thence S. 45° 45' W. 18½ poles to a poplar on a bank of road; thence S. 15° W. 2 poles to beginning and containing 19 acres, more or less.

3. From the shaft site, sink a [illegible] shaft and/or [illegible] shaft for a distance of not more than [illegible] feet.

4. Develop the possible by drifting, from or near the bottom of the shaft, drifts and/or crosscuts for a distance of not more than [illegible] feet.

The shaft and the drifts and/or crosscuts will be timbered as necessary and shall have minimum cross-sectional dimensions of 5 feet by 7 feet in the clear or better.

All work shall be performed on the expectation of in-situ production of samples as possible.

The locations, lengths, directions, and extent of all work are subject to the approval of the Government.

Final Bid Costs

1. Construct - Headframe 1/	$75.00	
Powder magazine 1/	77.00	
Explosive magazine 1/	15.00	$116.00
2. Furnish & install sinks as follows:		
Sinks - 5 feet @ $32/ft.		$160.00
Hoist manual - 500 cubic feet @ $0.50/cu.ft.		$131.00
3. Sink 65 feet of shaft @ $45/ft.		$2,925.00
4. Drive 60 feet of drifts and/or crosscuts @ $75/ft.		$3,750.00
Estimated total cost of project		$5,[illegible]
Government participation @ 75 percent		$3,[illegible]

1/ Two temporary work structures [illegible]

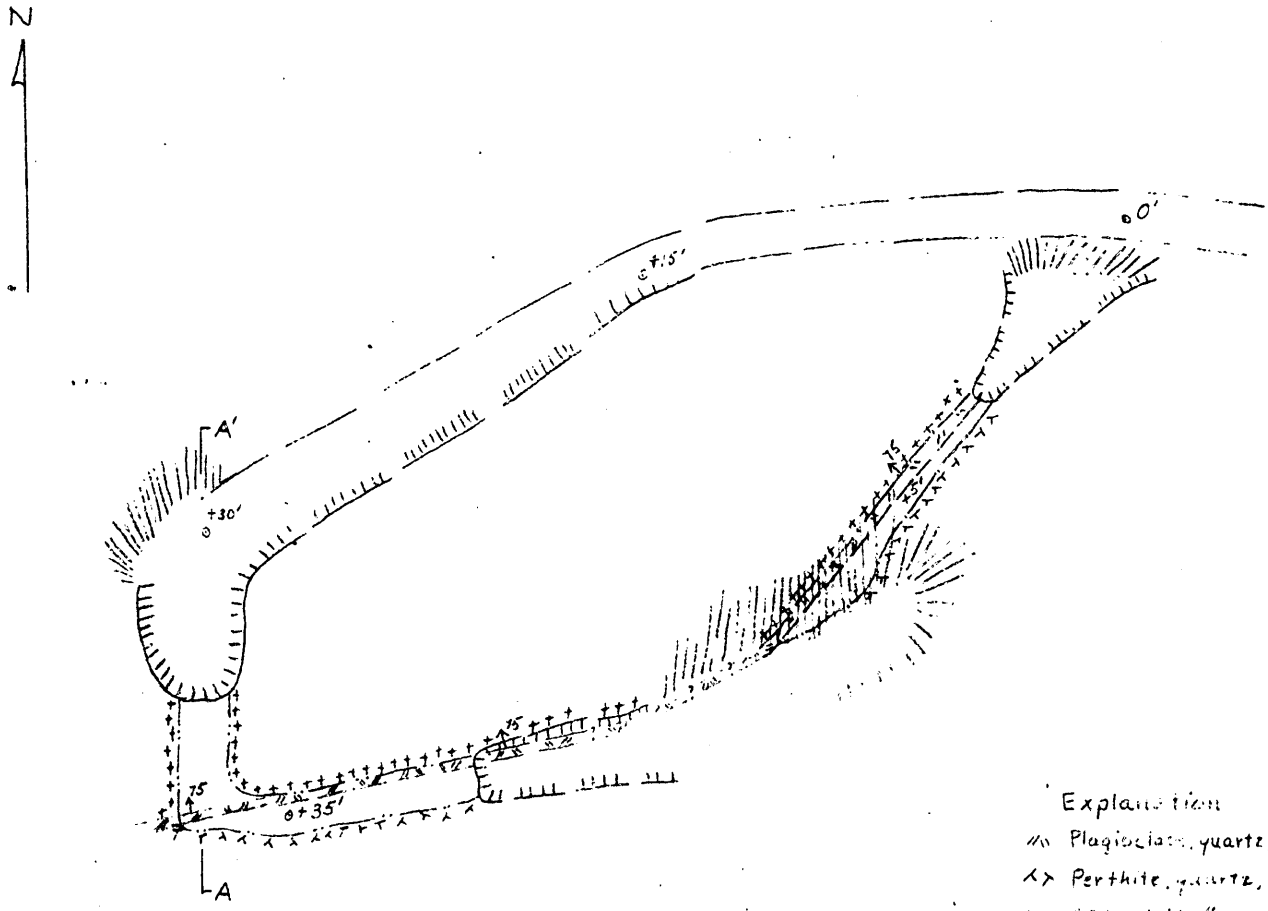

Explanation

Plagioclase, quartz, muscovite zone

Perthite, quartz, plagioclase

"Alaskite"

Mica schist

Wall of [illegible]

Lower adit & stope

Upper adit

Dump

[illegible] elevation

Contact showing dip

Tape & Brunton survey

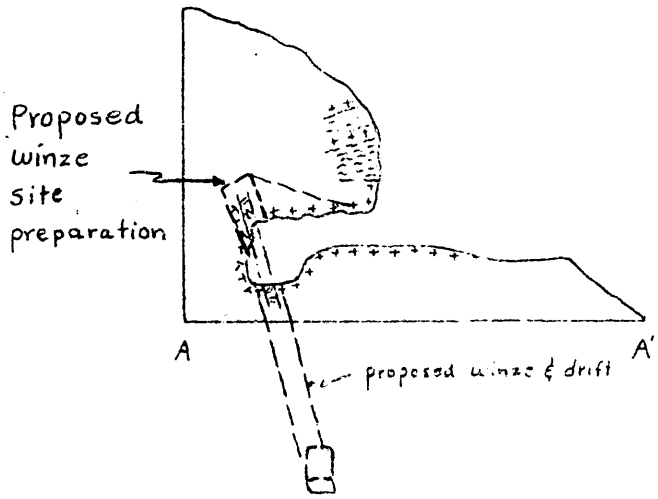

McHone Mine

Mitchell County, North Carolina

DMFA - 4888 - mica

Scale 0 20 40 feet

EXPLORATION PROJECT CONTRACT
JOHN J. HARRIS
DOCKET NO. [illegible]

EXHIBIT A

Description of the Work

Exploration for concentrations of strategic mica shall be performed in the area indicated on the attached map entitled, "Bakers Mine, Mitchell County, North Carolina, [illegible] - mica," as follows:

1. Construct:

(a) A toolhouse, minimum dimensions 7 feet by 8 feet by 10 feet.

(b) A powder storage magazine, minimum dimensions 4 feet by 3 feet by 6½ feet.

(c) An exploder storage magazine, minimum dimensions 2 feet by 1½ feet by 1 foot.

The toolhouse may be unfloored; shall be made from unfinished lumber, with protective roof covering; and shall be equipped with lock and key.

The powder and exploder magazines shall be banked on all sides; shall be made from 2-inch hardwood or 3-inch hardwood lumber; and shall be braced at the corners. The exploder shall be separate; and the doors shall be equipped with the equivalent of a 3-tumbler jarproof lock.

2. Prepare a shaft site by driving 8 feet of timbered rails, 5 by 6 feet in cross section in the clear, at approximately 65 degrees, and cut a wedge-shaped rupe shaft, 3 feet wide, in the back from the portal to the top of the rails.

5. From the shaft site, sink a two-compartment vertical and/or inclined shaft for a distance of not more than 45 feet.

6. Explore the magnetite by driving, from or near the bottom of the shaft, drifts and/or crosscuts for a distance of not more than 80 feet.

The shaft and the drifts and/or crosscuts shall be timbered as necessary and shall have minimum cross-sectional dimensions of 5 feet by 7 feet in the clear of timber.

All work shall be performed on the magnetite or in as close proximity thereto as possible.

The locations, inclinations, directions, and extent of all work are subject to the approval of the Government.

Fixed Bid Costs

1. Construct - Toolhouse 1/	$76.00	
Powder magazine 1/	25.00	
Exploder magazine 1/	15.00	$116.00
2. Prepare a shaft site as follows:		
Raise - 8 feet @ $20/ft.		$160.00
Rope channel - 262 cubic feet @ $0.50/cu.ft.		$131.00
3. Sink 45 feet of shaft @ $45/ft.		$2,025.00
4. Drive 80 feet of drifts and/or crosscuts @ $34/ft.		$2,720.00
Estimated total cost of project		$5,152.00
Government participation @ 75 percent		$3,864.00

1/ The completed work constitutes the unit.

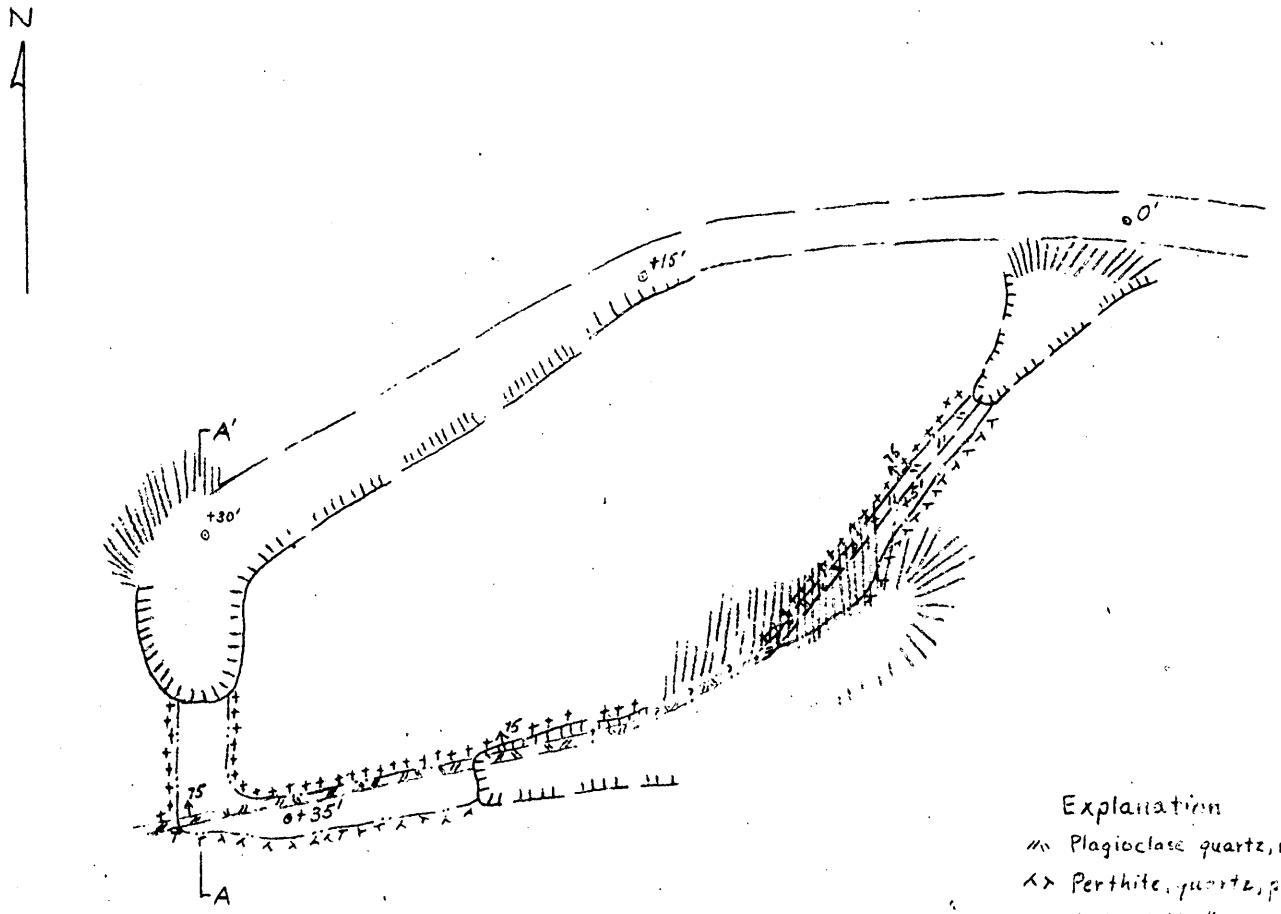

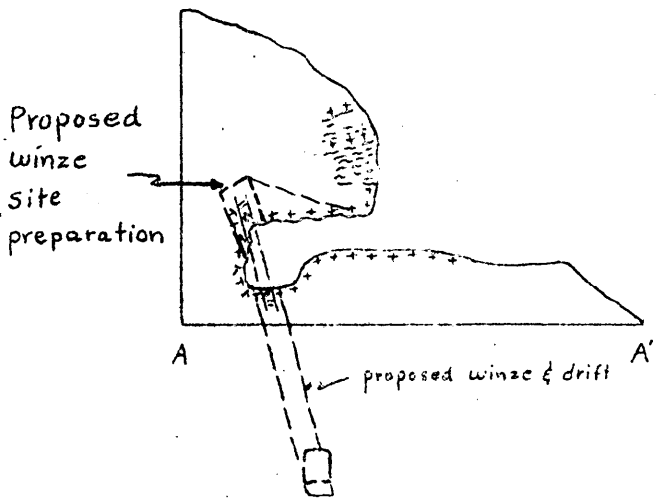

McHone Mine
Mitchell County, North Carolina
DMEA - 4888 - mica

Scale
0 20 40 feet

Extra copy

MF-200A
(Rev. April 1956)

UNITED STATES OF AMERICA
DEPARTMENT OF THE INTERIOR
DEFENSE MINERALS EXPLORATION ADMINISTRATION
EXPLORATION PROJECT CONTRACT
(Short Form)

DMEA No.	*Commodity*	*Contract No. Idm–E*	*County*	*State*
4988	Mica		Mitchell	North Carolina

It is agreed ....., between the United States of America, acting through the Department of the Interior, Defense Minerals Exploration Administration, hereinafter called the "Government," and John J. Harris

whose mailing address is Route #1
Marion, North Carolina
hereinafter called the "Operator," as follows:

ARTICLE 1. *Authority and project.*—(a) This contract is entered into under the authority of the Defense Production Act of 1950, as amended. It consists of this form (MF–200A), the attached Annex I (land description), Exhibit A (work and costs), and the maps and documents listed therein. The project work is a search for indicated or undeveloped deposits of the commodity designated above. The Operator shall begin the work on or before ....., and, subject to the provisions of Article 7 and Exhibit A, shall complete the work within 8 months from the date of the contract.

(b) The description of the work and the fixed cost for each unit of work to be performed (per foot of drilling, per foot of drifting, per hour of operations, etc.) are hereby agreed upon as specified in Exhibit A. The estimated total cost of the project work is $5,152.00. The Government will contribute 75 percent of the fixed unit cost of the work performed, not exceeding $3,864.00, in accordance with the provisions of Articles 4 and 5.

(c) The Operator shall not transfer or assign this contract or any right or obligation thereunder without the written consent of the Government.

ARTICLE 2. *Operator's property rights.*—(a) The Operator represents and undertakes that Annex I correctly describes the land which is the subject of this contract and the nature of the Operator's rights of property and possession therein (whether as owner, lessee, or otherwise), and that such right, title, or interest is subject only to the following claims, liens, or encumbrances: None

(b) The Subordination Agreement of the holder of any claim, lien, or encumbrance listed above and (if the Operator does not hold the legal title) the Consent to Lien of any holder of the legal title of the land (lessor, seller, optionor, etc.) are attached, as follows: .....

(c) The Operator shall preserve and maintain his right, title, and interest in the land and his right to the possession thereof for the purposes of this contract, and shall devote the land and all existing improvements, facilities, buildings, installations, and appurtenances to the purposes of this contract. The Operator shall neither transfer, convey, nor surrender the land nor any right, title, or interest therein, nor permit nor suffer any claim, lien, or encumbrance thereon, without expressly referring to and providing

in the instrument of conveyance, lien, or encumbrance for the preservation of the Government's right to a percentage royalty on production and lien for the payment thereof. Two copies of such instrument shall be furnished to the Government. If the Government's rights to royalty as provided in Article 6 have been terminated, the provisions of this paragraph (c) shall become inapplicable.

ARTICLE 3. *Performance of the work.*—(a) Operator's responsibility.—The work shall be performed diligently, efficiently, expertly, in a workmanlike manner, and in accordance with good mining standards and State regulations governing health, safety, and liability insurance covering employment. The Operator shall provide suitable and adequate equipment, facilities, materials, supplies, and labor to complete the work, as specified in Article 1 (a).

(b) *Government may inspect.*—The Operator shall consult with and inform the Government on all phases of the work as it progresses. The Government may enter at all reasonable times to inspect the work under the contract, and also after certification of discovery or development, to inspect production operations and underground workings. The Operator shall provide the Government with all reasonable means of access for such inspections.

ARTICLE 4. *Contribution by the Government.*—The Government will make its contribution on the basis of the monthly vouchers referred to in Article 5 (b); but all payments by the Government are provisional only, subject to audit, and until the account between the Operator and the Government is finally audited and settled and the Operator's final report has been rendered, the Government may withhold such sums as it sees fit but not in excess of 10 percent of the estimated total cost of the work. To the extent that excesses over fixed unit costs or any excess over the estimated total cost may be necessary for the performance of the work, the Operator shall incur and pay such excesses for his own account without contribution by the Government. The Government will not contribute to the cost of any work performed prior to the date of this contract. The Government may make payments for the account of the Operator directly to independent contractors and suppliers rather than to the Operator.

ARTICLE 5. *Reports, accounts, audits.*—(a) Operator's records.—The Operator shall keep suitable records and accounts of the units of work performed and of any production in which the Government may have an interest; and shall preserve those with respect to work performed for at least three years after final payment by the Government, and those with respect to production for at least three years after any obligation to pay royalties to the Government has terminated. The Government may inspect and audit said records and accounts at any time, either by itself or by a certified public accountant. The Comptroller General of the United States or his representative, until the expiration of said three-year periods, shall have access to and the right to examine all pertinent books, documents, papers, and records of the Operator.

(b) *Progress reports and vouchers.*—The Operator shall provide the Government with five copies of monthly progress reports in three sections as follows: (1) Operator's Monthly Report and Voucher showing a detailed statement of units of work performed during the reporting period; (2) Operator's Unit Cost and Progress Report showing the various types of work performed during the reporting period and the fixed unit costs incurred for each type of work; and (3) a Narrative Report of the work performed during the reporting period including adequate engineering-geological maps or sketches, drill hole logs and locations, and assay reports on samples taken concurrently with advance in mineralized ground. (Forms for reporting under (1) and (2) above will be provided by the Government.)

(c) *Final report.*—Upon completion of the work or termination of the Government's obligation to contribute to costs, the Operator shall furnish the Government with five copies of a final report (in addition to the final progress report and voucher). This final report shall include a geological and engineering evaluation of the results of the work performed under the contract with an estimate of the ore reserves resulting from such work, complete assay data, adequate geological and engineering maps or sketches, and a summary of the work performed and the unit costs thereof.

(d) *Report of sales.*—The Operator shall provide the Government with suitable accounting and documentary evidence covering all production to which the Government's percentage royalty relates, such as copies of smelter or concentrator settlement sheets, and certified accounts of production and sale or other disposition of production.

(e) *Compliance with requirements.*—If in the opinion of the Government any of the Operator's reports, records, or accounts are insufficient or incomplete, or if the Operator fails to make them, the Government may procure the making or completion of such with suitable attachments as an expense of the work to which the Operator shall contribute. The Government may withhold approval and payment of any vouchers relating to insufficient or incomplete reports, records, or accounts.

ARTICLE 6. *Repayment by Operator.*—(a) *Certification.*—If the Government considers that a discovery or development from which production may be made has resulted from the work, the Government, at any time not later than six months after the Operator has rendered a sufficient final report (see Article 5), may so certify in writing to the Operator. Such certification shall describe broadly or indicate the nature of the discovery or development.

(b) *Royalty on production.*—The Operator, as principal if the Operator is the producer or as surety if the Operator is not the producer (for example, if the Operator either transfers or fails to retain his interest in the land), shall pay to the Government a royalty on all minerals mined or produced from the land, as follows: (1) regardless of any certification of discovery or development, from the date of the contract until the lapse of the time within which the Government may make such certification or until the total net amount contributed by the Government without interest is fully repaid, whichever occurs first; or (2) if the Government makes a certification of discovery or development, for a period of ten years from the date of the contract or until the total net amount contributed by the Government without interest is fully repaid, whichever occurs first.

(c) *Basis for computation.*—The Government's royalty shall be a percentage of the gross proceeds (including any bonuses, premiums, allowances, or other benefits) from the production sold, in the form sold (ore, concentrates, metal, or equivalent), at the point of delivery (the f. o. b. point); *except,* that charges of *the buyer* arising in the regular course of business, and shown as deductions on the buyer's settlement sheets, on account of the cost of treatment processes performed by *the buyer,* sampling and assaying to determine the value of the production sold, and freight paid by *the buyer* to a carrier (not the Operator), shall be allowed as deductions in arriving at the "gross proceeds" as that term is used herein. Any costs of treatment processes, sampling, assaying, or transportation performed or paid by the Operator or by anyone other than the buyer are not deductible in arriving at the "gross proceeds" as that term is here used. The term "treatment processes," as here used, means those processes (such as milling, concentrating, smelting, refining, or equivalent, but excluding fabricating or manufacturing) applied to the crude ore or other production after it is extracted from the ground to put it into a commercially marketable form.

(d) *Unsold production.*—If any production (ore, concentrates, metal, or equivalent) after the lapse of six months from the date the ore was extracted from the ground remains neither sold nor used by the Operator in integrated manufacturing or fabricating operations (for instance, if it is stockpiled), the Government, at its option, as long as it so remains, may require the computation and payment of its royalty on the value of such production in the form (ore, concentrates, metal, or equivalent) it is in when the Government elects to require computation and payment. If any production is used by the Operator in integrated manufacturing or fabricating operations before the Government makes its election, the Government's royalty on such production shall be computed on the value thereof in the form in which and at the time it is so used. "Value" as here used means what is or would be gross income from mining operations for percentage depletion purposes in Federal income tax determination, or the market value, whichever is greater.

(e) *Percentages of royalty.*—The percentages of the Government's royalty shall be as follows:

One and one-half (1½) percent of amounts ("gross proceeds" or "value") not in excess of eight dollars ($8.00) per ton of production in the form in which sold, held, or used, plus one-half (½) percent for each additional full fifty cents ($0.50) by which such amounts exceed eight dollars ($8.00) per ton, but not in excess of five (5) percent of such amounts.

(For instance: the royalty on an amount of five dollars ($5.00) per ton would be one and one-half (1½) percent; on an amount of ten dollars ($10.00) per ton, three and one-half (3½) percent.)

(f) *Time for computation and payment.*—The Government's royalty shall be computed and paid currently upon each lot sold, held, or used in integrated operations, as the case may be, as above provided in this Article.

(g) *Lien for payment.*—To secure the payment of its percentage royalty, there is hereby granted to the Government a lien upon the land or the Operator's interest in the land and upon any production of minerals therefrom until the royalty claim is extinguished by lapse of time or is fully paid.

(h) *Notice to purchasers.*—The Operator shall give notice of the Government's claim for royalty to any purchaser of the production, and shall authorize and direct such purchaser to pay the royalty directly to the Government and to furnish the Government with copies of the settlement sheets. If the records of any production and sales or other disposition of production, whether the production is by the Operator or by others, are not made available to the Government, the amount of the royalty may be estimated by the Administrator, Defense Minerals Exploration Administration, or his successor, and his estimate thereof shall be final and binding upon the Operator.

(i) *No obligation to produce.*—Nothing in this contract is to be construed as imposing any obligation on the Operator or the Operator's successor in interest to engage in any production operations.

(j) *Government not obligated to buy.*—Nothing in this contract shall be construed as imposing any obligation on the Government to purchase any minerals mined or produced from the land.

ARTICLE 7. *Termination of the Government's obligations.*—(a) If in the opinion of the Government operations at any time have failed to achieve anticipated results that indicate the probability of making a worthwhile discovery and in the opinion of the Government further operations are not justified, the Government may give the Operator written notice thereof, and thereupon the Government shall be free of all obligation to pay on account of units of work not then performed, and the Operator shall be free of all further obligation to prosecute the work other than such as may be necessary and incidental to winding up, reporting, and accounting.

(b) If in the opinion of the Government the Operator is in any manner in default under the terms of the contract, the Government may give the Operator written notice of such default with a specification of reasonable time within which the default must be cured; and if the Operator fails to cure such default as required, thereupon the Government shall be relieved of all obligation to pay on account of units of work not performed when the notice was given, and the Operator shall be free of all obligation to prosecute the work other than such as may be necessary and incidental to winding up, reporting, and accounting. The Government may also avail itself of any other remedy the law may provide for breach of contract, including the right to rescind the contract and to demand repayment of all moneys contributed by the Government under the contract.

(c) The giving of any notice by the Government under the provisions of this Article 7 shall not affect the Government's rights as provided for in the contract with respect to a percentage royalty, and liens to secure the payment thereof, and such rights shall be fully preserved.

ARTICLE 8. *Notices to be given by the Government* may be delivered to the Operator or may be sent by registered mail addressed to the Operator at the mailing address stated in this contract. If mailed, notices are deemed to have been delivered five days after the date of mailing.

ARTICLE 9. *Officials not to benefit.*—No member of or delegate to Congress or resident commissioner shall be admitted to any share or part of this contract or to any benefit that may arise therefrom; but this provision shall not be construed to extend to this contract if made with a corporation for its general benefit.

ARTICLE 10. *Changes and added provisions.*—

.....

.....

.....

.....

.....

.....

Executed in sextuplicate the day and year first above written.

THE UNITED STATES OF AMERICA

.....
(Operator)

John J. Harris

By .....

By .....

Administrator, Defense Minerals Exploration Administration

I, ..., certify that I am the ..... secretary of the corporation named as Operator herein; that ....., who signed this contract on behalf of the Operator, was then ..... of said corporation; that said contract was duly signed for and in behalf of said corporation by authority of its governing body, and is within the scope of its corporate powers.

.....

[CORPORATE SEAL]

U. S. GOVERNMENT PRINTING OFFICE: 1956—O-383069

EXPLORATION PROJECT CONTRACT
JOHN J. HANKIN
DOCKET NO. DMEA-4006

ANNEX I

The land referred to in Article 2 of the Contract, known as the Mellone Mine, is located at an elevation of 3,270 feet on the north slope of the southeast spur of Chalk Mountain, Mitchell County, North Carolina, 1.7 miles S. 49° W. of [illegible], Spruce Pine, North Carolina. The Operator is the owner of the property, which is more particularly described as follows:

Beginning on a stake in an old line at a black gum stump and locust and running N. 39° W. 56½ poles to a natural set flint rock on top of mountain in Patent line; thence N. 20° 45' W. with said line 54 poles to a hickory on a large rock, an old corner; thence N. 67° E. 78 poles to a stake and pointers; thence S. 1° 30' E 2 poles and 9 links to a poplar; thence S. 18° E. 24 poles to a stake at an old apple tree; thence S. 4° 45' W. 18½ poles to a poplar on a bank of rock; thence S. 18° W. 2 poles to beginning and containing 19 acres, more or less.

EXPLORATION PROJECT CONTRACT
JOHN J. HARRIS
DOCKET NO. DMEA-4088

EXHIBIT A

Description of the Work

Exploration for concentrations of strategic mica shall be performed in the area indicated on the attached map entitled, "Monkey Mine, Mitchell County, North Carolina, DMEA - 4088 - mica," as follows:

1. Construct:

(a) A toolhouse, minimum dimensions 7 feet by 8 feet by 10 feet.

(b) A powder storage magazine, minimum dimensions 4 feet by 3 feet by 2½ feet.

(c) An exploder storage magazine, minimum dimensions 2 feet by 1½ feet by 1 foot.

The toolhouse may be unfloored; shall be made from unfinished lumber, with protective roof covering; and shall be equipped with lock and key.

The powder and exploder magazines shall be boxed on all sides; shall be made from 2-inch hardwood or 1-inch softwood lumber; and shall be braced at the corners. No metal shall be exposed; and the doors shall be equipped with the equivalent of a 5-tumbler jarproof lock.

2. Prepare a shaft site by driving 8 feet of timbered raise, 5 by 6 feet in cross section in the clear, at approximately 65 degrees, and cut a wedge-shaped rope channel, 3 feet wide, in the back from the portal to the top of the raise.

2. From the shaft sump, sink a [illegible] vertical and/or inclined shaft for a distance of not more than 50 feet.

3. Enlarge the repository by drifting, from or near the bottom of the shaft, drifts and/or crosscuts for a distance of not more than 50 feet.

The shaft and the drifts and/or crosscuts shall be timbered as necessary and shall have clear cross-sectional dimensions of 5 feet by 7 feet at the close of timber.

All work shall be performed at the repository or in an area proximity thereto if possible.

The locations, inclinations, dimensions and extent of all shaft are subject to the approval of the Government.

Bid Schedule

1. Concrete - [illegible] 1/ [illegible]
   Power machine [illegible]
   Hand [illegible] $116.00

2. Prepare a shaft size as follows:
   Sump - 8 feet @ [illegible]/ft. $160.00
   Rope channel - [illegible] cubic feet @ $0.50/cu.ft. $[illegible]

3. Sink 45 feet of shaft @ [illegible]/ft. $2,[illegible]

4. Drive 50 feet of drifts and/or crosscuts @ $[illegible]/ft. $2,[illegible]

Estimated total cost of project $5,[illegible]

Government participation @ 75 percent $3,[illegible]

1/ The [illegible] must constitute the unit.

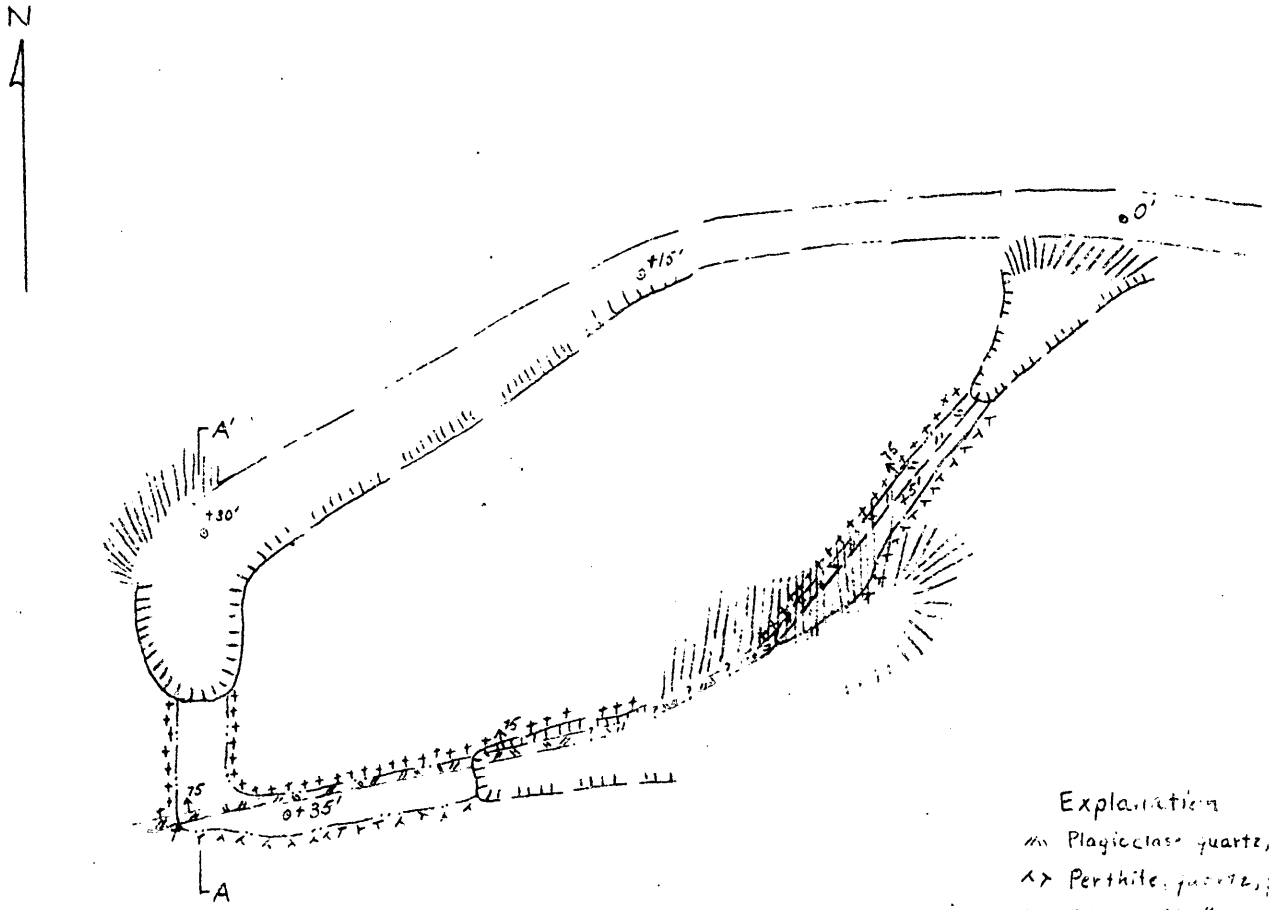

Explanation

Plagioclase quartz, muscovite zone

Perthite, quartz, plagioclase

"Alaskite"

Mica schist

Wall of open cut

Lower wall of stope

Upper wall line

Dump

Contact showing dip

Tape & Brunton survey

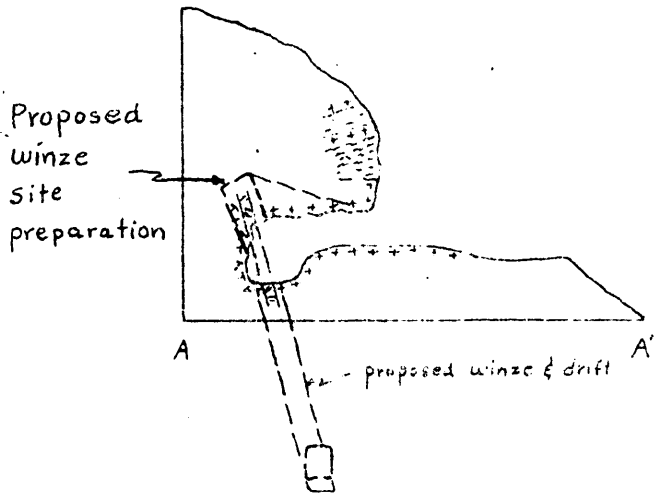

Mt. Home Mine

Mitchell County, North Carolina

DMEA - 4855 - mine

Scale

0 20 40 Feet

DMEA COPY
D M E A
RECEIVED FEB 20 [illegible]

DATE	INITIALS	CODE

DMEA Form 7
(12-56)

OFFICIAL FILE COPY

Date	Surname	Code
4/4	Anderson	600
4/4	Houk	

600

April 4, 1958

Memorandum

To: Mr. C. O. Mittendorf, Administrator

From: Lawrence G. Houk, Director
Division of Nonmetallic Minerals

Subject: Evaluation of application and field examination report
Docket No. DMEA-4888-Mica
John D. Harris
McHone Mine
Mitchell County, North Carolina

Denial of application is recommended.

Mica: Quality, generally not high; dark green; occurs in books from 2 by 3 inches to 5 by 6 inches. Much of it is ruby, wavy, and stained. Low recovery of strategic mica and low average value.

Pegmatite: Zoned, exposed for 200 feet along strike, a fracture filling in fine-to medium grained "alaskite". Weathered at surface, fresh at depth. Consists of (footwall not exposed) in hanging wall of from 1 to 2 feet of plagioclase, quartz and muscovite. The intermediate zone, or core, consists of coarse-grained perthite, plagioclase, quartz, and accessory minerals.

Old Workings: Consists of 3 adits on 2 levels, situated on a hillside about 100 feet apart, the lower and central on about the same level and the upper about 30 feet above the lower.

Applicant's Proposal:

50 feet of shaft @ $30.00/ft.	$1,500.00
100 feet of drifts @ $30.00/ft.	3,000.00
Miscellaneous expenses	500.00
Total amount requested	$5,000.00

Field Team Recommendation: A contract as follows:
(Costs amended by Division of Nonmetallic Minerals)

Construction - Toolhouse, powder and exploder magazine	$116.00
Preparation of a shaft site -	
Raise - 8 feet @ $20.00/ft.	160.00
Rope channel - 262 Cu. Ft. @ $0.50/C. Ft.	131.00
45 feet of shaft @ $45.00/ft.	2,025.00
80 feet of drifts and/or crosscuts @ $34.00/ft.	2,720.00
Estimated total cost of project	$5,152.00
Government participation @ 75%	$3,864.00

8623

Recommendations: The following pros and cons have been considered: We believe the cons outweigh the pros and therefore recommend denial of the application:

1. Pros: The pegmatite has been proven over a strike length of 200 feet, but not in depth. As far as can be determined the footwall has not been explored.

good mica with good target for upland exploration

2. Cons: Very little of the mica is of strategic grade. It is small and the price per pound is low. The examining engineers recommendation for assistance is qualified because of the low recovery of strategic mica and the low average value.

applicant impoverished but willing to learn

Comments by Commodity Members:

Bureau of Mines: "I concur with the recommendation of the Field Team that exploration assistance be granted".

Geological Survey: "I agree with the recommendation of the Field Team for approval of the application, but with the reservation that the examiners' proposed project of winzing, drifting, and crosscutting appears to have only a fair chance of discovering significant amounts of strategic mica".

Walter C. Anderson

Walter C. Anderson
Division of Nonmetallic Minerals

WCAnderson:rsi 4/4/58
Copy to: Admr. R. File
Mr. Heuk

April 9, 1958

Resume of telephone conversation with Mr. Robert A. Laurence, Knoxville, Tennessee, April 9, 1958

By: Lawrence G. Houk

The McHone application (DMEA-4888) was discussed and Mr. Laurence stated he did not feel too strongly on that.

DMEA Form 7
(12-56)

OFFICIAL FILE COPY

Date	Surname	Code
4/4	Anderson	600
4/4	Hardy	600
4/7	[illegible]	130
4/7	[illegible]	130
4/7	[illegible]	130
		~~130~~
	Fitterday	100
		220

APR 9 1958

600 Noted 4/7

Mr. John J. Harris
Route #1
Marion, North Carolina

Re: Docket No. DMEA-4888-Mica
John J. Harris
McHone Mine
Mitchell County, North Carolina

Dear Mr. Harris:

Your application for aid for an exploration project and other reports available to us in Washington relating to the subject property have been reviewed.

Projects approved by the Defense Minerals Exploration Administration must, in its judgment, show definite promise of yielding materials of acceptable grade in quantities that will significantly improve the mineral supply position for the National Defense Program.

Careful study of all our information indicates to us that the probability of disclosing significant reserves of mica is not sufficiently promising to justify Government participation. We regret to advise you, under these circumstances, that your application for exploration assistance is denied.

We wish to thank you for your interest in the Defense Minerals Program and for bringing your property to our attention.

Sincerely yours,

Administrator

WCAnderson:rsi 4/4/58
Copy to: Admr. R. File
Operating Committee
Mr. Kiilsgaard, 5222
Mr. Dietrich, 3061
Field Team, Region V
Mr. Houk

8623

DMEA
RECEIVED 17 1958
3/17 C 220
3/17 Hawk 600

UNITED STATES
DEPARTMENT OF THE INTERIOR
DEFENSE MINERALS EXPLORATION ADMINISTRATION
ROOM 13 POST OFFICE BLDG.
KNOXVILLE 2, TENN.

March 12, 1958

Memorandum

To: Operating Committee, DMEA - Washington

From: Executive Officer, DMEA - Region V - Knoxville, Tenn.

Subject: DMEA-4888(mica) John J. Harris, Marion, North Carolina.
McHone Mine, Mitchell County, North Carolina

Reference is made to your letter of March 6.

The attached copy of the sketch map which accompanied the examination report has been marked with blue and red pencil to indicate the information requested in the third paragraph of your letter.

The Examiners were informed by the Applicant that he rents the necessary equipment. That is apparently what he meant by his statement "have air compressor, etc."

The Applicant's cost estimates probably reflect a lack of experience in mining. We consider his $30 per foot estimate to be unrealistic, and the report contains independent estimates based on our Examiners' experience. Is it policy to hold an Applicant to an unrealistically low estimate (really only a guess), when we are reasonably sure the work cannot be done properly at that cost? If so, we may expect many such contracts to result in (1) failure to complete because of excessive cost to the Operator or (2) sub-standard work in order to stay within the estimate.

The Examiners' recommendation for approval was "qualified" solely because of the relatively low recovery of strategic mica and low average value. The pegmatite presents a good target for a continuous mica zone, but naturally it does not merit as enthusiastic a recommendation as a pegmatite with a much higher yield of strategic mica or one with mica worth $15 or $20 per pound instead of the $6.78 per pound indicated by the three recent sales reported on page 2 of the report.

The Applicant was unable to point out identifiable property corners. He was told that this would be required, in the event that a contract is approved. Therefore, to avoid implying approval, I am not writing the Applicant for the tie-in. If a contract is to be approved, I suggest that the Washington office write direct to Mr. Harris, requesting a property survey and tie-in.

Robert A. Laurence

Robert A. Laurence

DMEA Form 7
(12-56)

OFFICIAL FILE COPY

Date	Surname	Code
3/4	Anderson	600
3/4	Houk	600
3/5	GCS	130
"	Johnson	110
"	Attendorf	100
3/6	C	220
		600

600

MAR 6 1958

Mr. Robert A. Laurence
Executive Officer, DMEA
Field Team, Region V
Room 13, Post Office Bldg.
Knoxville 2, Tennessee

Re: Docket No. DMEA-4888-Mica
John J. Harris
McMone Mine
Mitchell County, North Carolina

Dear Mr. Laurence:

We wish to comment on the Field Examination Report of February 13, 1958, on the subject property, and would appreciate clarification concerning some details which are not clear to us.

We note that the applicant owns most of the equipment necessary for the proposed work and that his estimate of costs amount to $30.00 per foot for both shaft sinking and drifting. Should not our estimate of costs be revised accordingly?

The map attached to the report does not give us all the information we would like to have, such as contour lines and locations, length and size of the central and western adits, and where the most recent work was done. We should also have a tie of the proposed work to the nearest identifiable property corner.

We also note that the Examiner's recommendation that exploration assistance be granted is qualified. We would like to have more detail on the reason for this reservation. Apparently it is based partly on the fact that the percent of strategic mica recovered to date is small and the price per pound is low and that better mica would be found in depth and along the footwall which have not been explored. What are the geological criteria for the premise that the proposed project has a fair chance of discovering significant amounts of strategic mica?

Processing of the application will be held in abeyance pending receipt of your comments on the above.

Sincerely yours,

George C. Selfridge

Chairman, Operating Committee (GCS)

Approved:

O. M. Bishop (GCS)

Member, Bureau of Mines

Thor H. Kiilsgaard (GCS)

Member, Geological Survey

WCAnderson:rsi 3/4/58
Copy to: Admr. R. File
Operating Committee
Mr. Kiilsgaard, 5222
Mr. Houk
Mr. Dietrich, 3061

8623

UNITED STATES
DEPARTMENT OF THE INTERIOR
BUREAU OF MINES
WASHINGTON 25, D. C.

February 27, 1958

OFFICIAL FILE COPY
DMEA
RECEIVED FEB 28 1958

DATE	INITIALS	CODE
2/28	C	220
2/28	[illegible]	600

Memorandum

To: Nonmetallic Minerals Division
Defense Minerals Exploration Administration

From: Chief, Branch of Ceramic and Fertilizer Materials

Subject: DMEA-4888 (mica)

Applicant: John J. Harris

Name and Location of Property: McHone Mine, Mitchell County, N. C.

Date of Field Team Report: 2/18/58

Date Rec'd. by Br. of Ceramic & Fertilizer Materials: 2/24/58

Field Team Recommendation: Recommend that exploration assistance be granted.

Comments:

1. This is an old mine with operations dating from 1910.

2. A mica-rich hanging wall zone in a pegmatite vein extends for a strike length of 200 feet.

3. Although some mica of strategic quality has been sold from the mine recently, the quality generally is not high.

Recommendation:

I concur with the recommendation of the field team that exploration assistance be granted.

W. F. Dietrich

W. F. Dietrich

OFFICIAL FILE COPY
DMEA
RECEIVED FEB 27 1958

DATE	INITIALS	CODE
2/27	C	220
2/28	Houk	600

IN REPLY REFER TO:

UNITED STATES
DEPARTMENT OF THE INTERIOR
GEOLOGICAL SURVEY
WASHINGTON 25, D. C.

February 26, 1958

Memorandum

To: L. G. Houk, Defense Minerals Exploration Administration

From: W. P. Williams, U. S. Geological Survey

Subject: Review of field examination report, DMEA 4888 (mica)
J. J. Harris, McHone mine, Mitchell County, N. C.

The examining team report that a zoned pegmatite dike containing strategic-grade mica is present on the applicant's property. The pegmatite has a mininum strike length of 200 feet.

The examiners do not seem to be enthusiastic about the grade of mica that might be found by an exploration project. Past mining shows that the percentage of strategic mica recovered has been small, and the price per pound low.

I agree with the recommendation of the Field Team for approval of the application, but with the reservation that the examiner's proposed project of winzing, drifting, and crosscutting appears to have only a fair chance of discovering significant amounts of strategic mica.

W. P. Williams

W. P. Williams

UNITED STATES
DEPARTMENT OF THE INTERIOR
DEFENSE MINERALS EXPLORATION ADMINISTRATION
ROOM 1[illegible] FED. BLDG.
KNOXVILLE 2, TENN.

February 18, 1958

DATE	INITIALS	CODE
2/20	C	220
2/24	2/3	130
2/24	C	220
2/28	wza	600

Memorandum

To: Operating Committee, DMEA, Washington, D. C.

From: Field Team, DMEA, Region V, Knoxville, Tennessee

Subject: Examination Report - Docket No. DMEA-4888 - Mica
John J. Harris, Route 1, Marion, North Carolina
McHone Mine, Mitchell County, North Carolina

Enclosed are the original and two copies of the subject examination report. There are also enclosed eight extra copies of the map.

The Field Team is in agreement with the recommendation of the field examiners.

Robert A. Laurence
Robert A. Laurence
Executive Officer

V. J. Lynch
V. J. Lynch, Member
Bureau of Mines

Enclosures 3

Reviewed by
DMEA OPERATING COMMITTEE
2-24-58
(date)

Q4 - Site Exam Rept

FILE COPY
DMEA
RECEIVED FEB 20 1958

DATE	INITIALS	CODE
2/24	2/3	130
		220

UNITED STATES
DEPARTMENT OF THE INTERIOR

DEFENSE MINERALS EXPLORATION ADMINISTRATION

FIELD EXAMINATION REPORT

On

DMEA-4888 (mica) McHONE MINE
Mitchell County, N. C.

F. G. Lesure, Geologist
Geological Survey

S. A. Feitler, Mining Engineer
Bureau of Mines

February 13, 1958

Reviewed by
DMEA OPERATING COMMITTEE
2-24-58
(date)

FIELD EXAMINATION REPORT
On

DMEA-4888 (mica) McHONE MINE
Mitchell County, N. C.

Applicant: John J. Harris, R#1, Marion, North Carolina

SUMMARY

The mica-rich hanging wall zone of a pegmatite vein has been explored in three adits at two levels for a strike length of 200 feet. Dark green mica of strategic quality from this mine has been sold recently. It is recommended that exploration assistance be granted.

INTRODUCTION

Location: The McHone mine is at an elevation of 3270 on the north slope of the southeast spur of Chalk Mountain, Mitchell County, North Carolina. The mine is 1.7 miles S49°W of BM 2518, Spruce Pine, N. C., (Spruce Pine, N.C. Quad. TVA 1,24:000). The mine can be reached by 4-wheel drive vehicle on a rough road 1.3 miles leading from N. C. State Highway 26.

Examination: The examination of the McHone mine was made January 8 and lasted 2 1/2 hours. Mr. Harris accompanied the Examiners. The area was covered with about an inch of snow and the ground was frozen to a depth of several inches.

Previous Operation: The McHone mine consists of 3 adits on two levels. According to Mr. Harris the lower and most northern adit was driven by Walter McHone about 1946. It slopes gently to the southwest and has about 2 feet of water in the SW half. This adit has been stoped for about 16 feet above the floor. The upper part of the stope breaks through the surface into dump material from the upper or central adit.

(5) where is central adit
(7) where is western adit - look + see

(1) [illegible]
(3) [illegible]
(4) [illegible]
(5) [illegible]
(6) where is [illegible]

This upper adit, which is much older, is reported to have been driven by Walter McHone's father about 1910(?). It is partly caved and the Applicant had the western adit driven recently to intersect the old workings. Records at the Spruce Pine Buying Depot shows the following sales made from the McHone mine:

Seller	Date	Lot	Pounds	Payment	Percent good stained
C.G.Clark	12-7-56	606	9.19	$76.07	18.59
" " "	2-18-57	841	4.62	19.05	10.49
W. McHone	10-21-55		5.37	34.93	24.39
			19.18	130.05	

At present there is a compressor on the property but no other equipment or buildings. Water is available and an electric power line is supposed to be installed nearby in a few months. Mr. Harris has had some prospecting experience but not much mining experience. He appears to be capable and willing to learn. He also intends to hire more experienced helpers.

GEOLOGY

A zoned pegmatite dike with a minimum strike length of 200 feet is partly exposed in the upper and lower adits. The dike strikes about N75°E in the western half and N40°E in the eastern. The dip is a constant 75°NW. The pegmatite is apparently a fracture filling in fine-to medium-grained "alaskite." Several deeply weathered mica schist inclusions in the "alaskite" are exposed in the back of the upper, central adit and above the portal in the western adit. The pegmatite and "alaskite" are partly weathered near the surface but hard and fresh at depth.

The pegmatite has a hanging wall zone of plagioclase,

quartz, and muscovite. This zone is fine to coarsely-grained and ranges in thickness from 1 to 2 feet. Below it is a core, or possibly intermediate zone, of coarse-grained perthite, plagioclase, quartz, and accessory muscovite. The footwall of the pegmatite is not exposed.

Muscovite in the hanging wall zone is dark green and occurs in books ranging from 2"x 3" to 5" x 6". Much of it is ruled, wavy, and stained. Although some mica of strategic quality has been sold from the mine recently, the quality generally is not high.

RECOMMENDATIONS

Although the pegmatite is mica rich and presents a good target, the percent of strategic mica recovered is small and the price per pound is low. For these reasons the Examiners' recommendation that exploration assistance be granted is qualified. The present workings have proved a strike length of 200 feet, but little work has been done in a vertical range. As far as can be determined the footwall has not been explored. Additional work through the lower adit is not recommended because of caving to the surface and the short vertical difference from the upper workings. A suitable exploration program would consist of a 45-foot winze sunk at the lowest point in the upper workings and 80 feet of drifting and crosscutting to explore the hanging wall and footwall.

Estimated Costs:

Construct

Toolhouse	$75.00	
Powder magazine	25.00	
Detonator magazine	15.00	
		$115.00

Estimated Costs con't-

To prepare winze site, drive 8 feet of raise 5 x 6 feet in cross section at approximately 65° and cut a wedge shaped rope channel 3 feet wide in the back from the portal to the top of the raise.

Raise 8 ft @ $20/ft.....	$160.00	
Rope channel 262 c.f. @ 50¢/c.f.	131.00	
Total winze site preparation.....		$291.00

Sink 45 feet of two compartment winze 5 x 7 ft in cross section on the pegmatite (30 shifts).

use 1.6 ft/shift = 28 shifts

Labor:

1 - Foreman-Miner	$14/shift	
1 - Hoistman	12/ "	
1 - Laborer	8/ "	
Per 8 hr. shift.....	$34.00	
Total labor ~~30~~ 28 shifts @ $34		$1,020.00 952.00

Equipment rental

1 - Compressor @ $150/Mo.	$225.00	
1 - Hoist at $50/Mo.	75.00	
1 - Rock drill w/airhose @ $40/Mo.	60.00	
1 - Sump pump @ $40/Mo.	60.00	
Total equipment rental.....		420.00

280/mo 395.00

Supplies, Taxes & Insurance

Gasoline & Oil	$101.25	
Explosives	180.00	
Drill steel	81.00	
Timber- 1M b.f.	65.00	
Small tools and Misc.	90.00	
Sales Tax	16.00	
Social Sec. & Ins.	122.00	
Total supplies, etc.		655.25
Total estimated cost of winze.....		$2,095.25 1982.25

Estimated cost/ft winze $46.56. use $45.00/ft.

Estimated costs cont'd

Drift and/or crosscut 80 feet from or near the shaft bottom, 5 x 7 feet in cross section (40 shifts)

2.2'/sh. = 37 shifts

Labor:

1 - Foreman-Miner	$14/shift
1 - Hoistman	12/ "
1 - Laborer	8/ "
Per 8 hour shift.....	$34

Total labor 40 shifts..... $1,360.00

37 shifts

1258.00

Equipment (rental)

1 - Compressor @ $150/Mo.	$300.00
1 - Hoist @ $50/Mo.	100.00
1 - Rock drill w/hose @ $40/Mo.	80.00
1 - Sump Pump @ $40/Mo.	80.00
1 - Jackleg @ $25/Mo.	50.00

Total equipment-rental..... 610.00

$250/mo

500.00

Supplies, Tax and Insurance

Gasoline and oil	180.00
Explosives	320.00
Drill steel	112.00
Small tools & Misc.	120.00
Sales tax	22.00
Soc. Sec. & Ins.	163.00

Total supplies, etc.... 917.00

Total estimated cost of drift..... $2,887.00

Esti. cost/ft of drift $36.09 - use $34/ft.

2675.00

SUMMARY OF ESTIMATES

Construction	$115.00
Winze site preparation	291.00
Winze - 45 feet	2,095.25
Drift - 80 feet	2,887.00

Total estimated cost of project..... $5,388.25

S. A. Feitler,
Mining Engineer, USBM

Frank G. Lesure, Geologist
Geological Survey

DMEA Form 7
(12-56)

OFFICIAL FILE COPY

Date	Surname	Code
12/11	Anderson	600
12/11	Houk	600
12/13	Selbridge	130
12/13	Houk	130
12/13	Nelson	130
"	Brown	110
"	Mittendorf	100
		220

600

DEC 13 1957

Mr. John J. Harris
Route #1
Marion, North Carolina

Re: Docket No. DMEA-4838-Mica
John J. Harris
McHone Mine
Mitchell County, North Carolina

Dear Mr. Harris:

Your application for assistance in exploring the subject property has been reviewed by the Division of Nonmetallic Minerals of the Defense Minerals Exploration Administration and has been referred to Mr. Robert A. Laurence, Executive Officer, DMEA Field Team, Region V, Room 13, Post Office Building, Knoxville 2, Tennessee, for further consideration and possibly a field examination.

The Regional Office will contact you at an early date if an examination is to be made. Any assistance you may give the members of the Field Team during the examination will be appreciated.

Sincerely yours,

C. O. Mittendorf (for)

Administrator

WCAnderson:gad 12/11/57
Copy to: Admr. R. File
Operating Committee
Field Team, Region V
Mr. Kiilsgaard, 5222
Mr. Dietrich, 3061
Mr. Houk

8623

DMEA Form 7
(12-56)

OFFICIAL FILE COPY

Date	Surname	Code
12/11	Anderson	600
12/11	Houk	600
12/13	[illegible]	130
"	Johnson	110
"	Hattendorf	100
12/16	C O	220
		600

600

DEC 13 1957

Mr. Robert A. Laurence
Executive Officer, DMEA
Field Team, Region V
Room 13, Post Office Bldg.
Knoxville 2, Tennessee

Re: Docket No. DMEA-4888-Mica
John J. Harris
McHone Mine
Mitchell County, North Carolina

Dear Mr. Laurence:

Please review the subject application and arrange for a field examination if you deem it necessary.

Copies of memoranda dated December 5 and 9, 1957, by Mr. N. E. Nelson, USGS, and Mr. H. F. Dietrich, USBM, respectively, relating to the project are enclosed. There is also enclosed a copy of the application for the use of the Field Team.

In the event a contract is recommended, we will need the book and page numbers of the deed recording at the County Office and a tie of the proposed work to the nearest property line or corner.

Sincerely yours,

George C. Selfridge

Chairman, Operating Committee (HB)

Approved:

Frank D. Lamb (HB)
Member, Bureau of Mines

N. E. Nelson (HB)
Member, Geological Survey

WCAnderson:gad 12/11/57
Copy to: Admr. R. File
Operating Committee
Mr. Kiilsgaard, 5222
Mr. Dietrich, 3061
Mr. Houk

Enclosures 5

8623

OFFICIAL FILE COPY
DMEA
RECEIVED DEC 10 1957
INITIALS | CODE
12/10 | gb | 220
600

UNITED STATES
DEPARTMENT OF THE INTERIOR
BUREAU OF MINES
WASHINGTON 25, D. C.

December 9, 1957

Memorandum

To: ✓ Nonmetallic Minerals Division
Defense Minerals Exploration Administration

From: Chief, Branch of Ceramic and Fertilizer Materials

Subject: DMEA-4888 (mica)

Applicant: John J. Harris

Name and Location of Property: McHone Mine, Mitchell County, N. C.

Date Application Rec'd. by Br. of Ceramic & Fertilizer Materials: 12/6/57

Comments:

1. Applicant states he has prospected this site with "excellent results."

2. Cost estimates are considerably lower than equivalent projects in area.

3. Although it would be desirable for the applicant to furnish more complete information, it appears that a visit by an examiner would furnish more useful data.

Recommendation:

It is recommended that the field team visit this mine when in that vicinity to ascertain if an exploration project is justified. If so, the field team and applicant should agree on a definite plan of exploration on a unit-cost basis.

W. F. Dietrich

W. F. Dietrich

ORIGINAL FILE COPY
DMEA
RECEIVED DEC 5 1957
INITIALS
C 320
Hart 600

IN REPLY REFER TO:

UNITED STATES
DEPARTMENT OF THE INTERIOR
GEOLOGICAL SURVEY
WASHINGTON 25, D. C.

December 5, 1957
Re: DMEA 4888
John J. Harris
McHone (Spruce Pine) mine
Mitchell County, North Carolina
$5,000.00 - Mica

Memorandum

To: L. G. Houk, Defense Minerals Exploration Administration

From: N. E. Nelson, U. S. Geological Survey

Subject: Review of application

The applicant requests assistance in exploring a pegmatite by 50 feet of sinking and 100 feet of drifting. The estimated costs of the sinking and drifting are $30.00 per foot.

The applicant says prospecting has shown excellent results.

Referral of the application to the Field Team is recommended.

N. E. Nelson

N. E. Nelson

RECEIVED

12/5 C 220
12/5 Home 600

December 3, 1957

Mr. J. J. Harris
Route # 1
Marion, North Carolina

Dear Mr. Harris:

Your application for exploration aid on the McHone Mine, Mitchell County, North Carolina has been forwarded to our Washington office in accordance with established procedure.

You will be notified in advance if a field examination is to be made.

Very truly yours,

Robert A. Laurence
Executive Officer, DMEA
Region V

VJL/zm
cc
Opr. Com.
Lynch
Files

UNITED STATES
DEPARTMENT OF THE INTERIOR
DEFENSE MINERALS EXPLORATION ADMINISTRATION
WASHINGTON 25, D. C.

December 4, 1957

Mr. John J. Harris
Route #1
Marion, North Carolina

Dear Mr. Harris:

Subject: DMEA-4888

Your application for exploration assistance, dated November 26, 1957 submitted to our office at Knoxville, Tennessee has been assigned Docket Number DMEA-4888 and referred to the Nonmetallic Minerals Division in the Washington office. Kindly identify all future correspondence relating to your application by this Docket Number.

Sincerely yours,

Allen S. Dakan, Director
Operations Control and
Statistics Division

Copy to:

Region V

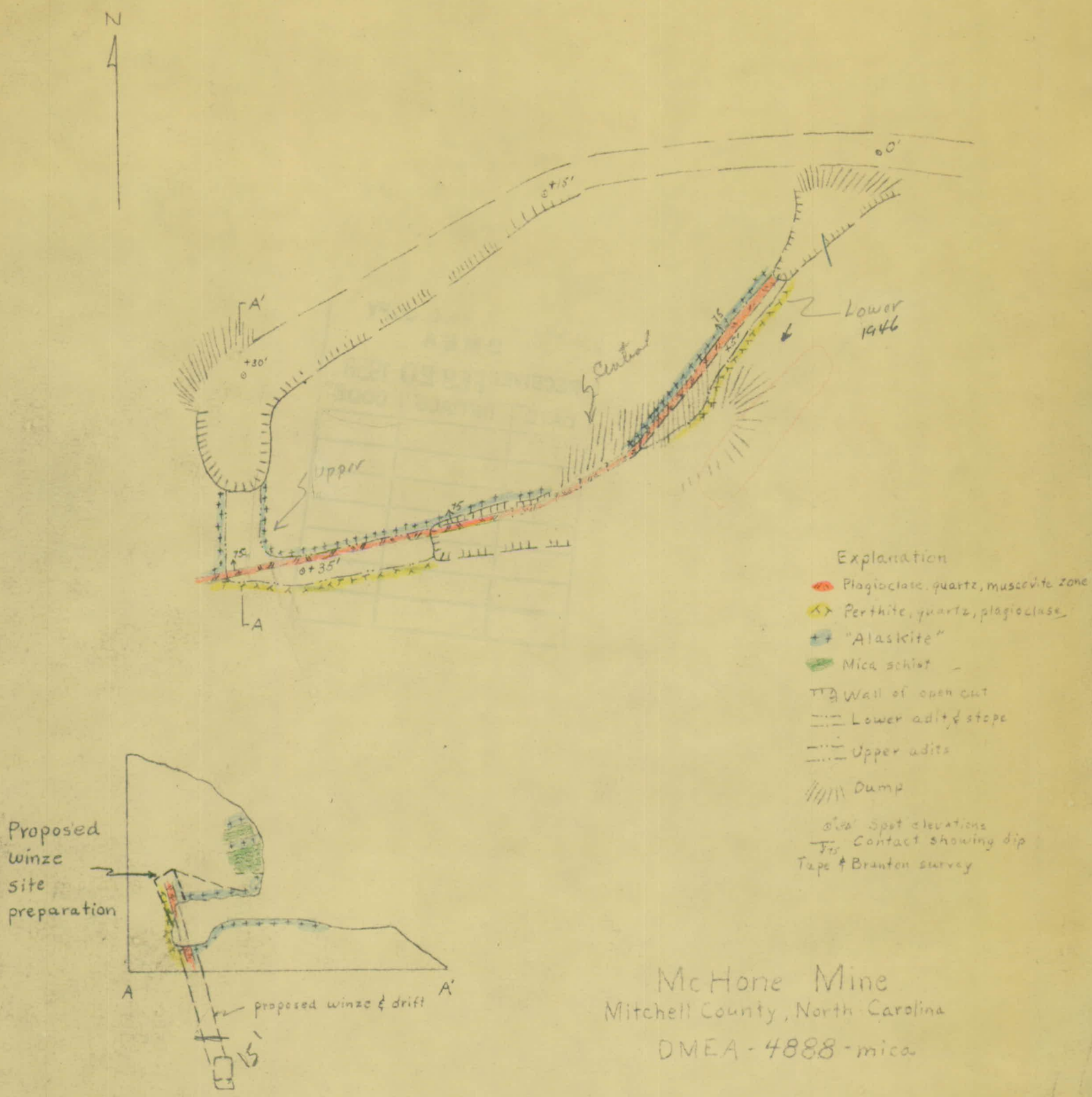
N
A'
A
+30'
+15'
0'
+35'
Upper
Central
Lower
1946
Explanation
Plagioclase, quartz, muscovite zone
Perthite, quartz, plagioclase
"Alaskite"
Mica schist
Wall of open cut
Lower adit & stope
Upper adits
Dump
Spot elevations
Contact showing dip
Tape & Brunton survey
Proposed winze site preparation
proposed winze & drift
McHone Mine
Mitchell County, North Carolina
DMEA - 4888 - mica
Scale
0 20 40 feet

FGL 2/08

ORIGINAL COPY
DMEA
RECEIVED FEB 20 1958
DATE | INITIALS | CODE

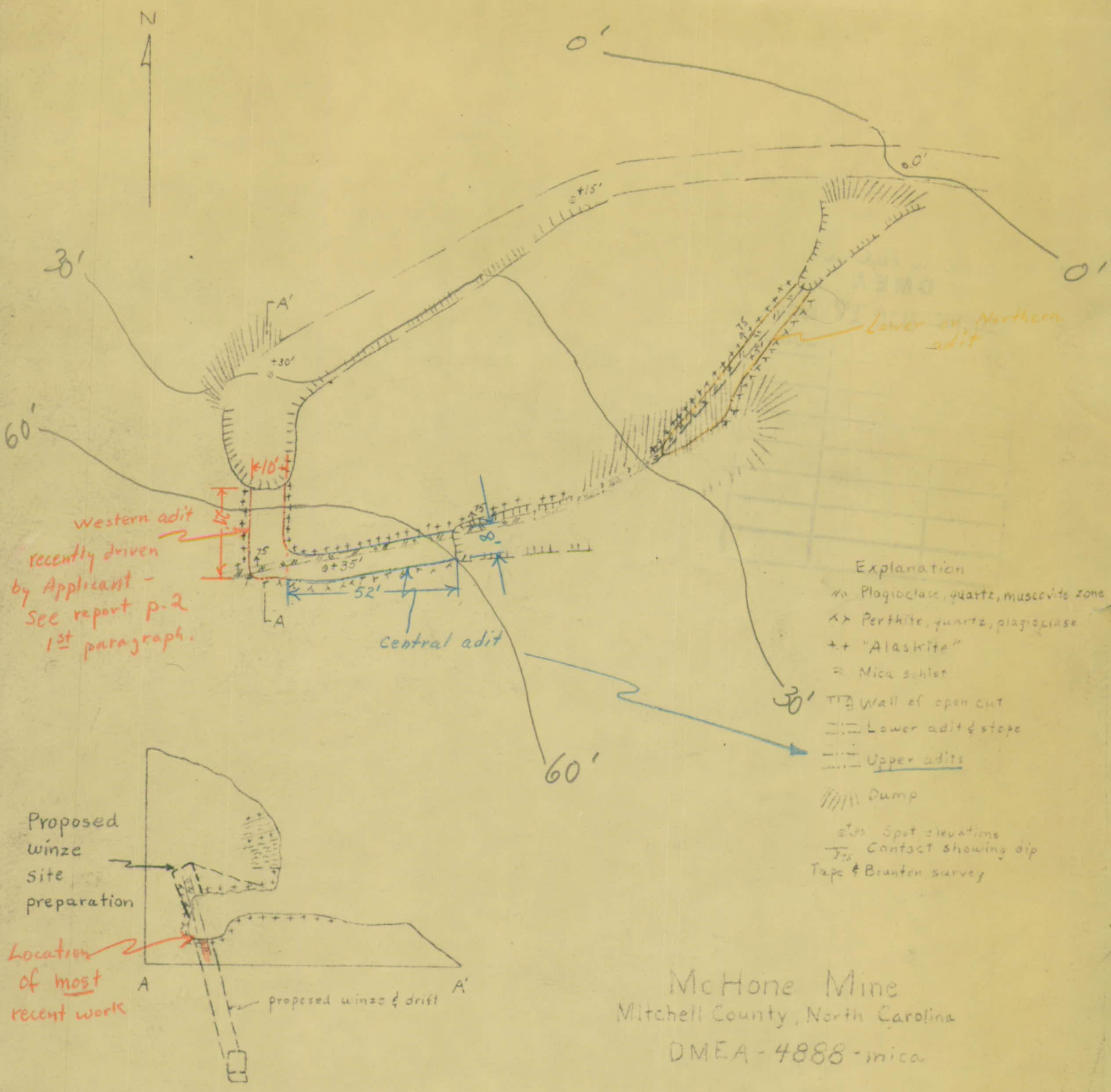
N
0'
0'
0'
30'
60'
60'
30'
+15'
+30'
A'
A
10'
Western adit
recently driven by Applicant - See report p. 2 1st paragraph.
+35'
52'
Central adit
Lower or Northern adit
Explanation
Plagioclase, quartz, muscovite zone
Perthite, quartz, plagioclase
"Alaskite"
Mica schist
Wall of open cut
Lower adit & stope
Upper adits
Dump
Spot elevations
Contact showing dip
Tape & Brunton survey
Proposed winze site preparation
Location of most recent work
A
A'
proposed winze & drift
McHone Mine
Mitchell County, North Carolina
DMEA-4888-mica
Scale
0
20
40 feet

FGL 2/88

OFFICIAL FILE COPY
DMEA
RECEIVED MAR 17 1958

DATE	INITIALS	CODE