DMA Form 1

DEFENSE MINERALS ADMINISTRATION
Control Slip

CONTROLLED DOCUMENT

DMA Docket No. 3529

DO NOT DETACH THIS SLIP

Action on this document is recorded and controlled in Reports and Records Branch. Any movement of this document between divisions or offices of DMA or movement outside DMA must be reported to the Reports and Records Branch. Actions taken that affect status of the case must also be reported.

This document has been recorded as

Exploration Assistance

Any action taken to change the type of request for assistance must be promptly reported to the Reports and Records Branch. Use DMA Form 2 for submitting these reports.

Cys to USBM, USGS, & Reg.

Routing Slip

To:	600	Date	11/13/54
To:	Oper Comm	Date	10-22-54
To:	Oper Comm	Date	11-30-54
To:		Date	
To:		Date	
To:		Date	
To:		Date	
To:		Date	
To:		Date	
To:		Date	
To:		Date	
To:		Date	
To:		Date	
To:		Date	

DO NOT DETACH

CONTROLLED DOCUMENT

FILE COPY
Surname:
Anderson
Houk
Hedges
Kiilsgaard
Selfridge
F E Johnson

UNITED STATES
DEPARTMENT OF THE INTERIOR
DEFENSE MINERALS EXPLORATION ADMINISTRATION
WASHINGTON 25, D. C. 600

DEC - 2 1954

Mr. John Phillips

Spruce Pine, North Carolina

Re: Docket No. DMEA-3529 - Mica
Susie Phillips Prospect
Mitchell County, North Carolina

Dear Mr. Phillips:

Your application for aid for an exploration project and other reports available to us in Washington relating to the subject property have been reviewed.

Projects approved by the Defense Minerals Exploration Administration must, in its judgment, show definite promise of yielding materials of acceptable grade in quantities that will significantly improve the mineral supply position for the National Defense Program.

Careful study of all our information indicates to us that the probability of disclosing significant reserves of mica by your proposed program is not sufficiently promising to justify Government participation. We regret to advise you, under these circumstances, that your application for exploration assistance is denied.

We wish to thank you for your interest in the Defense Minerals Program and for bringing your property to our attention.

Sincerely yours,

C. O. Mittendorf

Administrator

WCAnderson:ad 11/29/54
Copy to: Admr. R. File
Docket
Operating Committee
Field Team, Region VII
Mr. Kiilsgaard, 5222
Mr. Dietrich, 3061
Mr. Houk

R.C.S.

UNITED STATES
DEPARTMENT OF THE INTERIOR
DEFENSE MINERALS EXPLORATION ADMINISTRATION
WASHINGTON 25, D. C. 600

November 29, 1954

Memorandum

To: Administrator

From: Nonmetallic Minerals Division

Subject: A denial of exploration assistance and summary report.

By: Walter C. Anderson

1. Docket No. DMEA-3529 - Mica
Property: Susie Phillips Prospect
Mitchell County, North Carolina

Applicant: John Phillips
Spruce Pine, North Carolina

Application: Form-MF-103, date received October 13, 1954.
Work proposed: Sink 90 feet of shaft and drive 100 feet of drift.
Amount requested: $8,200.00.
No contract: Application denied.

2. Comments:

Geological premise: No indications that strategic grade mica will be found in the deposit.

Geological criteria:
1. Pegmatite - thickness not known.
2. Mica - non-strategic grade, "A-type" and badly mineral-stained and mottled.
3. Past mining - chiefly feldspar.

Future possibilities: None for production of strategic grade mica.

Recommendations: The Nonmetallic Minerals Division concurs in the Field Team's recommendation to deny the application. The Geological Survey and the Bureau of Mines are in agreement.

DMEA 3529

Mica

Defense Minerals Administration
RECEIVED
OCT 14 1954

These forms to be added to the application submitted October 11, 1954 for Exploration loan on Susie Phillips Prospect, Mitchell County, N. C. Applied for in Name of John Phillips, Spruce Pine, N. C.

MF-203
(Revised July 1, 1954)

OWNER'S CONSENT TO LIEN

WHEREAS, the undersigned, as owner, co-owner, lessor, or seller has an interest in certain property in the State of North Carolina, County of Mitchell, described as follows:1/

B eginning at the center of what is known as the Susie Phillips Prospect and running North 250'; thence West 250', thence South 500', thence East 500', thence North 500', thence West 250' to the beginning.

which is the subject of a proposed exploration project contract, hereinafter called the "contract", between the United States of America, hereinafter called the "Government", and

2/ John Phillips

hereinafter called the "Operator"; and

WHEREAS, under the provisions of said contract the Government is entitled to a percentage royalty on production and to other rights and equities which do or may conflict with or be adverse to the rights of the undersigned:

NOW THEREFORE, the undersigned, in consideration of said contract and as an inducement to the Government to enter into same, undertakes and agrees as follows:

1. The Government's equity in and right to dismantle, sever, take possession of, and remove and dispose of facilities, buildings, fixtures, equipment, or other items as provided in the contract or any amendment thereof shall prevail over and be prior and superior to any conflicting or adverse rights of the undersigned, and the Government is authorized to enter upon the land for such purposes.

2. To secure the payment to the Government of the percentage royalty on production3/ provided for under the terms of said exploration project contract or any amendment thereof there is hereby granted to the Government a lien upon the land above referred to and upon any production of minerals therefrom until said royalty is fully paid or ten years have elapsed from the date of the contract, whichever occurs first.

1/ Either (a) insert the legal description of the land, or (b) strike out the words "as follows" and insert "in a lease [or contract, deed, or other document] dated _____, and recorded in book _____ page _____ official records of said county." If (b) is used, the book and page of recordation cannot be dispensed with. If the space provided is insufficient, use an Annex, and refer to the Annex in the space.

2/ Insert the name of the Operator as it will appear in the exploration project contract.

3/ Mining or production from the land is not required, and in the absence of production there is no obligation to repay the Government.

(OVER)

3. The undersigned shall commit no act nor assert any claim that may contravene or conflict with the lien, claim, or rights of the Government under the provisions of said contract. This agreement shall be binding upon the heirs, executors, administrators, successors, and assigns of the undersigned.

4. Changes and added provisions _____

_____

_____

_____

Dated this 12th day of October, 1954.

R B Phillips [Seal] Bakersville, N. C.

_____ [Seal]

_____ [Seal]

MF-203
(Revised July 1, 1954)

OWNER'S CONSENT TO LIEN

WHEREAS, the undersigned, as owner, co-owner, lessor, or seller has an interest in certain property in the State of North Carolina, County of Mitchell described as follows:1/

Beginning at the center of what is known as the Susie Phillips Prospect and running North 250'; thence West 250', thence South 500', thence East 500', thence North 500', thence West 250' to the beginning.

which is the subject of a proposed exploration project contract, hereinafter called the "contract", between the United States of America, hereinafter called the "Government", and

2/ John Phillips

hereinafter called the "Operator"; and

WHEREAS, under the provisions of said contract the Government is entitled to a percentage royalty on production and to other rights and equities which do or may conflict with or be adverse to the rights of the undersigned:

NOW THEREFORE, the undersigned, in consideration of said contract and as an inducement to the Government to enter into same, undertakes and agrees as follows:

1. The Government's equity in and right to dismantle, sever, take possession of, and remove and dispose of facilities, buildings, fixtures, equipment, or other items as provided in the contract or any amendment thereof shall prevail over and be prior and superior to any conflicting or adverse rights of the undersigned, and the Government is authorized to enter upon the land for such purposes.

2. To secure the payment to the Government of the percentage royalty on production3/ provided for under the terms of said exploration project contract or any amendment thereof there is hereby granted to the Government a lien upon the land above referred to and upon any production of minerals therefrom until said royalty is fully paid or ten years have elapsed from the date of the contract, whichever occurs first.

1/ Either (a) insert the legal description of the land, or (b) strike out the words "as follows" and insert "in a lease [or contract, deed, or other document] dated _____, and recorded in book _____ page _____ official records of said county." If (b) is used, the book and page of recordation cannot be dispensed with. If the space provided is insufficient, use an Annex, and refer to the Annex in the space.

2/ Insert the name of the Operator as it will appear in the exploration project contract.

3/ Mining or production from the land is not required, and in the absence of production there is no obligation to repay the Government.

(OVER)

3. The undersigned shall commit no act nor assert any claim that may contravene or conflict with the lien, claim, or rights of the Government under the provisions of said contract. This agreement shall be binding upon the heirs, executors, administrators, successors, and assigns of the undersigned.

4. Changes and added provisions _____

_____

_____

_____

Dated this 12th day of October, 1954.

R B Phillips [Seal] Bakersville, N. C.

_____ [Seal]

_____ [Seal]

MF-203
(Revised July 1, 1954)

OWNER'S CONSENT TO LIEN

WHEREAS, the undersigned, as owner, co-owner, lessor, or seller has an interest in certain property in the State of North Carolina, County of Mitchell described as follows:1/

Beginning at the center of what is known as the Sudie Phillips Prospect and running North 250'; thence West 250', thence South 500', thence East 500', thence North 500', thence West 250' to the beginning.

which is the subject of a proposed exploration project contract, hereinafter called the "contract", between the United States of America, hereinafter called the "Government", and

2/ John Phillips

hereinafter called the "Operator"; and

WHEREAS, under the provisions of said contract the Government is entitled to a percentage royalty on production and to other rights and equities which do or may conflict with or be adverse to the rights of the undersigned:

NOW THEREFORE, the undersigned, in consideration of said contract and as an inducement to the Government to enter into same, undertakes and agrees as follows:

1. The Government's equity in and right to dismantle, sever, take possession of, and remove and dispose of facilities, buildings, fixtures, equipment, or other items as provided in the contract or any amendment thereof shall prevail over and be prior and superior to any conflicting or adverse rights of the undersigned, and the Government is authorized to enter upon the land for such purposes.

2. To secure the payment to the Government of the percentage royalty on production3/ provided for under the terms of said exploration project contract or any amendment thereof there is hereby granted to the Government a lien upon the land above referred to and upon any production of minerals therefrom until said royalty is fully paid or ten years have elapsed from the date of the contract, whichever occurs first.

1/ Either (a) insert the legal description of the land, or (b) strike out the words "as follows" and insert "in a lease [or contract, deed, or other document] dated _____, and recorded in book _____ page _____ official records of said county." If (b) is used, the book and page of recordation cannot be dispensed with. If the space provided is insufficient, use an Annex, and refer to the Annex in the space.

2/ Insert the name of the Operator as it will appear in the exploration project contract.

3/ Mining or production from the land is not required, and in the absence of production there is no obligation to repay the Government.

(OVER)

3. The undersigned shall commit no act nor assert any claim that may contravene or conflict with the lien, claim, or rights of the Government under the provisions of said contract. This agreement shall be binding upon the heirs, executors, administrators, successors, and assigns of the undersigned.

4. Changes and added provisions _____

_____

_____

_____

Dated this 12th day of October, 1954.

R. B. Phillips [Seal] Beloreville, N. C.

_____ [Seal]

_____ [Seal]

MF-203
(Revised July 1, 1954)

OWNER'S CONSENT TO LIEN

WHEREAS, the undersigned, as owner, co-owner, lessor, or seller has an interest in certain property in the State of North Carolina, County of [illegible], described as follows:1/

D [illegible] at the center of what is known as the [illegible] Property and running North 250', thence West 250', thence S [illegible] 500', thence East 500', thence North 500', thence West 250' to the beginning.

which is the subject of a proposed exploration project contract, hereinafter called the "contract", between the United States of America, hereinafter called the "Government", and

2/ John Phillips

hereinafter called the "Operator"; and

WHEREAS, under the provisions of said contract the Government is entitled to a percentage royalty on production and to other rights and equities which do or may conflict with or be adverse to the rights of the undersigned:

NOW THEREFORE, the undersigned, in consideration of said contract and as an inducement to the Government to enter into same, undertakes and agrees as follows:

1. The Government's equity in and right to dismantle, sever, take possession of, and remove and dispose of facilities, buildings, fixtures, equipment, or other items as provided in the contract or any amendment thereof shall prevail over and be prior and superior to any conflicting or adverse rights of the undersigned, and the Government is authorized to enter upon the land for such purposes.

2. To secure the payment to the Government of the percentage royalty on production3/ provided for under the terms of said exploration project contract or any amendment thereof there is hereby granted to the Government a lien upon the land above referred to and upon any production of minerals therefrom until said royalty is fully paid or ten years have elapsed from the date of the contract, whichever occurs first.

1/ Either (a) insert the legal description of the land, or (b) strike out the words "as follows" and insert "in a lease [or contract, deed, or other document] dated _____, and recorded in book _____ page _____ official records of said county." If (b) is used, the book and page of recordation cannot be dispensed with. If the space provided is insufficient, use an Annex, and refer to the Annex in the space.

2/ Insert the name of the Operator as it will appear in the exploration project contract.

3/ Mining or production from the land is not required, and in the absence of production there is no obligation to repay the Government.

(OVER)

3. The undersigned shall commit no act nor assert any claim that may contravene or conflict with the lien, claim, or rights of the Government under the provisions of said contract. This agreement shall be binding upon the heirs, executors, administrators, successors, and assigns of the undersigned.

4. Changes and added provisions _____

_____

_____

_____

Dated this 20th day of October, 195 4.

R B Phillips [Seal] Colorado, D. C.

_____ [Seal]

_____ [Seal]

MF-203
(Revised July 1, 1954)

OWNER'S CONSENT TO LIEN

WHEREAS, the undersigned, as owner, co-owner, lessor, or seller has an interest in certain property in the State of _____, County of _____, described as follows:1/

Beginning at the center of what is known as the Susie Phillips Prospect and running North 250', thence West 250', t ence South 500', thence East 500', thence North 500', thence West 250' to the beginning.

which is the subject of a proposed exploration project contract, hereinafter called the "contract", between the United States of America, hereinafter called the "Government", and

2/ John Phillips

hereinafter called the "Operator"; and

WHEREAS, under the provisions of said contract the Government is entitled to a percentage royalty on production and to other rights and equities which do or may conflict with or be adverse to the rights of the undersigned:

NOW THEREFORE, the undersigned, in consideration of said contract and as an inducement to the Government to enter into same, undertakes and agrees as follows:

1. The Government's equity in and right to dismantle, sever, take possession of, and remove and dispose of facilities, buildings, fixtures, equipment, or other items as provided in the contract or any amendment thereof shall prevail over and be prior and superior to any conflicting or adverse rights of the undersigned, and the Government is authorized to enter upon the land for such purposes.

2. To secure the payment to the Government of the percentage royalty on production3/ provided for under the terms of said exploration project contract or any amendment thereof there is hereby granted to the Government a lien upon the land above referred to and upon any production of minerals therefrom until said royalty is fully paid or ten years have elapsed from the date of the contract, whichever occurs first.

1/ Either (a) insert the legal description of the land, or (b) strike out the words "as follows" and insert "in a lease [or contract, deed, or other document] dated _____, and recorded in book _____ page _____ official records of said county." If (b) is used, the book and page of recordation cannot be dispensed with. If the space provided is insufficient, use an Annex, and refer to the Annex in the space.

2/ Insert the name of the Operator as it will appear in the exploration project contract.

3/ Mining or production from the land is not required, and in the absence of production there is no obligation to repay the Government.

(OVER)

3. The undersigned shall commit no act nor assert any claim that may contravene or conflict with the lien, claim, or rights of the Government under the provisions of said contract. This agreement shall be binding upon the heirs, executors, administrators, successors, and assigns of the undersigned.

4. Changes and added provisions _____

_____

_____

_____

Dated this 12th day of October, 1954.

R B Phillips [Seal] Bakersville, N. C.

_____ [Seal]

_____ [Seal]

MF-203
(Revised July 1, 1954)

OWNER'S CONSENT TO LIEN

WHEREAS, the undersigned, as owner, co-owner, lessor, or seller has an interest in certain property in the State of _____, County of _____, described as follows:1/

Beginning at the center of that is known as the Susie Phillips Prospect and running North 250', thence West 250', t ence South 500', thence East 500', thence North 500', thence West 250' to the beginning.

which is the subject of a proposed exploration project contract, hereinafter called the "contract", between the United States of America, hereinafter called the "Government", and

2/ John Phillips

hereinafter called the "Operator"; and

WHEREAS, under the provisions of said contract the Government is entitled to a percentage royalty on production and to other rights and equities which do or may conflict with or be adverse to the rights of the undersigned:

NOW THEREFORE, the undersigned, in consideration of said contract and as an inducement to the Government to enter into same, undertakes and agrees as follows:

1. The Government's equity in and right to dismantle, sever, take possession of, and remove and dispose of facilities, buildings, fixtures, equipment, or other items as provided in the contract or any amendment thereof shall prevail over and be prior and superior to any conflicting or adverse rights of the undersigned, and the Government is authorized to enter upon the land for such purposes.

2. To secure the payment to the Government of the percentage royalty on production3/ provided for under the terms of said exploration project contract or any amendment thereof there is hereby granted to the Government a lien upon the land above referred to and upon any production of minerals therefrom until said royalty is fully paid or ten years have elapsed from the date of the contract, whichever occurs first.

1/ Either (a) insert the legal description of the land, or (b) strike out the words "as follows" and insert "in a lease [or contract, deed, or other document] dated _____, and recorded in book _____ page _____ official records of said county." If (b) is used, the book and page of recordation cannot be dispensed with. If the space provided is insufficient, use an Annex, and refer to the Annex in the space.

2/ Insert the name of the Operator as it will appear in the exploration project contract.

3/ Mining or production from the land is not required, and in the absence of production there is no obligation to repay the Government.

(OVER)

3. The undersigned shall commit no act nor assert any claim that may contravene or conflict with the lien, claim, or rights of the Government under the provisions of said contract. This agreement shall be binding upon the heirs, executors, administrators, successors, and assigns of the undersigned.

4. Changes and added provisions _____

_____

_____

_____

Dated this 12th day of October, 1954.

R. B. Phillips [Seal] Bakersville, N. C.

_____ [Seal]

_____ [Seal]

UNITED STATES
DEPARTMENT OF THE INTERIOR
BUREAU OF MINES
WASHINGTON 25, D. C.

RECEIVED NOV 23 1954

November 22, 1954

Memorandum

To: Nonmetallic Minerals Division
Defense Minerals Exploration Administration

From: Chief, Ceramic and Fertilizer Materials Branch

Subject: DMEA-3529 (mica)

Applicant: John Phillips

Name and Location of Property: Susie Phillips Mine
Mitchell County, North Carolina

Date of Field Team Report: November 9, 1954

Date Rec'd. by Ceramic & Fertilizer Mtls. Br.: November 16, 1954

Field Team Recommendation:

1. Denial.

Comments:

1. Mining has been done at this mine, mainly for feldspar, and mica obtained was of poor quality.

Recommendation:

I concur in the field team's recommendation to deny this project on the basis that the mica is poor in quality and there is little likelihood of obtaining strategic mica.

W. F. Dietrich

W. F. Dietrich

IN REPLY REFER TO:

Defense Minerals Administration
RECEIVED
NOV 16 1954

UNITED STATES
DEPARTMENT OF THE INTERIOR
GEOLOGICAL SURVEY
WASHINGTON 25, D. C.

November 16, 1954

Memorandum

REVIEW OF FIELD TEAM REPORT ON APPLICATION DMEA-3529 (Mica)

To: L. G. Houk, Defense Minerals Exploration Administration

From: R. D. Trace, U. S. Geological Survey

Applicant: John Phillips

Name of property: Susie Phillips prospect

Location of property: Mitchell County, North Carolina

Date of Field Team Report: November 8, 1954

Authorship of Field Team Report: K. H. Teague and D. H. Amos, U.S.G.S., and L. E. Shirley, U.S.B.M.

Field Team's recommendation: Deny exploration assistance.

ACTION RECOMMENDED: Follow Field Team recommendation.

Bob Trace

R. D. Trace

UNITED STATES
DEPARTMENT OF THE INTERIOR
DEFENSE MINERALS EXPLORATION ADMINISTRATION
ROOM WASHINGTON 25, D. C. POST OFFICE BLDG.
KNOXVILLE 2, TENN.

November 9, 1954

DEPT OF THE INTERIOR
U.S. Geol. Survey
RECEIVED
NOV 12 1954

Memorandum

To: Operating Committee, DMEA - Washington

From: Field Team, D. M. E. A. Region VII

Subject: DMEA-3529, Susie Phillips Mine, Field Examination Report (mica)

Transmitted are four copies of the subject report.

The Field Team concurs with the field examiners that this application should be denied.

D. H. Amos, For R. A. Laurence
EXECUTIVE OFFICER
DMEA REGION VII

Wm. A. Beck By: gm
Wm. A. Beck, for V. J. Lynch
U. S. Bureau of Mines

Reviewed by
DMEA OPERATING COMMITTEE
11-17-54
(date)

UNITED STATES
DEPARTMENT OF THE INTERIOR

DEFENSE MINERALS EXPLORATION ADMINISTRATION

REPORT OF EXAMINATION BY THE FIELD TEAM, REGION VII

ON

DMEA-3529

DMEA# SUSIE PHILLIPS PROSPECT (Mica)
(Robert Phillips Mine)
Mitchell County, N. C.

DEPARTMENT OF THE INTERIOR
Defense Minerals Administration
RECEIVED
NOV 12 1954

BY

K. H. Teague and D. H. Amos, Geologists
U. S. Geological Survey

and

L. E. Shirley, Mining Engineer
U. S. Bureau of Mines

November 8, 1954

Reviewed by
DMEA OPERATING COMMITTEE

11-17-54
(date)

FIELD EXAMINATION REPORT
ON
DMEA-3529, SUSIE PHILLIPS PROSPECT (mica)
(Robert Phillips Mine)

GCJ
11/30/54

Applicant: John Phillips, Spruce Pine, North Carolina

Considerable mining has been done at this mine, chiefly for feldspar. Most of the mica observed is badly mineral-stained and not of strategic grade; thus, it is recommended that exploratory assistance be denied.

The Susie Phillips Prospect (Robt. Phillips Mine) is 3.1 airline miles N. 22° E. of Booneford, Mitchell County, N. C., on the west side of Snow Creek.

The property was examined on November 3, 1954. Messrs. Sam L. Phillips and Robert Phillips, Sr. accompanied the examiners on the inspection which required one and one-half hours.

An unpublished report of the U. S. G. S., author unknown, gives the following information on the mine:

" It is said to have been opened about 1860, and has been worked for short periods by many prople. According to Robert Phillips, Sr., the first large-scale stoping was done from a 25-foot shaft along a quartz core 8 feet thick. Core margin "A" mica was obtained from the northwest side and flat books from the southeast side. Several tons of beryl also was recovered. Extensive robbing of the old workings at a later date resulted in their collapse to form two elongate surface depressions about 60 feet long and 15 feet deep. During recent years a Mr. English of Spruce Pine drove a 70-foot tunnel, but ceased operations when old workings were encountered.

The hanging-wall contact of the deposit cuts irregularly across the structure of the country rock, a hornblende gneiss with well defined layering that strikes N. 60° E. and dips 70° SSE. to vertical. The thickness of the pegmatite body is not known. In addition to the quartz core, the deposit consists of medium-to coarse-grained microcline, plagioclase, and muscovite, with accessory garnet, beryl, and columbite-tantalite. The mica is brown to greenish brown, and most is black specked and badly clay stained. Ruling and haircracks are other defects. Some of the books are said to have been very large."

All of the mica observed by the examiners is "A-type" and most is badly mineral-stained and mottled. Only a small percent would be ~~xxxxx~~ classified as strategic by present Government specifications. Beryl is also reported to have been recovered from past mining operations but none was observed.

L. E. Shirley, Mining Engineer
U. S. Bureau of Mines

K. H. Teague and D. H. Amos, Geologists
U. S. Geological Survey

NOV 8 1954

Docket Copy
Surname:
Anderson
Houk
Kiilsgaard
Hedges
Selfridge
Johnson

UNITED STATES
DEPARTMENT OF THE INTERIOR
DEFENSE MINERALS EXPLORATION ADMINISTRATION
WASHINGTON 25, D. C. 600

OCT 22 1954

Mr. John Phillips

Spruce Pine, North Carolina

Re: Docket No. DMEA-3529 - Mica
Susie Phillips Prospect
Mitchell County, North Carolina

Dear Mr. Phillips:

Your application for assistance in exploring the subject property has been reviewed by the Nonmetallic Minerals Division of the Defense Minerals Exploration Administration and has been referred to Mr. Robert A. Laurence, Executive Officer, DMEA Field Team, Region VII, Room 13, Post Office Building, Knoxville 2, Tennessee, for further consideration and possibly a field examination.

The Regional Office will contact you at an early date if an examination is to be made. Any assistance that you may give the members of the field team during the examination will be appreciated.

Sincerely yours,

C. O. Mittendorf

Administrator

WCAnderson:gad 10/21/54

Copy to: Admr. R. File
Docket
Operating Committee
Field Team, Region VII
Mr. Dietrich, 3061
Mr. Kiilsgaard, 5223
Mr. Houk

R.C.S.

Docket Copy
Surname:
Anderson
Houk
Selfridge
H. Johnson

UNITED STATES
DEPARTMENT OF THE INTERIOR
DEFENSE MINERALS EXPLORATION ADMINISTRATION
WASHINGTON 25, D. C. 600

OCT 22 1954

Mr. Robert A. Laurence
Executive Officer, DMEA
Field Team, Region VII
Room 13, Post Office Bldg.
Knoxville 2, Tennessee

Subject: Docket No. DMEA-3529 - Mica
John Phillips
Susie Phillips Prospect
Mitchell County, North Carolina

Dear Mr. Laurence:

Please review the subject application and arrange for a field examination if you deem it necessary.

Copies of memoranda from the Geological Survey, dated October 19, 1954, and from the Bureau of Mines, dated October 15, 1954, are enclosed for your information.

Sincerely yours,

George C. Selfridge
Chairman, Operating Committee (2LB)

Approved:

J. H. Hedges
Member, Bureau of Mines (2LB)

Thor H. Kiilsgaard
Member, Geological Survey (2LB)

Enclosures 4

WCAnderson:gad 10/21/54
Copy to: Admr. R. File
Docket
Operating Committee
Mr. Dietrich, 3061
Mr. Kiilsgaard, 5223
Mr. Houk

R.C.G.

IN REPLY REFER TO:

UNITED STATES
DEPARTMENT OF THE INTERIOR
GEOLOGICAL SURVEY
WASHINGTON 25, D. C.

Defense Minerals Administration
RECEIVED
OCT 20 1954

October 19, 1954

Re: DMEA-3529
John Phillips
(Susie Phillips
Prospect)
Mitchell Co., N.C.
$8,200 - Mica

Memorandum

To: L. G. Houk, Defense Minerals Exploration Administration

From: E. L. Newcomb, U. S. Geological Survey

Subject: Review of application

The applicant proposes a project involving 100 feet of trenching, sinking a 90 foot shaft and 100 feet of drifting.

We have no available information in our files on this prospect.

It is reported that mica and beryl were produced some years ago from old workings which reached a depth of 50 feet.

I recommend this application be referred to the Field Team for their recommendation and a possible examination if they consider it is necessary.

E. L. Newcomb

E. L. Newcomb

UNITED STATES
DEPARTMENT OF THE INTERIOR
BUREAU OF MINES
WASHINGTON 25, D. C.

DEPARTMENT OF THE INTERIOR
Defense Minerals Administration
RECEIVED
OCT 18 1954

October 15, 1954

Memorandum

To: Nonmetallic Minerals Division
Defense Minerals Exploration Administration

From: Chief, Ceramic and Fertilizer Materials Branch

Subject: DMEA-3529 (mica)

Applicant: John Phillips

Name and Location of Property: Susie Phillips Prospect
Mitchell County, North Carolina

Date Application Rec'd. by Ceramic & Fertilizer Mtls. Br.: 10/13/54

Comments:

1. No data available in this office on subject mine.

2. Proposed exploration is consistent with good engineering practice and estimated expenditures are in line with other DMEA projects in the area.

Recommendation:

It is recommended that the field team visit this mine when in that vicinity to ascertain if an exploration project is justified. If so, the field team and applicant should agree on a definite plan of exploration on a unit-cost basis.

W. F. Dietrich

W. F. Dietrich

October 13, 1954

Mr. John Phillips
Spruce Pine
North Carolina

Subject: DMEA-3529
Re: Exploration Assistance
Susie Phillips Prospect

Dear Sir:

The receipt of your application dated October 11, 1954 for exploration assistance under the Defense Production Act of 1950, as amended, is hereby acknowledged.

Your application has been assigned Docket Number DMEA-3529 and referred to the Non-Metallic Minerals Division.

Kindly refer to in any future correspondence relating to your application.

Sincerely yours,

MF-103
(Revised April 1952)

UNITED STATES DEPARTMENT OF THE INTERIOR
DEFENSE MINERALS EXPLORATION ADMINISTRATION

Form Approved.
Budget Bureau No. 42-R1035.2.

OCT 13 1954

APPLICATION FOR AID IN AN EXPLORATION PROJECT, PURSUANT TO DMEA ORDER 1, UNDER THE DEFENSE PRODUCTION ACT OF 1950, AS AMENDED

Not to be filled in by applicant

Docket No. 3529
Metal or Mineral MICA
Date Received
Estimated Cost $8,200
Participation (Government %)

INSTRUCTIONS

1. *Name of applicant.*—(*a*) State here your full legal name, in the form in which you will wish to contract, and your mailing address: John Phillips
Spruce Pine, N. C.

(*b*) If other than an individual, add to your name above whether a corporation, partnership, etc., and the name of the State in which incorporated or otherwise organized.

(*c*) If a corporation, add to above statement, titles, names and addresses of officers.

(*d*) If a partnership, add to the above statement the names and addresses of all partners.

2. *General.*—Read DMEA Order 1, "Government Aid in Defense Exploration Projects," before completing this application. Submit this application and all accompanying papers in quadruplicate (four copies), with your name and address on each sheet of the application and on all accompanying papers. Where sufficient space is not provided on the form for all required information, state it on an accompanying paper, with a reference in each case to the instruction to which it refers by number. Comply with all applicable instructions; or, if not applicable, so state. File the application with Defense Minerals Exploration Administration, Department of the Interior, Washington 25, D. C., or with the nearest field executive officer thereof.

3. *Applicant's property rights.*—(*a*) State the legal description of the land upon which you wish to explore, including all land which you possess or control that may be benefited by the exploration, and excluding any land or interest in land which is not to be included in the exploration project contract Legal description given on attached lease.

(*b*) State any mine name by which the property is known. Susie Phillips Prospect

(*c*) State your interest in the land, whether owner, lessee, purchaser under contract, or otherwise Lessee

(*d*) If you are not the owner, submit with this application a copy of the lease, contract, or other document under which you control the property. Lease attached.

(*e*) If you own the land, describe any liens or encumbrances on it Not owner

(*f*) If the land consists of unpatented claims, add to the description above, the book and page numbers for each recorded location notice. None

4. *Physical description.*—(*a*) Describe in detail any mining or exploration operations which have been or now are being conducted upon the land, including existing mine workings and production facilities. State your interest, if any, in such operations. Also describe accessibility of mine workings for examination purposes. See attached sheet.

(*b*) State past and current production, and ore reserves, if any, giving quantities and grades.

(*c*) Describe the geologic features of the property, including mineralization, type of deposit (vein, bedded, etc.), and your reasons for wishing to explore. Illustrate with maps or sketches. Send with your application (but not necessarily as a part of it) any geologic or engineering report, assay maps, or other technologic information you may have, indicating on each whether you require its return to you.

(*d*) State the facts with respect to the accessibility of the project: Access roads, distances to shipping, supply and residence points.

(*e*) State the availability of manpower, materials, supplies, equipment, water, and power.

5. *The exploration project.*—(*a*) State the mineral or minerals for which you wish to explore Mica

(*b*) Describe fully the proposed work, including a map or sketch of the property showing a plan (and cross sections if needed) of any present mine workings, and the location of the proposed exploration work as related to such features as contacts, veins, ore-bearing beds, etc. Sheet attached showing proposal.

(*c*) The work will start within 30 days and be completed within ..... months from the date of an exploration project contract.

(*d*) State the operating experience and background of the applicant with relation to the ability to carry out such exploration project, and also that of the person or persons who will supervise the operations. Now on file with DMEA.

6. *Estimate of costs.*—Furnish a detailed estimate of the costs of the proposed work (you will have to use a separate sheet), under the following headings. Add the totals under all headings to give the estimated total cost of the project: See sheet

(*a*) *Independent contracts.*—(Note.—If the applicant does not intend to let any of the work to contractors, write "none" after this item. To the extent that the work is to be contracted, do not repeat the cost of the contract-work in subsequent items.) State the cost of any proposed independent contracts for the performance of all or any part of the work, expressed in terms of units of work (such as per foot of drilling, per foot of drifting, per hour of bulldozer operations, per cubic yard of material moved, etc.).

(*b*) *Labor, supervision, consultants.*—Include an itemized schedule of numbers, classes and rates of wages, salaries or fees for necessary labor, supervision and engineering and geological consultants.

(*c*) *Operating materials and supplies.*—Furnish an itemized list, including items of equipment costing less than $50 each, and power, water and fuel.

(*d*) *Operating equipment.*—Furnish an itemized list of any operating equipment to be rented, purchased, or which is owned and will be furnished by the Operator, with the estimated rental, purchase price, or suggested use-allowance based on present value, as the case may be.

(*e*) *Rehabilitation and repairs.*—Furnish a detailed list showing the cost of any necessary initial rehabilitation or repairs of existing buildings, installations, fixtures, and movable operating equipment, now owned by the Operator and which will be devoted to the exploration project.

(*f*) *New buildings, improvements, installations.*—Furnish a detailed list showing the cost of any necessary buildings, fixed improvements, or installations to be purchased, installed or constructed for the benefit of the exploration project.

(*g*) *Miscellaneous.*—Furnish a detailed list showing the cost of repairs to and maintenance of operating equipment (not including initial rehabilitation or repairs of the Operator's equipment), analytical work, accounting, workmen's compensation and employers' liability insurance, and payroll taxes.

(*h*) *Contingencies.*—Give an estimate of any necessary allowances for contingencies not included in the costs stated above.

NOTE.—No items of general overhead, corporate management, interest, taxes (other than payroll and sales taxes), or any other indirect costs, or work performed or costs incurred before the date of the contract, should be included in the estimate of costs.

7. (*a*) Are you prepared to furnish your share of the cost of the proposed project in accordance with the regulations on Government participation (Sec. 7, DMEA No. 1)? Yes. Required 25% will be furnished.

(*b*) How do you propose to furnish your share of the costs?

[x] Money [ ] Use of equipment owned by you [ ] Other

Explain in detail on acompanying paper.

CERTIFICATION

The undersigned, whether as an individual, corporate officer, partner, or otherwise, both in his own behalf and acting for the applicant, certifies that the information set forth in this form and accompanying papers is correct and complete, to the best of his knowledge and belief.

Dated October 11, 1954.

John Phillips
(Applicant)

By John Phillips

Title 18, U. S. Code (Crimes), Section 1001, makes it a criminal offense to make a willfully false statement or representation to any department or agency of the United States as to any matter within its jurisdiction.

U. S. GOVERNMENT PRINTING OFFICE 16—66551-1

MF-103 (continuation sheet)

4. (a) Approximately 85 or 90 years ago a vein of mica was found here and worked to a depth of about 50'. No other workings.

   (b) No actual records were kept of the products and amounts but the mica is represented as being extremely high quality ruby mica. It is reported that some mica was sold to the Asheville Mica Co., but no records have been kept as to how much. Also it is reported that 10 to 20 Tons of Beryl was mined near this prospect at one time.

   (c) Reports are that when the mica was recovered before, that water ran the operators out at a 50' depth and the vein was lost in the water. We believe that with some assistance the vein could be found and some high quality ruby mica recovered.

   (d) Mine prospect is accessible to roads, shipping, etc.

   (e) Power is within 1500 feet of prospect, water is near, and manpower, equipment and supplies available.

5. (b) We propose to bulldoze a trench 100' long, 10' deep and 12' wide, then sink a shaft at best location to a depth of 90'; then drift 100' best direction with vein.

6. <u>Estimate of Costs</u>:

20 Hrs. Bulldozing Site @ 10.00 per hr.	$ 200.00
Sinking Shaft 90' @ $50.00 per ft.	4500.00
Drifting with vein 100' @ 35.00 per ft.	3500.00
Total Estimated Cost	$ 8200.00

MINING LEASE

State of North Carolina Mitchell County:

This indenture made this 11th day of October, 1954, ~~1953~~

between R. B. Phillips

of Mitchell County and State of North Carolina as party of the first part, and known as lessor, and John Phillips

of Mitchell County and State of North Carolina, party of the second part and known as lessee.

WITNESSETH, That the party of the first part in consideration of One Dollar in hand received and hereby acknowledged by the lessor, and in consideration of the agreements hereinafter contained, on the part of the party of the second part to be performed, hereby bargains, leases and grants to the party of the second part, and his heirs and assigns, for the period of five years from the date of this agreement, the following described real property, for mining purposes, in the County and State first above written to wit:

Beginning at the center of what is known as the Susie Phillips Prospect and running North 250'; thence West 250', thence South 500', thence East 500', thence North 500', thence West 250' to the beginning.

TO HAVE AND TO HOLD the said lands to him, for mining purposes, the said lessee and his heirs and assigns for the aforesaid period of five years in compliance with the condition of this instrument, for the purpose and with the right to dig, quarry, search, explore for, obtain, and remove any kind of minerals, metals or fossils, and particularly mica, and to conduct the same to any extent the said party of the second part, the lessee, may desire. And it is hereby agreed between the parties to this agreement that the party of the second part is to have the use of any unoccupied buildings on said lands for mining purposes, and that he shall have the right to erect such buildings as he needs to carry on such mining operatins during the period of this lease, and that the party of the second part shall keep the same in as good condition as when received, unavoidable accidents excepted. And it is also agreed by the party of the second part that no unnecessary damage is to be done to the lands herein leased during the period of this lease and the continuance of said lease, but the said party of the second part shall have the right to take from said lands leased to the party of the second part any wood or timber the party of the second part may need to carry on said mining operations or which may be needed to carry on the addition to existing buildings or to erect new buildings or sheds on said lands. (Timber of high or special market value is excepted and shall not be used by the lessee.) And it is hereby agreed that the party of the second part, the lessee, is to have right-of-way of ingress and egress to said mines or land upon which exploration is being conducted.

AND IT IS FURTHER AGREED That the party of the second part, the lessee hereby agrees to pay to the said part of the first part, or his or their heirs or assigns, a rental royalty of 1/8

on the minerals taken and sold from said mines which shall be for the use of the said lands for the aforesaid period of five years. The said amounts shall be payable on the computation of selling bills on the tenth day of each month covering sales made during the previous month. Any minerals other than those set forth above which may be taken and sold shall be paid for and at the usual royalty rate of the minerals taken.

AND IT IS FURTHER AGREED That the lessee, the party of the second part, his heirs or assigns, shall have the option to renew this lease and to extend the period of its running for an additional five years from the date of its present termination. The option shall be exercised by giving formal written notice to the party of the first part or by the continuation of any mining operations then being conducted. The lessor reserve the right to use the land, or convey the same not conflicting with this lease, but under any conveyance the terms of this lease must be recognized by the grantee, purchaser, or assigns thereof. And it is agreed that the lessee may assign this mining lease or any part thereof and that he may sublease.

AND IT IS FURTHER AGREED That the lessee, the party of the second part, his heirs or assigns, is hereby given an option to purchase all the right, title and interest, legal and equitable to and in the real estate described and set forth in this lease for a total purchase price of _____, said purchase price to be paid in full within three years from the date of this instrument and it is agreed that all rental royalties paid to the party of the first part shall apply toward and be a part of the total purchase price above set forth, and that at such time that the total purchase price is paid in the form of royalties or a lump sum payment or a combination of both, the party of the first part will execute a special warranty deed to the party of the second part and that a tender of the remaining purchase price at any time within the next three years shall entitle the party of the second part to specific performance of this option contract.

BUT IT IS EXPRESSLY AGREED That unless mineral or fossil material of practical value for mining purposes shall be found within a period of two years from the date of this instrument, the lease may be terminated by the lessee at any time thereafter on thirty days notice to the lessor. The lessee agrees that during the period of this lease or the continuance of this lease work in said mines or exploration for new mines within the area leased shall not cease longer than ninety days at any one time, unavoidable accidents excepted.

WITNESS our hands and seals the day and year first above written.

Witness: R B Phillips (Seal)

_____ _____ (Seal)

_____ (Seal)

SUSIE PHILLIPS PROSPECT

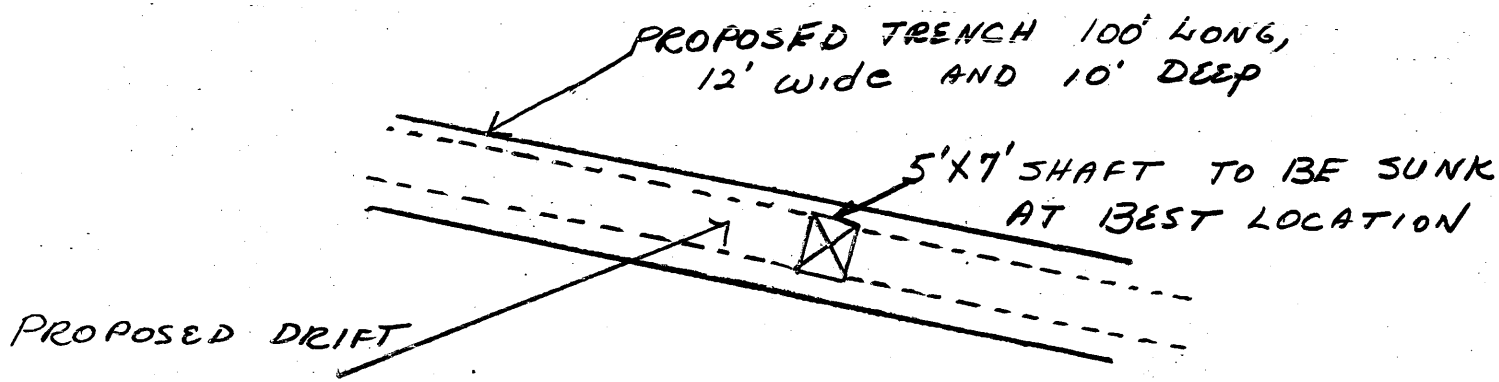

DEPARTMENT OF THE INTERIOR
DEFENSE MINERALS
EXPLORATION ADMINISTRATION
~~WASHINGTON 25, D.~~ C.

OFFICIAL BUSINESS

Mr. George C. Selfridge, Chairman
Operating Committee, DMEA -
Dept. of the Interior
Washington 25, D. C.