DOCKET

DEPARTMENT OF THE INTERIOR
Defense Minerals Administration
RECEIVED
NOV 1 - 1954

12/17/4

EXPLORATION PROJECT CONTRACT

DUVALL, MYERS, MYERS & MEEKER, Partners

Docket No. DMEA-3285

AMENDMENT NO. 1

Contract Idm-E 682, Docket No. DMEA-3285 dated July 8, 1954, between the United States of America, acting through the Department of the Interior, Defense Minerals Exploration Administration, hereinafter called the "Government," and E.B. Duvall, F. S. Myers, W. A. Myers and Paul S. Meeker, a partnership, hereinafter called "Operator" is hereby amended as follows:

In Exhibit "A", Description of the Work, under item 2, delete the words "the bottom of" from the first line. This item now reads, "From the shaft, drive 80 feet of drift and/or crosscut on the pegmatite."

"This amendment shall not be construed to increase the estimated total cost of the project, the aggregate total amount which the Government may be required to pay, nor the amount of any item designated as 'Allowable maximum'.

Dated: September 27, 1954.

By: Paul S. Meeker
PAUL S. MEEKER, PARTNER

By: E B Duvall
E. B. Duvall, Partner

BY: F S Myers
F. S. Myers, Partner

BY: W. A. Myers
W. A. Myers, Partner

THE UNITED STATES OF AMERICA

By: Robert A Lamen
Executive Officer, DMEA
Field Team, Region VII

MF-200 (A)
(February 1952)

DOCKET NO. DMEA 3285

COMMODITY Mica

Docket copy
IDM - E 682

UNITED STATES OF AMERICA
DEPARTMENT OF THE INTERIOR
DEFENSE MINERALS EXPLORATION ADMINISTRATION

EXPLORATION PROJECT CONTRACT[1]

(Short Form)

IT IS AGREED this 8th day of July, 1954 between the United States of America, acting through the Department of the Interior, Defense Minerals Exploration Administration, hereinafter called the "Government," and[2] E.B. Duvall, F.S. Myers, W.A. Myers and Paul S. Meeker, a partnership, c/o Paul S. Meeker, Route 3, Deaverview Road, Asheville, North Carolina

hereinafter called the "Operator," as follows: and as set forth in Annexes I and II attached hereto and made a part hereof

ARTICLE 1. *Authority for contract.*—This agreement is entered into under the authority of the Defense Production Act of 1950, as amended, pursuant to DMEA Order 1 entitled "Government Aid in Defense Exploration Projects."

ARTICLE 2. *Operator's property rights.*—With respect to that certain land situated in the State of North Carolina, County of Macon, described as follows: xxxx set forth in Annex I

the Operator represents and undertakes:[4]

[redacted]

(*b*) That the Operator is a lessee, in possession and entitled to possession, and the Owner's Consent to Lien is attached.

The Operator shall devote the land and all existing improvements, facilities, buildings, installations, and appurtenances to the purposes of the exploration project without any allowance for the use, rental value, depreciation, depletion, or other cost of acquiring, owning, or holding possession thereof.

ARTICLE 3. *Exploration project.*—The Operator, within 60 days from the date of this contract shall commence work on a project of exploration for[5] Mica

in or upon the described land; and shall bring the project to completion within a period of Five(5) Months from the date of this contract. The work to be performed is more fully described in Exhibit "A" attached hereto, which, with any maps or drawings thereto attached, are made a part of this contract. The Government will contribute to the cost of this work as hereafter provided. The work shall be performed by the Operator or by independent contractor or contractors efficiently, expertly, in a workmanlike manner, in accordance with good mining standards and State regulations for health and safety and for workmen's compensation and employers' liability insurance, with suitable and adequate equipment, materials, and labor, to bring the project to completion within the time fixed. The Government shall have the right to enter and observe and inspect the work at all reasonable times, and the Operator shall provide the Government with all available means for doing so. The Government may consult with and advise the Operator on all phases of the work.

ARTICLE 4. *Costs of the project.*—The agreed, estimated costs of performing the work, expressed in terms of units of work to be performed (per foot of drifting, per foot of drilling, per cubic yard of material to be moved, etc.) are set forth in Exhibit "A," attached hereto. The Government will pay 75 percent of these agreed, estimated costs, as they accrue, for units of work actually performed that conform with the description or specifications for the work set forth in this contract, in an aggregate total amount not in excess of $3,525.00, which is 75 percent of $4,700.00 the agreed, estimated total cost of the project in which the Government will participate: *Provided,* That until the Operator's final report and final accounting have been rendered to the Government and any final check or auditing required by the Government has been made, and a final settlement of the contract has been made, the Government may withhold from the last voucher or vouchers such sums as it sees fit not in excess of ten (10) percent of the maximum total which the Government might have been called upon to pay under the terms of the contract. The Government may, as it sees fit, make payments direct to the Operator's independent contractors, if any, for the account of the Operator, rather than to the Operator.

ARTICLE 5. *Reports, accounts, audits.*—(*a*) *Progress reports.* The Operator shall provide the Government with monthly reports of units of work performed under the contract, in quintuplicate (five copies), upon forms provided by the Government. These progress reports shall be certified by the Operator, and shall constitute both the Operator's invoice of units of work performed on the project during the period covered by the report and his voucher for repayment by the Government, unless the Government requires the use of a standard voucher form with invoice attached. Progress reports shall include surface and/or underground engineering-geological maps or sketches showing the progress of the exploration, with assay-reports on samples taken concurrently with the advance in mineralized ground.

[1] Sufficient space is not provided in any blank, use an extra sheet of paper and refer to it in the blank.
[2] Name, address, and nature of organization if any.
[3] Legal description or enough to identify the property, particularly excluding any land or interest therein to which the Government's lien is not to [illegible] production from which is not to be subject to the Government's percentage royalty.
[4] Strike the provision not applicable.
[5] Mineral or minerals.

16—66329-1

(*b*) *Final report.*—Upon completion of the exploration work or termination of the contract the Operator shall provide the Government with an adequate geological and engineering report, in quintuplicate (five copies), including an estimate of ore reserves resulting from the exploration work.

(*c*) *Compliance with requirements.*—If, in the opinion of the Government, any of the Operator's reports are insufficient or incomplete, the Government may procure the making or completion of such reports and attachments as an expense of the exploration work; and the Government may withhold approval and payment of any vouchers depending upon insufficient or incomplete reports.

(*d*) *Accounts and audits.*—The Operator shall keep suitable records and accounts of the units of work performed, which the Government may inspect and audit at any time. The Government may at any time require a check of the work performed and an audit of the Operator's records and accounts, by a certified public accountant or otherwise, the cost thereof to be treated as a cost of the project. The Operator shall keep and preserve said records and accounts for at least 3 years after the completion of the project or the termination of this contract. Upon the completion of the project or termination of the contract the Operator shall render a final account and statement of work performed to accompany his final report.

ARTICLE 6. *Repayment by Operator.*—(*a*) If, at any time, the Government considers that a discovery or a development from which production may be made has resulted from the exploration work, the Government, at any time not later than 6 months after the Operator has rendered the required final report and final account, may so certify in writing to the Operator. The certification shall describe broadly or indicate the nature of the discovery or development. In the event of such certification, any minerals mined or produced from the land described in Article 2 within 10 years from the date of this contract, including any mined or produced before the certification, shall be subject to a percentage royalty which the Operator or his successor in interest shall pay to the Government, upon the net smelter returns, the net concentrator returns, or other net amounts realized from the sale or other disposition of any such production, in whatever form disposed of, including ore, concentrates, or metal, until the total amount contributed by the Government, without interest, is fully repaid, or said 10 years have elapsed, whichever occurs first, as follows:

(1) One and one-half (1½) percent of any such net amounts not in excess of eight dollars ($8.00) per ton.

(2) One and one-half (1½) percent of any such net amounts, plus one-half (½) percent of such net amounts for each additional full fifty cents ($0.50) by which such net amounts exceed eight dollars ($8.00) per ton, but not in excess of five (5) percent of such net amounts.

(For instance: The percentage royalty on a net amount of five dollars ($5.00) per ton, would be one and one-half (1½) percent; on a net amount of ten dollars ($10.00) per ton, three and one-half (3½) percent.)

(*b*) As here used, "net smelter returns," "net concentrator returns," and "other net amounts realized from the sale or other disposition," mean gross revenue from sales, or if not sold, the market value of the material after it is mined in the form in which and the place where it is held. In the case of integrated operations in which the material is not disposed of as such, these terms mean what is or would be the gross income from mining operations for percentage depletion purposes in income-tax determination.

(*c*) To secure the payment of its percentage royalty, the Government shall have and is hereby granted a lien upon the land described in Article 2 and upon any production of minerals therefrom, until the royalty claim is extinguished by lapse of time or is fully paid.

(*d*) This article is not to be construed as imposing any obligation on the Operator or the Operator's successor in interest to engage in any mining or production operations. **See Annex II, substituted for Article 6**

ARTICLE 7. *Assignment, transfer, or loss of Operator's interest.*—Without the written consent of the Government, the Operator shall not assign or otherwise transfer or hypothecate this contract or any rights thereunder. The Operator shall not make any voluntary nor permit any involuntary transfer or conveyance of the Operator's rights in the land described in Article 2, without making suitable provision for the preservation of the Government's right to a percentage royalty on production and lien for the payment thereof; *Provided,* that mere failure by the Operator to maintain the Operator's rights in the land, without any consideration running to the Operator other than relief from the cost of maintaining such rights (as by surrender of a leasehold, failure to perform assessment work, or failure to exercise an option), coupled with complete abandonment by the Operator of all interest in or operations on the land for a period of 10 years from the date of this contract, shall not constitute such a transfer or conveyance. Should the Operator make or permit any transfer or conveyance in violation of this provision, the Operator shall be and remain liable for payment to the Government of the same amounts, at the same times, as would have been paid under the terms of the percentage royalty on production. If for any reason the net smelter returns, net concentrator returns, or other net amounts realized from the sale or other disposition of such production are not available as a means of measuring the amount of the Operator's liability, the amount thereof shall be estimated as well as may be, and in the event of dispute as to such estimates, the determination thereof by the Administrator of Defense Minerals Exploration Administration or by his successor shall be final and binding upon the Operator.

ARTICLE 8. *Termination and completion.*—The Government may, at any time, by written notice to the Operator, terminate this contract: (*a*) If the Operator fails to provide his share of the money necessary to prosecute operations pursuant to the terms of the contract; (*b*) if the Operator, in the opinion of the Government, fails to prosecute operations pursuant to the terms of the contract; or (*c*) if, in the opinion of the Government, operations up to the time of the notice have not indicated the probability of making any worth while discovery and in the opinion of the Government further operations are not justified.

ARTICLE 9. *Changes and added provisions* .....

Executed in sextuplicate the day and year first above written.

THE UNITED STATES OF AMERICA

E. B. Duvall — Partner

F. Symmes — Partner

By W. H. Myers — Partner

Paul S. Meeker — Partner

Partner Hoffland Hook Talbot

By O. M. Meadors
Administrator, Defense Minerals Exploration Administration

I, , certify that I am the secretary of the corporation named as Operator herein; that , who signed this contract on behalf of the Operator, was then of said corporation; that said contract was duly signed for and in behalf of said corporation by authority of its governing body, and is within the scope of its corporate powers.

[CORPORATE SEAL]

U. S. GOVERNMENT PRINTING OFFICE 16—66329-1

EXPLORATION PROJECT CONTRACT
E. B. DEVALL, F. S. MYERS, W. A. MYERS
AND
PAUL S. MEHNER, A PARTNERSHIP
DOCKET NO. DMRA-3685

ANNEX I

The land referred to in Article 2 of the contract form and in Annex II is known as the Bryson No. 2 Mine and was leased for mining purposes to E. B. Devall, F. S. Myers, W. A. Myers and Paul S. Mehner, a partnership by Carr Bryson and wife Frances Bryson, by an instrument dated April 30, 1954. The land is located on the south side of the Cowee Creek Road about one-half mile east of West Hill Post Office, 5.6 air-line miles S. 14° W. of Franklin, Macon County, North Carolina, and is described as follows:

"Beginning at an iron stake located at the junction of a branch (small, un-named) with the Cowee Road, said junction being located approximately 150 feet Northwest from Carr Bryson's Homeplace; runs in a Southwesterly direction along the South margin of said road 45 poles to a stake located at said edge of road; thence South 0 degrees W 36 poles up a slope to a stake; thence Due East 40 poles to a stake; thence North 0 degrees East 55 poles to the BEGINNING Corner; containing 6 acres, be the same more or less."

EXPLORATION PROJECT CONTRACT
E. B. DUVALL, F. S. MYERS, W. A. MYERS
AND
PAUL S. MEEKER, A PARTNERSHIP
DOCKET NO. DMEA-3285

ANNEX II

The following provisions are in lieu of Article 6:

Repayment by Operator.--a. Certification.--If the Government considers that a discovery or development from which production may be made has resulted from the work, the Government, at any time not later than six months after the Operator has rendered the final report and final account, may so certify in writing to the Operator. Such certification shall describe broadly or indicate the nature of the discovery or development.

b. Royalty on production.--The Operator, as principal, if the Operator is the producer, or as surety, if the Operator is not the producer, shall pay to the Government a royalty on all minerals mined or produced from the land, as follows: (1) regardless of any certification of discovery or development, from the date of the contract until the lapse of the time within which the Government may make such certification, or until the total net amount contributed by the Government without interest is fully repaid, whichever occurs first; or (2) if the Government makes a certification of discovery or development, for a period of ten years from the date of the contract, or until the total net amount contributed by the Government without interest is fully repaid, whichever occurs first.

c. Basis for computation.--The Government's royalty shall be a percentage of the gross proceeds (including any bonuses, premiums, allowances, or other benefits) from the production sold, in the form sold (ore, concentrates, metal, or equivalent), at the point of delivery (the f.o.b. point); except, that charges of the buyer arising in the regular course of business, and shown as deductions on the buyer's settlement sheets, on account of the cost of treatment processes performed by the buyer, sampling and assaying to determine the value of the production sold, and freight paid by the buyer to a carrier (not the Operator), shall be allowed as deductions in arriving at the "gross proceeds" as that term is used herein. Any costs of treatment processes, sampling or assaying, or transportation, performed or paid by the

Operator or by anyone other than the buyer, are not deductible in arriving at the "gross proceeds" as that term is here used. The term "treatment processes," as here used, means those processes (such as milling, concentrating, smelting, refining, or equivalent) applied to the raw ore or other production after it is extracted from the ground, to put it into a commercially marketable form; excluding fabricating or manufacturing.

d. Unsold production.--If any production (ore, concentrates, metal, or equivalent), after the lapse of six months from the date the ore was extracted from the ground, remains neither sold nor used by the Operator in integrated manufacturing or fabricating operations (for instance, if it is stockpiled), the Government, at its option, as long as it so remains, may require the computation and payment of its royalty on the value of such production in the form (ore, concentrates, metal, or equivalent) it is in when the Government elects to require computation and payment. If any production is used by the Operator in integrated manufacturing or fabricating operations before the Government makes its election, the Government's royalty on such production shall be computed on the value thereof in the form in which and at the time when it is so used. "Value" as here used means what is or would be gross income from mining operations for percentage depletion purposes in Federal income tax determination, or the market value, whichever is greater.

e. Percentages of royalty.--The percentages of the Government's royalty shall be as follows:

> One and one-half ($1\frac{1}{2}$) percent of amounts ("gross proceeds" or "value") not in excess of eight dollars ($8.00) per ton of production in the form in which sold, held, or used, plus one-half ($\frac{1}{2}$) percent for each additional full fifty cents ($0.50) by which such amounts exceed eight dollars ($8.00) per ton, but not in excess of five (5) percent of such amounts.
>
> (For instance: the royalty on an amount of five dollars ($5.00) per ton, would be one and one-half ($1\frac{1}{2}$) percent; on an amount of ten dollars ($10.00) per ton, three and one-half ($3\frac{1}{2}$) percent.)

f. Lien for payment.--To secure the payment of its percentage royalty, there is hereby granted to the Government a lien upon the land or the Operator's interest in the land and upon any production of minerals therefrom, until the royalty claim is extinguished by lapse of time or is fully paid.

g. Notice to purchasers.--The Operator shall give notice of the Government's claim for royalty to any purchaser of the production, and shall authorize and direct such purchaser to pay the royalty directly to the Government and to furnish the Government with copies of the settlement sheets. If the records of any production and sales or other disposition of production, whether the production is by the Operator or by others, are not made available to the Government, the amount of the royalty may be estimated by the Administrator, Defense Minerals Exploration Administration, or his successor, and his estimate thereof shall be final and binding upon the Operator.

h. No obligation to produce.--Nothing in this contract is to be construed as imposing any obligation on the Operator or the Operator's successor in interest to engage in any mining or production operations.

i. Government not obligated to buy.--Nothing in this contract shall be construed as imposing any obligation on the Government to purchase any minerals mined or produced from the land.

EXPLORATION PROJECT CONTRACT
E. B. DUVALL, F. S. MEEKS, V. A. MEEKS
AND
PAUL S. MEEKS, A PARTNERSHIP
DOCKET NO. NMMA-5885

EXHIBIT "A"

Description of the Work

Exploration for constituents of strategic mica shall be accomplished in the mine indicated on the attached map entitled "Sketch of Bryson No. 2 Mine, Mason Co., N.C. NMMA-5885(mica)," as follows:

1. Deepen existing 12-foot shaft an additional 38 feet to the 50-foot level.

2. From the bottom of the shaft drive 80 feet of drift and/or crosscut on the pegmatite.

   The shaft and the drift and/or crosscut shall have cross-sectional dimensions of 5 feet by 7 feet in the clear of timber, and shall be timbered where necessary.

   The location, inclination, direction and extent of all work are subject to the approval of the Government.

Agreed Unit Costs

Sinking 38 feet of shaft @ $50.00/ft.	$1,900.00	
Driving 80 feet of drift and/or crosscut @ $35.00/ft.	2,800.00	
AGREED ESTIMATED TOTAL COST OF PROJECT		$4,700.00
GOVERNMENT PARTICIPATION AT 75%		$3,525.00

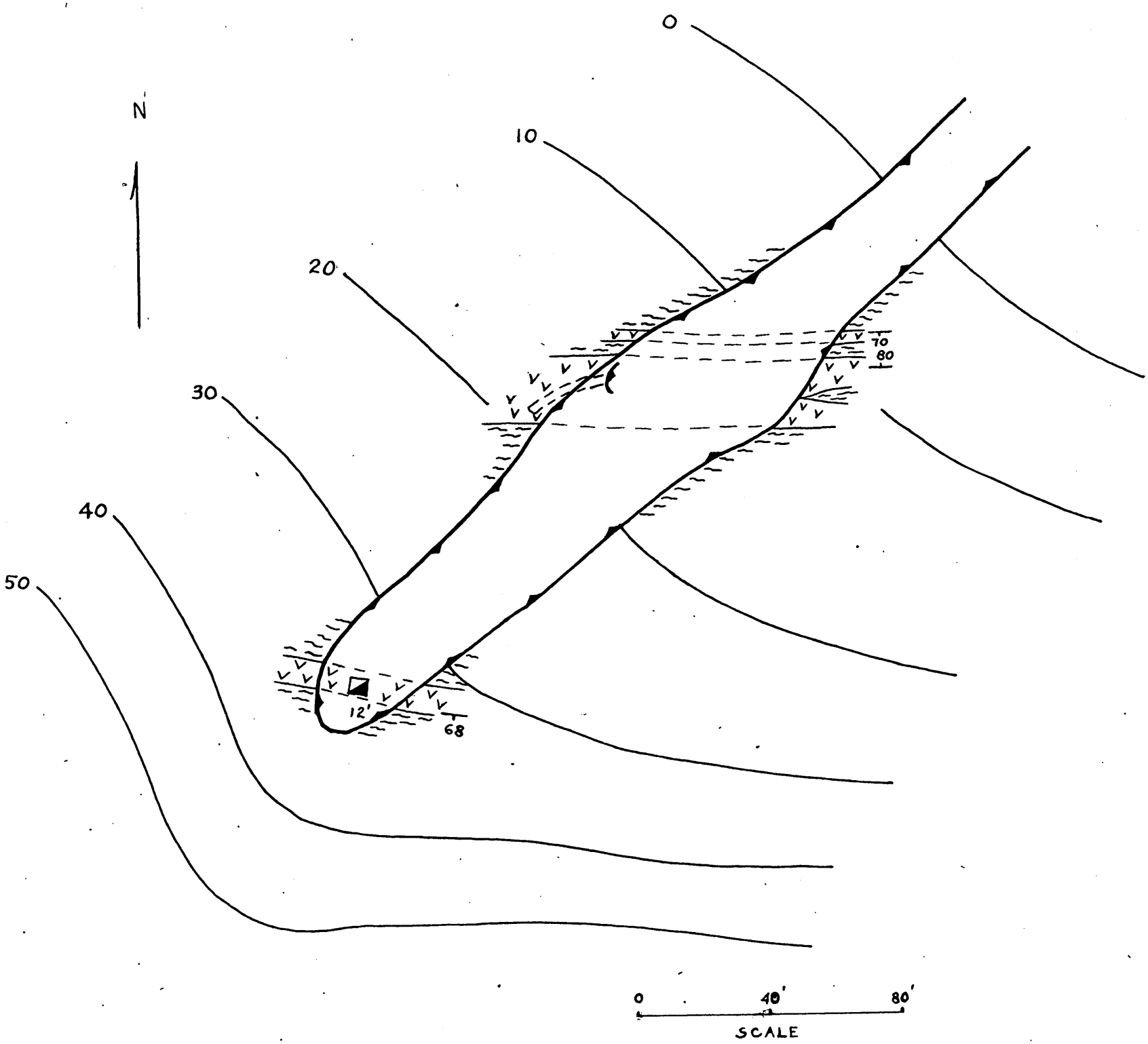

SKETCH OF
BRYSON #2 MINE
MACON CO., N.C.

DMEA-3285 (mi

MF-203
(Revised July 1, 1953)

OWNER'S CONSENT TO LIEN

WHEREAS, the undersigned, as owner, co-owner, lessor, or seller has an interest in certain property in the State of North Carolina, County of Macon, described as follows:1/ "Beginning at an iron stake located at the junction of a branch (small, un-named) with the Cowee Road, said junction being located approximately 150 feet Northwest from Carr Bryson's Home-place; runs in a Southwesterly direction along the South margin of said road 45 poles to a stake located at said edge of road; thence South 0 degrees W 36 poles up a slope to a stake; thence Due East 40 poles to a stake; thence North 0 degrees East 55 poles to the BEGINNING Corner; containing 6 acres, be the same more or less."

which is the subject of a proposed exploration project contract, hereinafter called the "contract", between the United States of America, hereinafter called the "Government", and

2/ E. B. Duvall, F.S. Myers, W.A. Myers and Paul S. Meeker, a partnership, c/o Paul S. Meeker, Route 3, Deaverview Road, Asheville, North Carolina

hereinafter called the "Operator"; and

WHEREAS, under the provisions of said contract the Government is entitled to a percentage royalty on production (as set forth on the reverse side hereof) and to other rights and equities which do or may conflict with or be adverse to the rights of the undersigned:

NOW THEREFORE, the undersigned, in consideration of said contract and as an inducement to the Government to enter into same, undertakes and agrees as follows:

1. The Government's equity in and right to dismantle, sever, take possession of, and remove and dispose of facilities, buildings, fixtures, equipment, or other items as provided in the contract, or any amendment thereof, shall prevail over and be prior and superior to any conflicting or adverse rights of the undersigned, and the Government is authorized to enter upon the land for such purposes.

2. To secure the payment to the Government of the percentage royalty on production3/ provided for under the terms of said exploration project contract, or any amendment thereof, there is hereby granted to the Government a lien upon the land above referred to and upon any production of minerals therefrom, until said royalty is fully paid or ten years have elapsed from the date of the contract, whichever occurs first.

3. The undersigned shall commit no act nor assert any claim that may contravene or conflict with the lien, claim, or rights of the Government under the provisions of said contract. This agreement shall be binding upon the heirs, executors, administrators, successors, and assigns of the undersigned.

4. Changes and added provisions _____

Dated this 15 day of July, 1954.

Carr Bryson [Seal]

Frances Bryson [Seal]

_____ [Seal]

1/ Either (a) insert the legal description of the land, or (b) strike out the words "as follows" and insert "in a lease [or contract, deed, or other document] dated _____, and recorded in book _____ page _____ official records of said county." If (b) is used, the book and page of recordation cannot be dispensed with. If the space provided is insufficient, use an Annex, and refer to the Annex in the space.

2/ Insert the name of the Operator as it will appear in the exploration project contract.

3/ Mining or production from the land is not required, and in the absence of production there is no obligation to repay the Government.

~~RELEVANT CONTRACT PROVISIONS~~

~~Repayment by Operator.--a. Certification.--If at any time the Government considers that~~ a discovery or development from which production may be made has resulted from the exploration work, the Government, at any time not later than six months after the Operator has rendered the final report and final account, may so certify in writing to the Operator. Such certification shall describe broadly or indicate the nature of the discovery or development.

b. Percentage royalty.--The Operator, or his successor in interest, shall pay to the Government a royalty on all minerals mined or produced from the land described in Article 2,--(1) regardless of any certification of discovery or development, from the date of the contract until the lapse of the time within which the Government may make such certification of discovery or development, or until the total net amount contributed by the Government, without interest, is fully repaid, whichever occurs first, unless the Government waives its right to a royalty; or (2) if the Government makes a certification of discovery or development, for a period of ten years (or other period fixed by the contract) from the date of the contract, or until the total net amount contributed by the Government, without interest, is fully repaid, whichever occurs first. Said royalty shall be a percentage of the net smelter returns, the net concentrator returns, or other net amounts realized from the sale or other disposition of any such production (including any bonuses), in whatever form disposed of, including ore, concentrates, or metal, as follows:

(a) One and one-half ($1\frac{1}{2}$) percent of any such net amounts not in excess of eight dollars ($8.00) per ton.

(b) One and one-half ($1\frac{1}{2}$) percent of any such net amounts, plus one-half ($\frac{1}{2}$) percent of such net amounts for each additional full fifty cents ($0.50) by which such net amounts exceed eight dollars ($8.00) per ton, but not in excess of five (5) percent of such net amounts.

(For instance: the percentage royalty on a net amount of five dollars ($5.00) per ton, would be one and one-half ($1\frac{1}{2}$) percent; on a net amount of ten dollars ($10.00) per ton, three and one-half ($3\frac{1}{2}$) percent.)

c. Definitions.--As here used, "net smelter returns", "net concentrator returns", and "other net amounts realized from the sale or other disposition", mean gross revenue from sales; or if not sold, the market value of the material after it is mined in the form in which and the place where it is held. In the case of integrated operations in which the material is not disposed of as such, these terms mean what is or would be gross income from mining operations for percentage depletion purposes in income tax determination.

d. Lien for Payment.--To secure the payment of its percentage royalty, the Government shall have and is hereby granted a lien upon the land described in Article 2 and upon any production of minerals therefrom, until the royalty claim is extinguished by lapse of time or is fully paid.

e. Notice to Purchasers.--The Operator shall notify any purchaser of the production of the Government's royalty interest, and shall authorize and direct the purchaser to pay the royalty directly to the Government and to furnish the Government with copies of the settlement sheets; but failure or refusal by the purchaser to comply shall not relieve the Operator of liability to pay any royalty falling due.

f. No Obligation to Produce.--This article is not to be construed as imposing any obligation on the Operator or the Operator's successor in interest to engage in any mining or production operations.

Interior—Duplicating Section, Washington, D. C. 47318

DMA Form

DEFENSE MINERALS ADMINISTRATION
Control Slip

CONTROLLED DOCUMENT

DMA Docket No. 3285

DO NOT DETACH THIS SLIP

Action on this document is recorded and controlled in Reports and Records Branch. Any movement of this document between divisions or offices of DMA or movement outside DMA must be reported to the Reports and Records Branch. Actions taken that affect status of the case must also be reported.

This document has been recorded as

Exploration Assistance

Any action taken to change the type of request for assistance must be promptly reported to the Reports and Records Branch. Use DMA Form 2 for submitting these reports.

1 cy to USBM, USGS

Routing Slip

To:	600	Date	3/22/54
To:	Oper Com	Date	4-9-54
To:	600	Date	4-12
To:	Oper Com	Date	7-7-54
To:	600	Date	7-9
To:		Date	
To:		Date	
To:		Date	
To:		Date	
To:		Date	
To:		Date	
To:		Date	
To:		Date	
To:		Date	
To:		Date	

DO NOT DETACH

CONTROLLED DOCUMENT

Docket File
Surname:
Anderson
Houk
Talbert
Selfridge

UNITED STATES
DEPARTMENT OF THE INTERIOR
DEFENSE MINERALS EXPLORATION ADMINISTRATION
WASHINGTON 25, D. C. 600

JUN 17 1955

Mr. Paul S. Meeker
Route 3
Asheville, North Carolina

Re: Docket No. DMEA-3285 - Mica
Paul S. Meeker, et al.
Bryson #2 Mine
Macon County, North Carolina
Contract No. Ida-E682

Dear Mr. Meeker:

Reference is made to your completed exploration contract with the Government.

We sincerely regret that the work performed did not result in a certification of discovery or development under the provisions of the contract. In the absence of such certification, the Government retains no claim or lien against the property subject to the contract or any future production therefrom. We, therefore, are closing our books and records on this project. Your attention, however, is called to the provisions of the contract which require the operator to keep and preserve certain records for the period indicated.

Your interest in the DMEA exploration program and participation therein are fully appreciated.

Sincerely yours,

Frank E. Johnson (for)
ACTING Administrator

WCAnderson:pk 6/16/55
Copy to: Admr. R. File
Docket
Mr. Chambers
Mr. Dietrich, 5000
Mr. Kiilsgaard, 5222
Field Team, Region V (2)
Mr. Houk
Mr. Carr Bryson and Mrs. Frances Bryson (attached to Field Team copy for forwarding

R.C.G.

UNITED STATES
DEPARTMENT OF THE INTERIOR
DEFENSE MINERALS EXPLORATION ADMINISTRATION
WASHINGTON 25, D. C. 600

Project Summary Report

By: Walter C. Anderson June 16, 1955

1. Docket No. DMEA-3285 - Mica
Contract No. Idm-E682
Bryson No. 2 Mine
Macon County, North Carolina

Operators: E.B. Duvall, F.S. Myers, W.A. Myers and Paul S. Mecker
C/o Paul S. Mecker
Route 3, Deaverview Road
Asheville, North Carolina

Application: Form MF-103 (April 1952) received March 22, 1954.
Work proposed - 50 feet of shaft and 80 feet of drift.
Amount requested - $5,700.00

Operator's property rights -
Lease on the Bryson property covering 6 acres for 12 months with op option to renew dated July 13, 1953.
Owner's Consent to Lien dated July 15, 1954.

2. Contract - Form MF-200A (February 1952) dated July 8, 1954.
Work authorized:

38 feet of shaft @ $50.00/ft	$1,900.00
80 feet of drift and/or crosscut @ $35.00/ft	2,800.00
Total agreed unit cost	$4,700.00
Government participation @ 75%	$3,525.00

Amendments - No. 1 September 27, 1954 Allows drifting from any level in shaft instead of just from the bottom.

Work completed:

33 feet of shaft @ $50.00/ft	$1,650.00
77.5 feet of drift @ $35.00/ft	2,712.50
Total accepted cost	$4,362.50
Government participation @ 75%	$3,271.88

Work began August 2, 1954 and completed October 18, 1954.
Field Team Final Report received December 9, 1954.
Operator's Final Report received December 9, 1954.
Production: 500 pounds of "mine-run" mica from which 8.93 pounds trimmed sheet mica was sold for $108.37.

Royalty - 5% of $108.37, or $5.42 is due the Government as of March 4, 1955.
No equipment was purchased under the contract.

3. Audit - Certificate issued December 7, 1954.

Accepted cost	$4,362.50
Government participation	$3,271.88

4. Certification of discovery - none issued

5. Comments:

How conducted - All work in which the Government participated is acceptable. Contract work not done amounts to 5 feet of shaft and 2½ feet of drift. For all practical purposes the project was completed.

Operation - Good

Engineering - Reporting by Operator was acceptable.

Geological premise - The premise that an east-west conformable zoned pegmatite would continue in depth did not materialize, as the pegmatite was displaced by several close-spaced, parallel faults.

Geological Criteria upon which work was based:

1. Conformable zoned pegmatite 8½ feet thick with a quartz core 4 feet thick.
2. Mica concentration along both hanging and footwall of the pegmatite.
3. Mica - up to 5 inches across, ruby, hard, clear and splits well.

Criteria developed during project:

1. Pegmatite displaced by faults.
2. Mica: broken and warped by post-pegmatite movement.

Future possibilities - Additional exploration work is not warranted.

Recommendations - The Nonmetallic Minerals Division concurs in Field Team's recommendation not to certify the project. The commodity members of the Geological Survey and Bureau of Mines concur.

Walter C. Anderson

Walter C. Anderson, Mining Engineer

674

RECEIVED
JUL 23 1956

Semi-Annual Reports of Certified Projects

Reporting Period 12/1/55 to 6/6/56 Date of Examination 6/6/56

Operator Sam L. and John Phillips, and Lin Carpenter, Spruce Pine, N. C., and Homer and Jeter Boone of Rt. #3, Bakersville, N. C.

Mine Name Mudcut Mine (mica)

County and State Macon County, North Carolina

Docket Number and Commodity --- DMEA-3287

Contract Number --- Idm-E 674

Date of Contract June 1, 1954

Date of Certification July 22, 1955

Expiration Date of Royalty Payments June 1, 1964

Total Amount of Contract $10,838.00

Total Expenditures under Contract 10,538.00

Amount of Government Participation at 75 % $7,903.50

Royalty Payments this Period None

Previous Royalty Payments $617.71

Total Royalty Payments to Date 617.71

Percent Government Participation Repaid 7.82%

Royalty Due on Production to Date None

Royalty Remarks

This visit to the mine shows no period activity, hence no royalty.

Original Estimate of Reserves (from final Engr.-Geol. Report):	Indicated (above 60' level)	35,000 pounds of mine run book
	Inferred (60-120' levels)	60,000 pounds of mine run book

Increase (or Decrease) of Reserves by work performed subsequent to original and last Field Team estimates: No activity during period

Revised Estimate of Reserves:

Production this Period (Ore or Concentrates) in suitable detail None

Amount of Previous Production (since date of contract)

Total DMEA Production to Date: Sales totaling $12,354.20 have been made.

~~Percent of Revised Reserves Mined~~

Production Remarks:

Rubysheet mica	629.55 lbs.	$8,347.92
Non-ruby sheet	925.09 "	3,318.93
Punch	6,141.00 "	489.35
Scrap	13,200.00 "	198.00
Total	20,895.64 "	$ 12,354.20

Other Remarks:

(Investments, description of additional exploration or development work, production facilities, and plant installations, etc. since completion of the exploration project work.)

All equipment has been removed from the property, and the shaft is full of water. No activity during this period.

Signed Lawrence E. Shirley Engineer
Lawrence E. Shirley
U. S. Bureau of Mines

IN REPLY REFER TO:

UNITED STATES
DEPARTMENT OF THE INTERIOR
GEOLOGICAL SURVEY
WASHINGTON 25, D. C.

January 14, 1955

DMEA Docket 3285 (Mica)
Bryson No. 2 mine
Macon County, N. C.
Contract Idm-E682

Memorandum

To: Mr. L. G. Houk, Chief, Nonmetallic Minerals Division, Defense Minerals Exploration Administration

From: Thor H. Kiilsgaard, U. S. Geological Survey

Subject: Review of Field Team Final Report

Exploration completed under the project consisted of deepening an existing shaft a distance of 33 feet and driving a total of 77.5 feet of drifts on two levels from the shaft.

The project was designed to explore an east-trending, conformable, zoned pegmatite. Exploration found the pegmatite to be discontinuous and to be displaced by several close-spaced, parallel faults. Additional exploratory work on the property is not recommended by the Field Team.

About 500 pounds of badly cracked and warped "mine-run" mica was recovered during the course of project work, which was not of strategic quality.

The Field Team concludes that no significant amount of strategic mica was found by project work and recommends that no certification of discovery be issued to the operator. I concur with the Field Team recommendations.

Thor H. Kiilsgaard

Thor H. Kiilsgaard
Geologist

UNITED STATES
DEPARTMENT OF THE INTERIOR
BUREAU OF MINES
WASHINGTON 25, D. C.

DEPARTMENT OF THE INTERIOR
Defense Minerals Administration
RECEIVED
DEC 28 1954

December 27, 1954

Memorandum

To: Nonmetallic Minerals Division
Defense Minerals Exploration Administration

From: Donald R. Irving, Acting for
Chief, Ceramic and Fertilizer Materials Branch

Subject: DMEA-3285 (mica)

Applicant: Paul Meeker

Name and Location of Property: Bryson No. 2 Mine
Macon County, North Carolina

Contract Number: Idm-E 682

Date of Field Team Final Report: December 7, 1954

Date Rec'd. by Ceram. & Fert. Mat. Br.: December 14, 1954

Field Team Recommendation:

1. No certification.

Comments:

1. About 9 pounds of strategic mica was sold to GSA.

2. Reserves of mica are negligible.

3. Expenditures -

Total approved	-	$4,700.00
Total cost	-	4,362.50
Gov't. share	-	3,271.88
Value of production during operation	-	108.37

Recommendation:

I concur in the field team's recommendation to deny certification.

Donald R. Irving

Donald R. Irving

UNITED STATES
DEPARTMENT OF THE INTERIOR
DEFENSE MINERALS EXPLORATION ADMINISTRATION

COPY

~~WASHINGTON 25, D.C.~~

Room 13, Post Office Bldg.
Knoxville 2, Tenn.

December 7, 1954

Memorandum

To: Operating Committee, DMEA - Washington

From: Field Team, DMEA - Region VII - Knoxville, Tennessee

Subject: Final Field Team and Operators Reports:
DMEA-3253, Idm-E 669 (mica)
DMEA-3285, Idm-E 682 (mica)

Enclosed are four copies each of the Field Team and Operator's final report on the subject exploration contracts.

We agree, in both cases, with the recommendation that certification should not be issued.

/s/ Robert A. Laurence

/s/ Wm. A. Beck, for V. J. Lynch
U. S. Bureau of Mines

RAL/km
cc:
Beck
Lynch
Files

Reviewed by
DMEA OPERATING COMMITTEE
12-13-54
(date)

UNITED STATES
DEPARTMENT OF THE INTERIOR

DEFENSE MINERALS EXPLORATION ADMINISTRATION

FINAL REPORT BY FIELD TEAM
DMEA REGION VII

On
DMEA-3285, BRYSON No. 2 MINE (mica)
Franklin, Macon County, N. C.

BY

K. H. Teague and D. H. Amos, Geologists
U. S. Geological Survey

and

L. E. Shirley, Mining Engineer
U. S. Bureau of Mines

December 7, 1954

Reviewed by
DMEA OPERATING COMMITTEE
12-13-54
(date)

FINAL REPORT
On
BRYSON # 2 MINE- DMEA-3285 (mica)
Idm-E 682.

Operators: E. B. Duvall, F. S. Myers, W. A. Myers, and Paul Meeker.
c/o Paul Meeker, Route # 3, Deaverview Rd. Asheville, N. C.

Location: On the south side of Cowee Creek Road, about 1/2 mile east of West Mill Post Office, and 5.6 airline miles N. 14° W. of Franklin, Macon County, N. C.

Work completed under the contract consisted of deepening an existing vertical shaft an additional 33 feet and driving 77.5 feet of laterals from this shaft. Most of the mica discovered by this work was badly broken and warped by post-pegmatite movement and not of strategic quality; thus, no certification of discovery should be issued. No additional exploratory work is warranted.

Work began on this project August 2, 1954 and was completed October 18, 1954. An existing 12-foot shaft was deepened to a depth of 45 feet and timbered. From the 45-foot level a drift was driven 13.5 feet in a N. 20° E. direction. As the mica was badly broken by movement on this level, the shaft was floored at the 30-foot level and a 64-foot drift was driven eastward.

A zoned pegmatite that is essentially conformable is present in the shaft and laterals. Its strike varies between N. 70° E. and N. 70° W. and dips from about 70° to the south at the surface to 80° to the north at the 30-foot level. The body consists of a discontinuous quartz core up to 3 feet thick enclosed by a zone of coarse-grained kaolinized potash feldspar, quartz, and sparse muscovite 0-3 feet thick. In places the latter zone appears laterally to take the place of the quartz core. An outer zone 2-4 feet thick of medium-grained kaolinized feldspar, quartz and muscovite encloses the two central zones. The pegmatite is displaced by several closely spaced parallel faults. The strike of the fault planes are parallel to the pegmatite but the dips crosscuts the body acutely, being 45-60° to the north.

About 500 pounds of "mine-run" mica were recovered during the work most from the shaft at about 25 feet from the collar. All the mica obtained from the laterals was badly cracked and warped and not of strategic quality. A total of 8.93 pounds of trimmed sheet mica worth $108.37 was sold to the Spruce Pine Depot.

No significant reserves of strategic mica were developed by work under this contract.

Expenditures:	(a)	Total approved	$4,700.00
	(b)	Total cost of project	4,362.50

(c)	Government's share of cost	$3,271.88
(d)	Government's share unexpended	253.12
(e)	Value of production during operation	108.37

The operation was conducted in a satisfactory and efficient manner. No equipment was purchased under the contract.

December 7, 1954.

K. H. Teague and D. H. Amos, Geologists
U. S. Geological Survey

L. E. Shirley, Mining Engineer
U. S. Bureau of Mines

z

UNITED STATES
DEPARTMENT OF THE INTERIOR
DEFENSE MINERALS EXPLORATION ADMINISTRATION
ROOM 25 POST OFFICE BLDG.
WASHINGTON 25, D.C.
KNOXVILLE 2, TENN.

DEC 9 1954

December 7, 1954

Memorandum

To: Operating Committee, DMEA - Washington

From: Field Team, DMEA - Region VII - Knoxville, Tennessee

Subject: Final Field Team and Operators Reports :
DMEA-3251, Idm-E 669 (mica)
DMEA-3285, Idm-E 682 (mica)

Enclosed are four copies each of the Field Team and Operator's final report on the subject exploration contracts.

We agree, in both cases, with the recommendation that certification should not be issued.

Robert A. Laurence

Robert A. Laurence
EXECUTIVE OFFICER
DMEA REGION VII

Wm A. Beck by: zm

Wm. A. Beck, for V. J. Lynch
U. S. Bureau of Mines

November 22, 1954

Mr. Robert A. Laurence
Executive Officer, DMEA Region VII
Room 13, Post Office Building
Knoxville, Tennessee

Re: DMEA-3285, Idm-E 682 (mica)
Bryson No. 2 Mine, Macon County

Dear Mr. Laurence:

Please accept the following as the final engineering and geological report of the above contract:

FINAL REPORT

Date of Contract Completion: October 18, 1954

Summary of Work Completed:

Deepening of Shaft:

Authorized by Contract:	38 feet
Actually completed:	33 feet

Drifting:

At bottom of shaft:	13.5 feet
16ft level in shaft:	64. feet

(Total authorized was 80 feet)

Contract not completed (5 ft of shaft and 2.5 fet of drift) because of instructions from Government Engineers.

Mica Sales: 8.93 lbs for a total sales price of 108.37 - Mica was sold unworked for 50% of sales price above. Mica was cut and graded by A. W. Moore. Invoice Mr. Moore received from sale is attached.

Reserves:
At time work was ceased there were no reserves of ore in sight and vein and other workings did not show any signs of the possibility of ore reserves.

Respectfully submitted,

Paul S. Meeker

Paul S. Meeker, Ed Duvall, F. S. Myers and W. A. Myers, Partners
c/o Paul S. Meeker
Route # 3
Asheville, N. C.

NOV 26 1954

General Services Administration - Region 4
Mica Purchase Depot, Spruce Pine, N. C.

LOT TICKET - INVOICE WORKSHEET
RUBY MICA

Lot No. SPAR-892

Date 11-10-54

Authorization No.

Mine

Name and Address

Arthur W. Moore
(Bryson Mine)

INVOICE AND PURCHASE EVALUATION

QUALITY	Half Trim			Full Trim		
	Pounds	Price per Pound	Amount	Pounds	Price per Pound	Amount
Good Stained and Better Grades No. 3 and Larger		-			$70.00	
Grades No. 4 and 5				.37	40.00	14.80
Grades No. 5½ and 6				5.02	15.00	75.30
Totals						
Stained Grades No. 3 and Larger		$12.00			18.00	
Grades No. 4 and 5		5.00		.19	8.00	1.52
Grades No. 5½ and 6		3.00		3.35	5.00	16.75
Totals						
Heavy Stained Grades No. 3 and Larger		8.00			13.00	
Grades No. 4 and 5		4.00			6.00	
Grades No. 5½ and 6		2.00			3.00	
Totals						
LOT TOTALS				8.93		108.37

Signature of Buyer

Percent Good Stained or Better

Half Trim

Full Trim

Received for Processing - Pounds

Date

Received By

Name

Title

Form No. R4-410
March 1954

RECEIVED
NOV 26 1954
U. S. Geological Survey
Geologic Division
Knoxville, Tenn.

8)108,37(13.54
8
28
24
43
40
37

November 22, 1954

Mr. Robert A. Laurence
Executive Officer, DMEA Region VII
Room 13, Post Office Building
Knoxville, Tennessee

Re: DMEA-3285, Idm-E 682 (mica)
Bryson No. 2 Mine, Macon County

Dear Mr. Laurence:

Please accept the following as the final engineering and geological report of the above contract:

FINAL REPORT

Date of Contract Completion: October 18, 1954

Summary of Work Completed:

Deepening of Shaft:

Authorized by Contract:	38 feet
Actually completed:	33 feet

Drifting:

At bottom of shaft:	13.5 feet
16ft level in shaft:	64. feet

(Total authorized was 80 feet)

Contract not completed (5 ft of shaft and 2.5 fet of drift) because of instructions from Government Engineers.

Mica Sales: 8.93 lbs for a total sales price of 108.37 - Mica was sold unworked for 50% of sales price above. Mica was cut and graded by A. W. Moore. Invoice Mr. Moore received from sale is attached.

Reserves:
At time work was ceased there were no reserves of ore in sight and vein and other workings did not show any signs of the possibility of ore reserves.

Respectfully submitted,

Paul S. Meeker

Paul S. Meeker, Ed Duvall, R. S. Myers
and W. A. Myers, Partners
c/o Paul S. Meeker
Route # 3
Asheville, N. C.

RECEIVED
NOV 26 1954
U. S. Geological Survey
Geologic Division
Knoxville, Tenn.

November 22, 1954

Mr. Robert A. Laurence
Executive Officer, DMEA Region VII
Room 13, Post Office Building
Knoxville, Tennessee

Re: DMEA-3285, Idm-E 682 (mica)
Bryson No. 2 Mine, Macon County

Dear Mr. Laurence:

Please accept the following as the final engineering and geological report of the above contract:

FINAL REPORT

Date of Contract Completion: October 18, 1954

Summary of Work Completed:

Deepening of Shaft:

Authorized by Contract:	38 feet
Actually completed:	33 feet

Drifting:

At bottom of shaft:	13.5 feet
16ft level in shaft:	64. feet

(Total authorized was 80 feet)

Contract not completed (5 ft of shaft and 2.5 fet of drift) because of instructions from Government Engineers.

Mica Sales: 8.93 lbs for a total sales price of 108.37 - Mica was sold unworked for 50% of sales price above. Mica was cut and graded by A. W. Moore. Invoice Mr. Moore received from sale is attached.

Reserves:
At time work was ceased there were no reserves of ore in sight and vein and other workings did not show any signs of the possibility of ore reserves.

Respectfully submitted,

Paul S. Mecker

Paul S. Mecker, Ed Duvall, F. S. Myers and W. A. Myers, Partners
c/o Paul S. Mecker
Route # 3
Asheville, N. C.

NOV 30 1954
UTILIZED

RECEIVED
NOV 26 1954
Knoxville, Tenn.

November 22, 1954

Mr. Robert A. Laurence
Executive Officer, DMEA Region VII
Room 13, Post Office Building
Knoxville, Tennessee

Re: DMEA-3285, Idm-E 682 (mica)
Bryson No. 2 Mine, Macon County

Dear Mr. Laurence:

Please accept the following as the final engineering and geological report of the above contract:

FINAL REPORT

Date of Contract Completion: October 18, 1954

Summary of Work Completed:

Deepening of Shaft:

Authorized by Contract:	38 feet
Actually completed:	33 feet

Drifting:

At bottom of shaft:	13.5 feet
16ft level in shaft:	64. feet

(Total authorized was 80 feet)

Contract not completed (5 ft of shaft and 2.5 fet of drift) because of instructions from Government Engineers.

Mica Sales: 8.93 lbs for a total sales price of 108.37 - Mica was sold unworked for 50% of sales price above. Mica was cut and graded by A. W. Moore. Invoice Mr. Moore received from sale is attached.

Reserves:
At time work was ceased there were no reserves of ore in sight and vein and other workings did not show any signs of the possibility of ore reserves.

Respectfully submitted,

Paul S. Meeker

Paul S. Meeker, Ed Duvall, F. S. Myers
and W. A. Myers, Partners
c/o Paul S. Meeker
Route # 3
Asheville, N. C.

NOV 29 1954
BILLED

RECEIVED
NOV 26 1954
U. S. Geological Survey
Knoxville, Tenn.

Docket Copy
Surname:
Houk
Selfridge
Mitkenoff

UNITED STATES
DEPARTMENT OF THE INTERIOR
DEFENSE MINERALS EXPLORATION ADMINISTRATION
WASHINGTON 25, D. C. 600

NOV 5 - 1954

Mr. Robert A. Laurence
Executive Officer, DMEA
Field Team, Region VII
Room 13, Post Office Bldg.
Knoxville 2, Tennessee

Subject: Docket No. DMEA-3285 - Mica
Paul S. Meeker, et al.
Bryson No. 2 Mine
Macon County, North Carolina
Contract No. Idm-B682

Dear Mr. Laurence:

Reference is made to Field Team's Interim Report of October 18, 1954, recommending that the remaining footage of the contract, five feet of shaft and 2.5 feet of drift, not be expended if the Operators are in agreement.

We concur in this recommendation and advise that the contract may be considered completed because substantially all the work has been finished.

Sincerely yours,

George C. Selfridge
Chairman, Operating Committee (JHB)

Approved:

J. H. Hedges (JHB)
Member, Bureau of Mines

E. L. Newcomb (JHB)
Member, Geological Survey

WCAnderson:gad 11/4/54
Copy to: Admr. R. File
Docket
Operating Committee
Mr. Kiilsgaard, 5222
Mr. Dietrich, 3061
Mr. Houk

R.C.S.

UNITED STATES
DEPARTMENT OF THE INTERIOR
DEFENSE MINERALS EXPLORATION ADMINISTRATION
WASHINGTON 25, D. C. 600

November 4, 1954

Memorandum

To: Administrator

From: Nonmetallic Minerals Division

Subject: Amendment No. 1 - Docket No. DMEA-3285 - Mica
Paul S. Meeker, et al.
Bryson No. 2 Mine
Macon County, North Carolina
Contract No. Idm-E682

The Nonmetallic Minerals Division concurs in Amendment No. 1 to the subject contract as written and executed in the field. Instead of drifting from the bottom of the shaft as stipulated in the contract, this amendment provides for drifting from any point of the shaft.

This was necessary because of extensive shearing and faulting at the bottom of the shaft.

W. C. Anderson
Nonmetallic Minerals Division

UNITED STATES
DEPARTMENT OF THE INTERIOR
DEFENSE MINERALS EXPLORATION ADMINISTRATION
ROOM 2[illegible] POST OFFICE BLDG.
KNOXVILLE 2, TENN.

WASHINGTON, D.C.

OF THE INTERIOR
Minerals Administration
RECEIVED
NOV 1 - 1954

October 29, 1954

Memorandum

To: Operating Committee, DMEA - Washington

From: Acting Executive Officer, DMEA - Region VII

Subject: DMEA-3285, Duvall, Myers, Myers & Meeker (mica) AMENDMENT No. 1

Transmitted are three signed copies of the subject Amendment. The usual distribution of the other copies has been made.

This amendment was necessary because of extensive shearing and faulting at the original level turned off. It was necessary to turn off another level at a higher elevation.

Wm. A. Beck
ADMINISTRATION

RECEIVED
DEC 6 1954
GENERAL COUNSEL
DEFENSE MINERALS
ADMINISTRATION

...T OF THE INTERIOR
...ense Minerals Administration
RECEIVED
OCT 18 1954

INTERIM REPORT

DMEA-3285 Idm-E682 (mica) BRYSON NO. 2 MINE

OPERATOR: E. B. Duvall, F. S. Myers, W. A. Myers and Paul S. Meeker, c/o Paul S. Meeker, Route #3, Asheville, N. C.

LOCATION: On the south side of Cowee Creek Road, about 1/2 mile east of West Mill Post Office, 5.6 airline miles N 14° W of Franklin, Macon County, N. C.

Drifting is underway from a new level on this contract and considerable progress has been made since the last visit. Instructions were given concerning future work.

Turnoff has been made from the 30 ft. shaft level to the northeast and 41 ft. of level work has been accomplished in pegmatite material. 20 ft. of drift was driven in a N 55° E direction and the additional 21 feet was driven S70° E. The body was followed for the entire distance and the present face shows about 5 feet of pegmatite. Instructions were given for driving a crosscut to the south in order to define the thickness of the body and also to locate a possible mica shoot between the present point and the south wall. A massive quartz core is exposed near the point of turnoff which extends for about 15 feet. With the exception of this core most of the material is composed of kaolinized feldspar and small broken mica. At least 3 zones of movement were observed along the drift walls.

The operator was advised to use caution in working in this weathered ground. Some timbers in the form of stulls have been set, and lagging was advised if conditions warrant its use. Progress on this contract is satisfactory.

Mr. W. A. Beck, member of the Field Team, Region VII, accompanied the examiners on this visit to the mine.

L. E. Shirley

L. E. Shirley, Mining Engineer
U. S. Bureau of Mines

K. H. Teague D. H. Amos

K. H. Teague & D. H. Amos, Geologists
U. S. Geological Survey

October 4, 1954

DEPARTMENT OF THE INTERIOR
Defense Minerals Administration
RECEIVED
OCT 29 1954

INTERIM REPORT

DMEA-3285, Idm-E 682 (mica) BRYSON No.2 MINE

Operator: E. B. Duvall, Myers, Myers and Paul S. Meeker, c/o Paul S. Meeker Route #3, Asheville, N. C.

Location: On the south side of Cowee Creek Road, about 1/2 mile east of West Mill Post Office, 5.6 airline miles N. 14° W. of Franklin, Macon County, North Carolina.

A total of 77.5 feet of lateral work has been completed on this contract to date; 13.5 feet on the 45-foot level and 64 feet on the 30-foot level. Work completed since the last interim report consists of an 8-foot crosscut to the south wall of the pegmatite and a 15-foot drift eastward along the south wall. Material encountered consisted of a thin quartz core flanked by kaolinized potash feldspar and associated small badly broken and sheared muscovite. The true thickness of the pegmatite cannot be obtained because of displacements along several parallel faults.

The Operator was advised by the field examiners to discontinue work under the contract. It is recommended that the footage remaining on the contract (5 feet of shaft and 2.5 feet of lateral) not be expended.

Inpsection date: October 18, 1954.

K. H. Teague D. H. Amos

K. H. Teague and D. H. Amos, Geologists
U. S. Geological Survey

DEPARTMENT OF THE INTERIOR
Defense Minerals Administration
RECEIVED
OCT - 4 1954

INTERIM REPORT

DMEA-3285 Idm-E682 (mica) BRYSON NO. 2 MINE

OPERATOR: E. B. Duvall, F. S. Myers, W. A. Myers and Paul S. Meeker, c/o Paul S. Meeker, Rt. #3, Asheville, N. C.

LOCATION: On the south side of Cowee Creek Road, about 1/2 mile east of West Mill Post Office, 5.6 airline miles N 14° W of Franklin, Macon County, N. C.

Shaft sinking has been completed to a total depth of 45 feet and turnoff has been made to the northeast. After an examination of the pegmatite was made at this level instructions were given to floor the shaft at the 30 ft. level and turnoff to the northeast in an attempt to place the work in better ore.

The shaft was bottomed in material composed of both biotite gneiss and pegmatite. 13.5 feet of drift driven in a N 30° E direction shows considerable evidence of faulting, with subsequent crushing of the mica. Evidence gathered during shaft sinking shows undistrubed pegmatite containing better quality mica near the 30 ft. shaft level. Future work will be conducted at this location until another examination can be made.

L. E. Shirley

L. E. Shirley, Mining Engineer
U. S. Bureau of Mines

K. H. Teague D. H. Amos

K. H. Teague & D. H. Amos, Geologists
U. S. Geological Survey

September 21, 1954

UNITED STATES
DEPARTMENT OF THE INTERIOR
DEFENSE MINERALS EXPLORATION ADMINISTRATION
ROOM 2305 POST OFFICE BLDG.
KNOXVILLE 2, TENN.

WASHINGTON 25, D.C.

September 10, 1954

Department of the Interior
Defense Minerals Administration
RECEIVED
SEP 13 1954

Memorandum

To: Operating Committee, DMEA - Washington

From: Acting Executive Officer, DMEA - Region VII

Subject: DMEA-3285, Idm-E 682 (?) Mica. E. B. Duvall, F. S. Myers, and Paul S. Meeker. Bryson No. 2 Mine, Macon Co., N. C.

Mrs. Cora Piper, Region VII, Finance Officer, has called to our attention a discrepancy in the Idm numbers on the copies of the subject contract. The Field Teams copy has Idm-E 681, and the Finance Office copy has Idm-E 682. The Operator's MF-104's and 104A's for August had Idm-E 681, while his narrative had Idm-E 682.

Please advise this office the correct number so that corrections may be made.

Wm. A. Beck

Wm. A. Beck

SEP 1 0 1954

Defense Minerals Administration
RECEIVED
SEP 1 3 1954

Memorandum

To: Operating Committee, DMEA - Washington

From: Acting Executive Officer, DMEA - Region VII

Subject: DMEA-3285, Idm-E 682 (?) Mica. E. B. Duvall, F. S. Myers, and Paul S. Meeker. Bryson No. 2 Mine, Macon Co., N. C.

Mrs. Cora Piper, Region VII, Finance Officer, has called to our attention a discrepancy in the Idm numbers on the copies of the subject contract. The Field Teams copy has Idm-E 681, and the Finance Office copy has Idm-E 682. The Operator's MF-104's and 104A's for August had Idm-E 681, while his narrative had Idm-E 682.

Please advise this office the correct number so that corrections may be made.

Wm. A. Beck

WAB/mm
cc:
Beck
Lynch
Files

DEPARTMENT OF THE INTERIOR
Bureau of Mines
Minerals Administration
RECEIVED
SEP 16 1954

INTERIM REPORT

DMEA-3285, Idm-E 682, BRYSON #2 MINE (mica)

Operator: Duvall, Myers, Myers & Meeker. c/o Paul S. Meeker, Asheville, N. C.

Location: On the south side of Cowee Creek Road about one-half mile east of West Mill post office and 5.6 airline miles N. 40° West of Franklin, Macon County, N. C.

During the last two weeks the shaft on the project has been deepened 7 feet to 42 feet. It is bottomed in slightly weathered biotite gneiss.

The pegmatite left the shaft from the southeast corner at the 40-foot level.

The Operator was instructed to sink the shaft to the 45-foot level, then start crosscutting to the southeast.

Progress on this project is satisfactory.

Exam date: September 7, 1954.

K. H. Teague

K. H. Teague, Geologist
U. S. Geological Survey

Z

INTERIM REPORT

DMEA-3285, Idm-E 682, BRYSON #2 MINE
(mica)

Operators: E. B. Duvall, F. S. Myers, W. A. Myers and Paul S. Meeker
Asheville, North Carolina

Location: On the south side of Cowee Creek Road about one-half mile east of West Mill Post Office and 5.6 airline miles N. 14° West of Franklin, Macon County, N. C.

The shaft is at 35 feet, 31 feet of which is timbered.

Pegmatite is still present in the shaft, but no mica has been recovered during the last five feet. The present shaft bottom exposed only about two feet of pegmatite; the remainder is biotite gneiss. The pegmatite trends N. 15° E. and dips 45° SE.

Progress on this project has been slow during the past two weeks, because of the lack of adequate drilling and pumping equipment. These conditions are being corrected.

Aug. 24, 1954.

K. H. Teague

K. H. Teague, Geologist
U. S. Geological Survey

z

INTERIM REPORT

DMEA-3285, Idm-E 682, BRYSON #2 MINE

Operator: E. B. Duvall, F. S. Myers, W. A. Myers and Paul S. Meeker, Ptnrs.
Asheville, N. C.

Location: On the south side of Cowee Creek Road about one-half mile east of West Mill post office and 5.6 airline miles N. 14° W. of Franklin, Macon County, N. C.

Shaft sinking has begun and is now to a depth of 27 feet; 15 feet being done under the contract. The entire shaft is timbered and has a partitioned manway.

The entire shaft, except for about 1-1/2 feet on the southwest side, is in pegmatite. About 200 pounds of "mine-run" mica of good quality ~~was~~ were recovered from the last 5 feet of shaft sinking.

Progress on this contract is satisfactory.

Date of Exam: August 9, 1954.

K.H. Teague D.H. Amos

K. H. Teague, and D. H. Amos, Geologists
U. S. Geological Survey

s

INTERIM REPORT

On

DMEA-3285, Idm-E 682 (mica) Bryson No. 2 Mine

Operator: E. B. Duvall, F. S. Myers, W. A. Myers, and Paul S. Meeker. c/o Paul S. Meeker, Asheville, N. C.

Location: On the southside of Cowee Creek Road, about 1/2 miles East of West Mill Post Office, and 5.6 airline miles N. 14° W. of Franklin, Macon County, N. C.

Work preparatory to deepening the existing shaft has been completed. A boom has been erected, equipment brought to the site and a pump installed. A three-phase electric line has been laid to the site and timber in the existing shaft has been repaired. Work under the contract is to begin soon. The operator was advised on safety practices.

Date of Exam:
July 26, 1954.

D. H. Amos

D. H. Amos, Geologist
U. S. Geological Survey

z

UNITED STATES
DEPARTMENT OF THE INTERIOR
DEFENSE MINERALS EXPLORATION ADMINISTRATION
~~WASHINGTON 25, D.C.~~
ROOM 13, POST OFFICE BLDG.
KNOXVILLE 2, TENN.

July 19, 1954

Memorandum

To: Operating Committee, DMEA - Washington

From: Executive Officer, DMEA - Region VII

Subject: Signed Contract, Idm-E 682, DMEA-3285, E. B. Duvall , et al.

Transmitted herewith are three signed copies of the subject contract and Owner's Consent to Lien. The usual distribution of the other copies has been made from this office.

Robert A. Laurence

Robert A. Laurence

DOCKET FILE
Surname:
Anderson
Houk
Talbert
Selfridge
Hedges

UNITED STATES
DEPARTMENT OF THE INTERIOR
DEFENSE MINERALS EXPLORATION ADMINISTRATION
WASHINGTON 25, D. C. 600

JUL 8 - 1954

Mr. Robert A. Laurence
Executive Officer, DMEA
Field Team, Region VII
Room 13, Post Office Bldg.
Knoxville 2, Tennessee

Subject: Docket No. DMEA-3285 - Mica
Paul S. Meeker, et al.
Bryson #2 Mine
Macon County, North Carolina

Dear Mr. Laurence:

Please find herewith the original and five copies of a contract covering the subject exploration project which have been signed by the Government with register number and effective date as shown. It is subject to the attachment of new Owner's Consent to Lien forms, executed by Carr Bryson and wife, Frances Bryson. A copy of memorandum from the Legal Division is enclosed.

If the contract meets with your approval present it to the Operators for approval and signature. Please explain to the Operators that the contract, when executed, is a firm commitment under the terms of which they are obligated to complete the work outlined at the agreed unit cost. If any part of this contract does not have either your approval or that of the Operators and cannot be amended within your delegated authority, then the original and all copies of the contract are to be returned to this office, together with the proposed changes for consideration.

After execution of the contract, the copies are to be distributed in the usual manner. Copies of memoranda from the Geological Survey, dated May 18, 1954, and from the Bureau of Mines, dated June 4, 1954, are enclosed.

Sincerely yours,

George C. Selfridge
Chairman, Operating Committee (JHB)

Approved:

J. H. Hedges (JHB)
Member, Bureau of Mines

Philip W. Guild (JHB)
Member, Geological Survey

Enclosures 17

Copy to: Admr. R. Nile
Docket File
Operating Committee
Mr. Dietrich, 3061
Mr. Larrabee, 5216
Mr. Houk

WCAnderson:gad 7/1/54

R.C.S.

File copy
Surname

UNITED STATES
DEPARTMENT OF THE INTERIOR
DEFENSE MINERALS EXPLORATION ADMINISTRATION
WASHINGTON 25, D. C. 140

June 29, 1954

Memorandum

To: The Administrator **Through:** L. G. Houk

From: Acting Assistant Solicitor, DMEA

Subject: Docket No. DMEA-3285, E. B. Duvall, F. S. Myers, W. A. Myers and Paul S. Meeker, a Partnership (Mica)

Attached is a contract covering the above-described project in satisfactory legal form for execution, subject to the attachment of new Owner's Consent-to-Lien forms, executed by Carr Bryson and wife, Frances Bryson. The appropriate forms are attached to this memorandum.

J. L. Hofflund

J. L. Hofflund
Acting Assistant Solicitor

Attachments
HCRubin:lm

Copies to: Docket
L.G. Houk(2)
J.L. Hofflund
H.C. Rubin
Chron.

UNITED STATES
DEPARTMENT OF THE INTERIOR
DEFENSE MINERALS EXPLORATION ADMINISTRATION
WASHINGTON 25, D. C. 140

June 29, 1954

Memorandum

To: The Administrator Through: L. G. Houk

From: Acting Assistant Solicitor, DMEA

Subject: Docket No. DMEA-3285, E. B. Duvall, F. S. Myers, W. A. Myers and Paul S. Meeker, a Partnership (Mica)

Attached is a contract covering the above-described project in satisfactory legal form for execution, subject to the attachment of new Owner's Consent-to-Lien forms, executed by Carr Bryson and wife, Frances Bryson. The appropriate forms are attached to this memorandum.

J. L. Hofflund
Acting Assistant Solicitor

Attachments

NORTH CAROLINA
MACON COUNTY

THIS LEASE, made and entered into this the 30th day of April, 1954, by and between CARR BRYSON and wife FRANCES BRYSON, parties of the first part, and W. A. MYERS, F. S. MYERS, PAUL MEEKER, and E. B. DUVALL, parties of the second part, of the above County and State;

W I T N E S S E T H:

That subject to the terms and conditions hereinafter set forth the said parties of the first part have let and leased unto the said parties of the second part and their assigns the exclusive right and privilege to mine, dig and remove all minerals now in, under or upon a certain tract or parcel of land lying and being in Macon County, North Carolina, and more particularly described as follows:

> Being on Cowee Creek, ½ mile east of Cowee High School, being four acres more orless, owned by Carr Bryson, and lying southwest of his house 200 yards, more or less, to the South of the Cowee Road.

THE TERMS AND CONDITIONS OF THIS LEASE ARE AS FOLLOWS:

1. Unless sooner terminated as herein provided, this lease shall exist and continue for a period of TEN YEARS, with the further right to renew for an additional like period.

2. As rental or royalty, the parties of the second part or their assigns shall pay to the parties of the first part or their legal representative a sum equal to twelve and one-half per cent (12½%) of all the sheet or patter mica, One Dollar and Fifty Cents ($1.50) per ton for scrap mica, and fifty cents ($.50) per ton for all feldspar. In the event the parties of the second part or their assigns shall in the course of conducting mining operations upon said property, encounter any other metals or minerals not specifically set forth herein in merchantable quantities, said parties of the second part or their assigns shall recover the same, use their best efforts to obtain a market therefor and pay the parties of the first part a royalty equal to that

prevailing in the community for metals or minerals of like character.

3. That all royalties shall be paid between the first and tenth of each calendar month following production, sale and receipt of the sale price thereof.

4. Parties of the second part or their assigns shall keep a correct and itemized record of all operations upon the premises, including transactions relating to the sale of minerals from the premises, said records to be open to the inspection of the parties of the first part at any time upon reasonable request.

5. The parties of the second part will commence operations upon the premises within ninety (90) days from the date of this lease, and shall not cease operations at any time for a period exceeding ninety (90) working days; failure to comply with these provisions shall cause the lease to become null and void without further action on the part of parties of the first part.

So long as this lease remains in force and effect the parties of the second part or their assigns in connection therewith shall have the following rights and privileges:

(a) The right to use the surface of said lands to the full extent that such use is reasonable, convenient or necessary in mining and removing the minerals from said lands and to use any portion of said surface for the purpose of dumping mine refuse and tailings as may be reasonable, necessary or convenient. In this connection, however, the parties of the second part agree that no unnecessary damage shall be done to the property in the process of conducting mining operations thereon.

(b) The right to construct and place upon said lands buildings and machinery and to remove the same.

(c) The right to cut and use upon said lands for the purposes herein set out any standing timber thereon at the time of such use.

(d) The right to use any water upon said property as may be necessary in the course of said operations.

(e) The right to construct and maintain roads in such locations as the parties of the second part may deem advisable and complete right of ingress and egress to and from any portion of said property that the said parties of the second part , their assigns, may conduct mining operations.

(f) The right of first refusal of any purchase price set upon the lands herein leased by the paries of the first part.

IN TESTIMONY WHEREOF, the said parties hereto have set their respective hands and seals, the day and year first above set out.

Carr Bryson (SEAL)

Frances Bryson (SEAL)
Parties of the first part

W. A. Myers (SEAL)

F. S. Myers (SEAL)

Paul S. Meeker (SEAL)

E. B. Duvall (SEAL)
Parties of the second part

NORTH CAROLINA
MACON COUNTY

I, Verlon Swofford, Notary Public, in the above County and State, hereby certify that Carr Bryson and wife Frances Bryson personally appeared before me this date and acknowledged the due execution of the foregoing instrument for the purposes therein expressed.

WITNESS my hand and seal this the 30 day of April, 1954.

My Commission Expires November 2nd, 1955

Verlon Swofford

NORTH CAROLINA
MACON COUNTY

I, Sam J Murray, Justice of Peace in the above County and state, hereby certify that W H Myers F S Myers and E B Dowell personally appeared before me this date and acknowledged the due execution of the foregoing instrument for the purposes therein expressed.

WITNESS my hand and seal this the 1 day of May, 1954.

Sam J Murray
Justic of Peace

NORTH CAROLINA
Buncombe COUNTY

I, Bert Stevens, Notary Public in the above County and State, hereby certify that Paul S Mucken personally appeared before me this date and acknowledged the due execution of the foregoing instrument for the purposes therein expressed.

WITNESS my hand and seal this the 3rd day of May, 1954.

Bert Stevens
Notary Public

My com. ex. Jan. 13. 1956

NORTH CAROLINA
MACON COUNTY

THIS LEASE, made and entered into this the 30th day of April, 1954, by and between CARR BRYSON and wife FRANCES BRYSON, parties of the first part, and W. A. MYERS, F. S. MYERS, PAUL MEEKER, and E. B. DUVALL, parties of the second part, of the above County and State;

W I T N E S S E T H :

That subject to the terms and conditions hereinafter set forth the said parties of the first part have let and leased unto the said parties of the second part and their assigns the exclusive right and privilege to mine, dig and remove all minerals now in, under or upon a certain tract or parcel of land lying and being in Macon County, North Carolina, and more particularly described as follows:

> Being on Cowee Creek, ½ mile east of Cowee High School, being four acres more orless, owned by Carr Bryson, and lying southwest of his house 200 yards, more or less, to the South of the Cowee Road.

THE TERMS AND CONDITIONS OF THIS LEASE ARE AS FOLLOWS:

1. Unless sooner terminated as herein provided, this lease shall exist and continue for a period of TEN YEARS, with the further right to renew for an additional like period .

2. As rental or royalty, the parties of the second part or their assigns shall pay to the parties of the first part or their legal representative a sum equal to twelve and one-half per cent (12½%) of all the sheet or patter mica, One Dollar and Fifty Cents ($1.50) per ton for scrap mica, and fifty cents ($.50) per ton for all feldspar. In the event the parties of the second part or their assigns shall in the course of conducting mining operations upon said property, encounter any other metals or minerals not specifically set forth herein in merchantable quantities, said parties of the second part or their assigns shall recover the same, use their best efforts to obtain a market therefor and pay the parties of the first part a royalty equal to that

prevailing in the community for metals or minerals of like character.

3. That all royalties shall be paid between the first and tenth of each calendar month following production, sale and receipt of the sale price thereof.

4. Parties of the second ~~first~~ part or their assigns shall keep a correct and itemized record of all operations upon the premises, including transactions relating to the sale of minerals from the premises, said records to be open to the inspection of the parties of the first part at any time upon reasonable request.

5. The parties of the second part will commence operations upon the premises within ninety (90) days from the date of this lease, and shall not cease operations at any time for a period exceeding ninety (90) working days; failure to comply with these provisions shall cause the lease to become null and void without further action on the part of parties of the first part.

So long as this lease remains in force and effect the parties of the second part or their assigns in connection therewith shall have the following rights and privileges:

(a) The right to use the surface of said lands to the full extent that such use is reasonable, convenient or necessary in mining and removing the minerals from said lands and to use any portion of said surface for the purpose of dumping mine refuse and tailings as may be reasonable, necessary or convenient. In this connection, however, the parties of the second part agree that no unnecessary damage shall be done to the property in the process of conducting mining operations thereon.

(b) The right to construct and place upon said lands buildings and machinery and to remove the same.

(c) The right to cut and use upon said lands for the purposes herein set out any standing timber thereon at the time of such use.

(d) The right to use any water upon said property as may be necessary in the course of said operations.

(e) The right to construct and maintain roads in such locations as the parties of the second part may deem advisable and complete right of ingress and egress to and from any portion of said property that the said parties of the second part , their assigns, may conduct mining operations.

(f) The right of first refusal of any purchase price set upon the lands herein leased by the paries of the first part.

IN TESTIMONY WHEREOF, the said parties hereto have set their respective hands and seals, the day and year first above set out.

Carr Bryson (SEAL)

Frances Bryson (SEAL)
Parties of the first part

W. A. Myers (SEAL)

F. S. Myers (SEAL)

Paul S. Meeker (SEAL)

E. B. Duvall (SEAL)
Parties of the second part

NORTH CAROLINA
MACON COUNTY

I, Urlow Swafford Notary Public, in the above County and State, hereby certify that Carr Bryson & wife Frances Bryson personally appeared before me this date and acknowledged the due execution of the foregoing instrument for the purposes therein expressed.

WITNESS my hand and seal this the 30 day of April, 1954.

Urlow Swafford

My Commission Expires November 2nd, 1955

NORTH CAROLINA
MACON COUNTY

I, Sam J Murray, J P in the above County and state, hereby certify that W A Myers J S Myers and E B Rudwell personally appeared before me this date and acknowledged the due execution of the foregoing instrument for the purposes therein expressed.

WITNESS my hand and seal this the 1 day of May, 1954.

Sam J Murray
J P

NORTH CAROLINA
Buncombe COUNTY

I, Bert James, Notary Public in the above County and State, hereby certify that Paul D. Meyer personally appeared before me this date and acknowledged the due execution of the foregoing instrument for the purposes therein expressed.

WITNESS my hand and seal this the 3rd day of May, 1954.

Bert James
Notary Public

My Com. ex Jan. 13. 1956

UNITED STATES
DEPARTMENT OF THE INTERIOR
DEFENSE MINERALS EXPLORATION ADMINISTRATION
WASHINGTON 25, D. C.
ROOM 13, POST OFFICE BLDG.
KNOXVILLE 2, TENN.

June 14, 1954

Memorandum

To: Operating Committee, DMEA - Washington

From: Acting Executive Officer, DMEA - Region VII

Subject: Docket No. DMEA-3285, (mica). Paul S. Meeker, et al. Bryson No. 2 Mine. Macon County, North Carolina

Reference is made to your letter of June 7 regarding the breakdown of costs on the subject examination. It is not felt that $50 per foot for shaft sinking and $35/ft. for drifting is excessive. See our letter of June 11, 1954 on DMEA-3244, Alex Teague, (Old Denson Mine) Pickens County, Georgia; and letter of June 14, on DMEA-3260, John Phillips, et al (W. A. McKinney Mine) Yancey County, North Carolina.

Wm. A. Beck

Wm. A. Beck

UNITED STATES
DEPARTMENT OF THE INTERIOR
DEFENSE MINERALS EXPLORATION ADMINISTRATION
ROOM 13, POST OFFICE BLDG.
WASHINGTON 25, D.C.
KNOXVILLE 2, TENN.

May 12, 1954

Memorandum

To: Operating Committee, D M E A- Washington

From: Field Team, DMEA - Region 7

Subject: Field Examination Report on DMEA-3285 (Mica) Bryson #2 Mine, Macon County, N. C. Duvall, Myers, Myers & Meeker, Applicants

Enclosed are four copies of the subject examination report, with six extra copies of the map, and three copies of the new lease.

We agree with the proposal to deepen the present shaft on the pegmatite and to drift from the bottom. The present shaft is vertical, and entirely in the pegmatite. If the pegmatite should have a uniform dip and thickness, the bottom of the proposed 50-foot shaft would be 8 feet from the footwall, and a short crosscut would be required. Because of the improbability of such uniformity, and the awkwardness of an angle in the shaft, we agree that the shaft should be vertical.

Therefore, we recommend approval of a contract, with the following unit cost items:

Shaft, 38 ft. @ $50/ft.	$1,900.00
Drift and/or crosscut, 80 ft. @ $35/ft.	2,800.00
Total.....	$4,700.00

Robert A. Laurence

Robert A. Laurence, Executive Officer
DMEA Field Team, Region VII

W A Beck

Wm. A. Beck, for V. J. Lynch
U. S. Bureau of Mines

Reviewed by
DMEA OPERATING COMMITTEE
5-21-54
(date)

UNITED STATES
DEPARTMENT OF THE INTERIOR

gdl
6/3/54

DEFENSE MINERALS EXPLORATION ADMINISTRATION

REPORT OF EXAMINATION BY FIELD TEAM, REGION VII

ON

DMEA-3285, BRYSON NO. 2 MINE (mica)
Macon County, N. C.

By

Kefton Teague, and Dewey H. Amos, Geologists
U. S. Geological Survey
and
Lawrence E. Shirley, Mining Engineer
U. S. Bureau of Mines

May 10, 1954

Reviewed by
DMEA OPERATING COMMITTEE
5-21-54
(date)

FIELD EXAMINATION REPORT
On

DMEA-3285, BRYSON NO.2, MINE (mica)

Applicants: E. B. Duvall, F. S. Myers, W. A. Myers, and Paul S. Meeker.
c/o Paul S. Meeker, R#3, Asheville, North Carolina

Two pegmatites are exposed on this property (see map). The northern pegmatite offers little possibility for the production of strategic mica. Limited work on the south pegmatite has revealed a zoned pegmatite which contains mica of strategic grade. The examiners believe that the possibilities for the discovery of a worthwhile deposit of strategic mica in the south pegmatite are good. Exploration assistance is recommended on it.

The deposit was examined on April 10, 1954. All of the applicants accompanied the examiners on the inspection which required two hours.

The Bryson No. 2 Mine is on the south side of the Cowee Creek Road about on-half mile east of West Mill Post Office, 5.6 airline miles N. 14° W. of Franklin, Macon County, North Carolina. Access is excellent at all times.

Only one of the applicants, Mr. Duvall, has mica mining experience. However, he will be in charge of the proposed project and appears competent to conduct the operation.

Copies of a new lease on the deposit are enclosed. Area covered by the lease is adequate for the proposed project.

The applicants have recently conducted a limited amount of exploration on both pegmatites. This has consisted of cutting the open cut, driving the short drift, and sinking the 12-foot shaft shown on the attached map. A tool-mica house and a single phase, 220 volt electric line are on the property. Workings consist of a crosscutting cut about 200 feet long, 40 feet wide, and 10-30 feet deep. From this cut a short drift has been driven on the north pegmatite and a 12-foot, 5' x 7' timbered shaft has been sunk on the south pegmatite.

Two parallel pegmatites occur on this property. They trend from N. 80° W. to E-W., dipping from 30° to 72° S. Both are zoned, consisting of a quartz core flanked on both sides by feldspathic pegmatite. The feldspathic portions are composed of perthite, plagioclase, scattered quartz, muscovite, and biotite. Most of the mica from the north pegmatite is of poor quality; thus, exploration should not be considered on it.

The south pegmatite trends N. 80° W., dips 72° SW., and is enclosed conformably by biotite garnet gneiss which contains many pods and stringers of pegmatite. This sill-like intrusion is 8.5 feet thick, with a quartz core 4 feet thick. Mica occurs in the wall zone on both the hanging and foot wall sides of the core and adjacent to the core. The wall zone mica is of better quality, than that which occurs adjacent to the core; although the sizes are smaller. The mica is ruby-colored, hard, clear, and splits well. The wall zone mica is all flat, but that which occurs adjacent to the core contains some "A". Sizes up to 5 inches across were observed at the time of the examination.

This deposit has been recently opened. There is no evidence of previous work. A few sales to the Spruce Pine Mica Depot have been made recently from the north pegmatite. These sales averaged about $11.00 per pound.

Necessary equipment, supplies, and labor are available locally.

The applicants work proposal is sound and the examiners are in agreement with the extent of work proposed. It is recommended that the 12-foot shaft be deepened 30 feet to 50 feet, and 80 feet of drift be driven on the pegmatite. A water problem exists at this place, requiring adequate pumping facilities. The shaft and probably the levels will require timber.

Estimated costs are as follows:

Sink 38 feet of 5' x 7', 2-compartment, timbered shaft (20 shifts).

		Per ft
Labor and Supervision:		
2 Laborers @ $1.00/hr.	$320.00	
1 Hoistman @ $1.25/hr.	200.00	18.95
1 Driller-foreman @ $1.25/hr.	200.00	
	720.00	
Operating Materials & Supplies:		
Timber (3000 b.f.) @ $70/M.b.f.	210.00	5.53
Explosives	75.00	1.97
Gas & Oil	100.00	2.63
Drill steel	50.00	1.32
Small tools & Supplies	50.00	1.32
Operating Equipment:		
Compressor, pump and hammer-rental @ $240/Mo.	240.00	7.63
Hoist rental @ $50/Mo.	50.00	

Miscellaneous			
Insurance, Social Sec., Repairs, etc.	$250.00	6.58	
Contingencies	155.00	4.08	$1,900.00
Drive 80 feet of 5' x7' drift on pegmatite (32 shifts)		50.00	
Labor & Supervision			
2 Laborers @ $1/hr	512.00		
1 Hoistman @ $1.25/hr	320.00	1152.00	14.40
1 Driller-foreman @ $1.25/hr.	320.00		
Operating Materials & Supplies:			
Timber, 3000 b.f. @ $70/M. b.f.	210.00	2.62	
Explosives	150.00	1.87	
Gas & Oil	225.00	2.81	
Drill steel	100.00	1.25	
Small tools & supplies	75.00	.94	
Operating Equipment:			
Compressor, pump and drill, rental @ $240/Mo.	384.00	4.80	
Hoist- rental @ $50/Mo.	80.00	1.00	
Miscellaneous:			
Insurance, Soc. Sec., repairs, etc.	250.00	3.12	
Contingencies	174.00	2.17	$2,800.00

Total estimated cost of project..... $4,700.00

May 10, 1954.

K. H. Teague and D. H. Amos, Geologists
U. S. Geological Survey

L. E. Shirley, Mining Engineer
U. S. Bureau of Mines

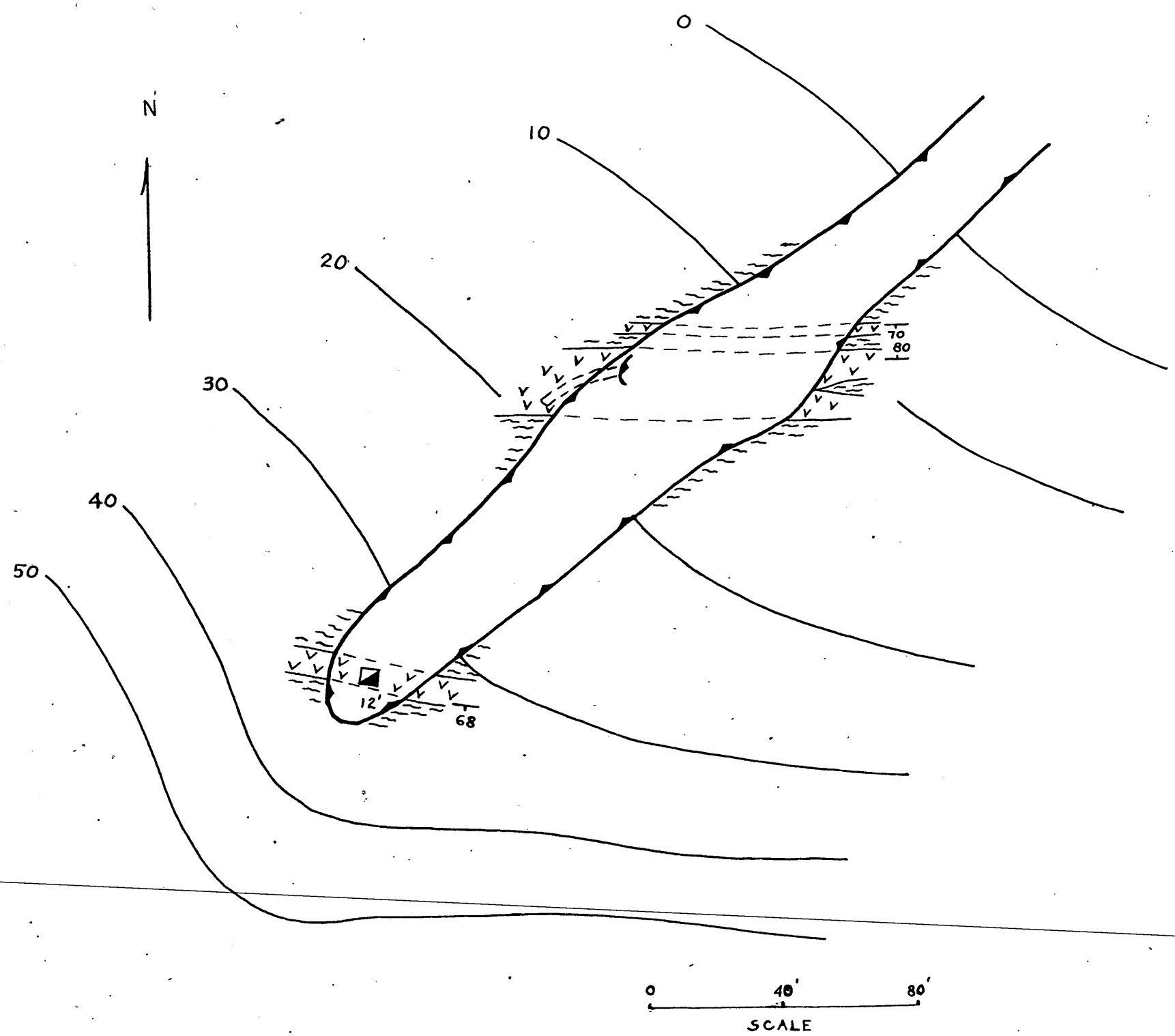

SKETCH OF
BRYSON #2 MINE
MACON CO., N.C.

DMEA-3285 (mica)

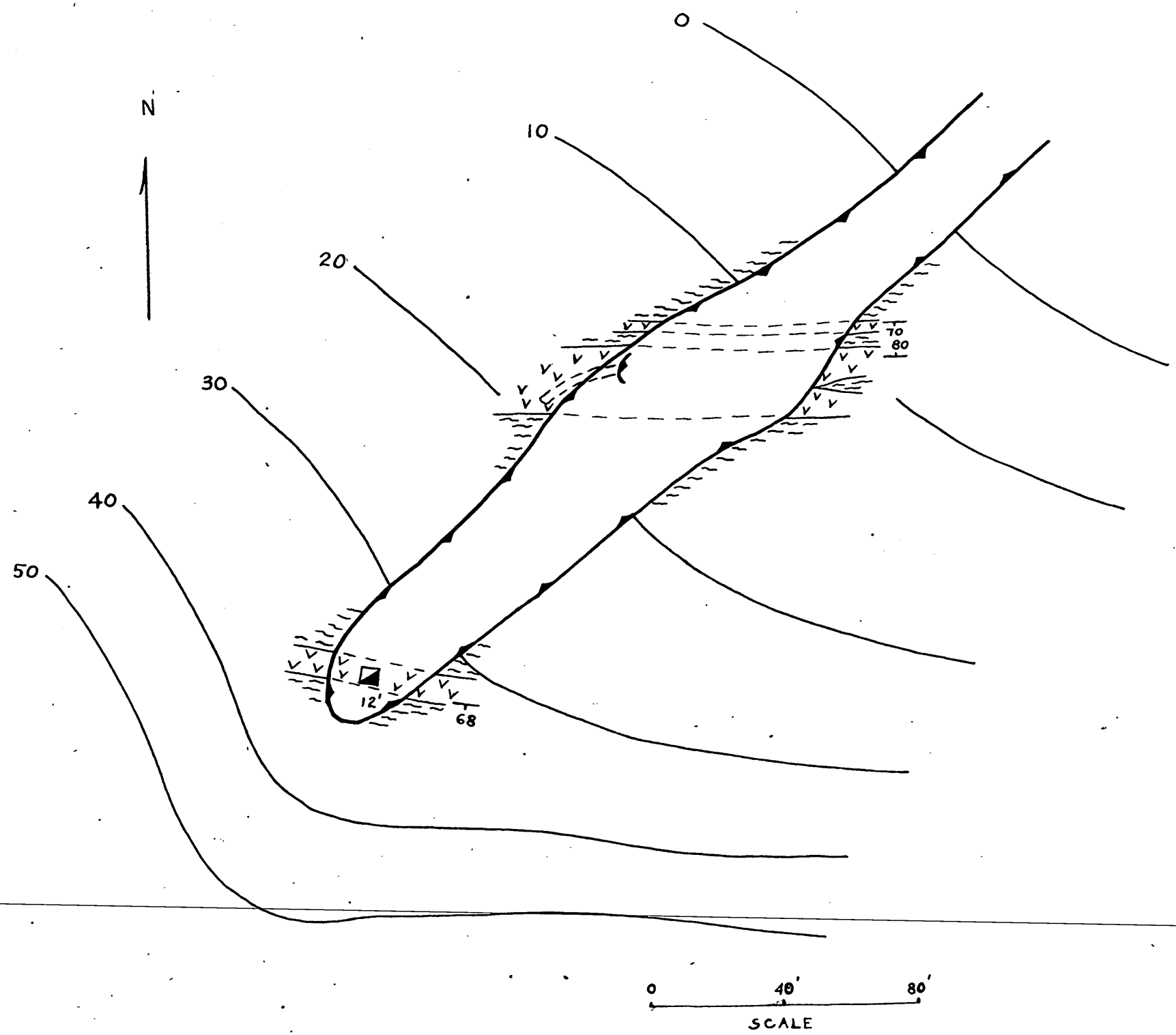

SKETCH OF
BRYSON #2 MINE
MACON CO., N.C.

DMEA-3285 (mica)

May 26, 1954

Mr. Lawrence G. Houk, Chief
Nonmetallic Minterals Division
Defende Minerals Administration
Washington 25, D. C.

Dear Mr. Houk:

Re: Docket No. DMEA-3285 - Mica
Paul S. Meeker, et al.
Bryson Mine # 2
Macon County, North Carolina

Your letter of May 20, 1954, requesting additional information on the above application has been received and noted.

Following your request, the legal description of the leased land has been determined, and is hereto attached. Also attached is a sketch of the premises, as no map is available at this date.

We hope the enclosures are satisfactory.

Yours very truly,

Paul S. Meeker
CBF

Paul S. Meeker
Route # 3
Asheville, N. C.

Re: Docket No. DMEA-3285- Mica
Paul S. Meeker, et al.
Bryson # 2 Mine
Macon County, N. C.

Legal Description of Leased Land

BEGINNING at an iron stake located at the junction of a branch (small, un-named) with the Cowee Road, said junction being located approximately 150 feet Northwest from Carr Bryson's Homeplace; runs in a Southwesterly direction along the South margin of said road 45 poles to a stake located at said edge of road; thence South 0 degrees W 36 poles up a slope to a stake; thence Due East 40 poles to a stake; thence North 0 degrees East 55 poles to the BEGINNING Corner; containing 6 acres, be the same more or less.

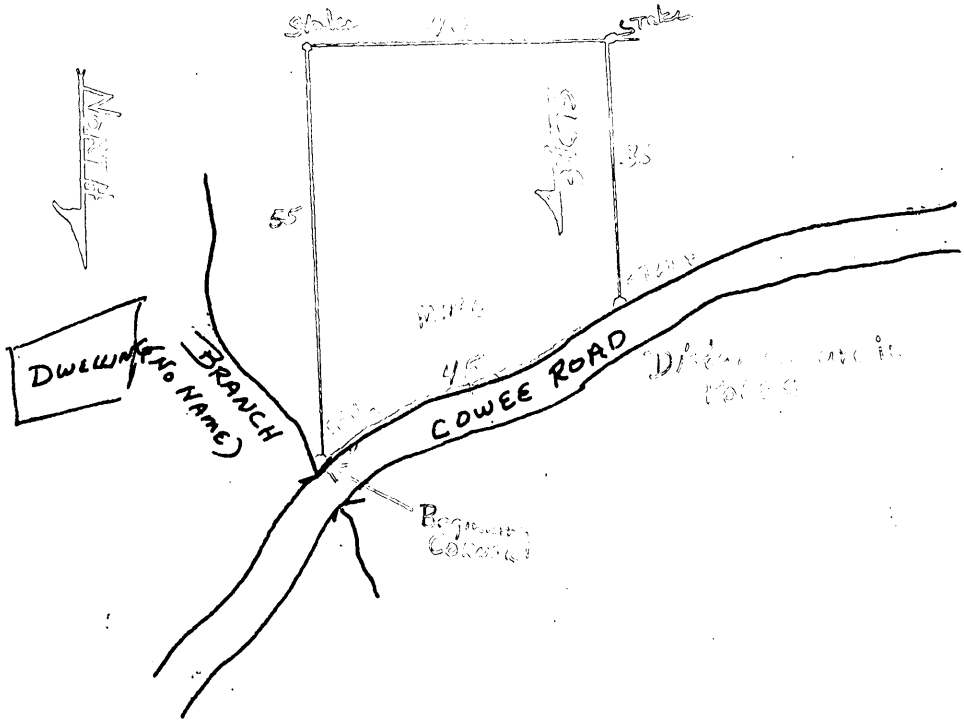
Stake
Stake
55
35
DWELLING
BRANCH
(NO NAME)
COWEE ROAD

FILE COPY
Surname:
Anderson
Houk
Whitenberg

UNITED STATES
DEPARTMENT OF THE INTERIOR
DEFENSE MINERALS EXPLORATION ADMINISTRATION
WASHINGTON 25, D. C. 600

Mr. Paul S. Meeker
Route 3
Asheville, North Carolina

MAY 2 0 1954

Re: Docket No. DMEA-3285 - Mica
Paul S. Meeker, et al.
Bryson #2 Mine
Macon County, North Carolina

Dear Mr. Meeker:

Receipt is acknowledged of copies of your recently executed lease on the subject property for a period of ten years.

The lease does not contain an adequate legal description of the land. Please note Article 3 (a) of MF-103, a blank copy of which is enclosed. The required legal description of your land should state the bounding bearings and distances enclosing the area, and the total acreage. A property map, if available, would be helpful.

As soon as we receive the above land description, we will resume processing your application.

Sincerely yours,

SIGNED
Lawrence S. Houk, Chief
Nonmetallic Minerals Division

Enclosure

WCAnderson:gad 5/19/54
Copy to: Admr. R. File
Docket File
Field Team, Region VII
Mr. Dietrich, 3061
Mr. Larrabee, G-232 GSA Bldg.
Mr. Houk

File Copy
Surname:
Anderson
Selfridge

UNITED STATES
DEPARTMENT OF THE INTERIOR
DEFENSE MINERALS EXPLORATION ADMINISTRATION
WASHINGTON 25, D. C. 600

APR 9 1954

Mr. Robert A. Laurence
Executive Officer, DMEA
Field Team, Region VII
Room 13, Post Office Bldg.
Knoxville 2, Tennessee

Subject: Docket No. DMEA-3285 - Mica
Paul S. Meeker, et al.
Bryson #2 Mine
Macon County, North Carolina

Dear Mr. Laurence:

Please review the subject application and arrange for a field examination if you deem it necessary.

Copies of memoranda from the Geological Survey, dated March 24, 1954, and from the Bureau of Mines, dated March 30, 1954, are enclosed for your information.

Sincerely yours,

George C. Selfridge

Chairman, Operating Committee (GCS)

Approved:

J. H. Hedges (JHH)
Member, Bureau of Mines

D. M. Larrabee (DML)
Member, Geological Survey

Enclosures 4

WCAnderson:gad 4/7/54
Copy to: Admr. R. File
Docket File
Operating Committee
Mr. Dietrich, 3061
Mr. Larrabee, G-232 GSA Bldg.
Mr. Houk

P.S. The lessee is not a partner. Duration of lease remaining is at most 15 months. If contract is recommended, a new lease should be made out to the partnership for a longer term, preferably for 10 years.

R.C.S.

File Copy
Surname:
Anderson
Hedges
Fairchild
Gettridge
Bjorneby

UNITED STATES
DEPARTMENT OF THE INTERIOR
DEFENSE MINERALS EXPLORATION ADMINISTRATION
WASHINGTON 25, D. C. 600

APR 9 1954

Mr. Paul S. Meeker, et al.
Route 3
Asheville, North Carolina

Re: Docket No. DMEA-3265 - Mica
Bryson #2 Mine
Macon County, North Carolina

Dear Mr. Meeker:

Your application for assistance in exploring the subject property has been reviewed by the Nonmetallic Minerals Division of the Defense Minerals Exploration Administration and has been referred to Mr. Robert A. Lawrence, Executive Officer, DMEA Field Team, Region VII, Room 13, Post Office Building, Knoxville 2, Tennessee, for further consideration and possibly a field examination.

The Regional Office will contact you at an early date if an examination is to be made. Any assistance that you may give the members of the field team during the examination will be appreciated.

Sincerely yours,

C. O. Mittendorf (for)

Administrator

WCAnderson:gad 4/7/54
Copy to: Admr. R. File
Docket File
Field Team, Region VII
Operating Committee
Mr. Dietrich, 3061
Mr. Larrabee, G-232 GSA Bldg.
Mr. Houk

R.C.J.

UNITED STATES
DEPARTMENT OF THE INTERIOR
BUREAU OF MINES
WASHINGTON 25, D. C.

DEPARTMENT OF THE INTERIOR
Defense Minerals Administration
RECEIVED
MAR 30 1954

March 30, 1954

Memorandum

To: Nonmetallic Minerals Division
Defense Minerals Exploration Administration

From: Chief, Ceramic and Fertilizer Materials Branch

Subject: DMEA-3285

Applicant: Duvall, Meyers, Meyers and Meeker

Name and Location of Property: Bryson #2
Macon County, North Carolina

Application Rec'd. by Ceramic & Fert. Mats. Branch: March 23, 1954

Comments:

1. Mica from this mine has been purchased by the Government Depot, Spruce Pine.

2. The mine is located in a productive area.

3. Estimated unit costs for shaft and drift appear to be about $5 higher than is usual in North Carolina.

4. Total costs are estimated to be $5,700.

Recommendation:

It is suggested the field team visit this mine to ascertain if an exploration program is justified.

W. F. Dietrich

W. F. Dietrich

IN REPLY REFER TO:

G-MD-CNM

UNITED STATES
DEPARTMENT OF THE INTERIOR
GEOLOGICAL SURVEY
WASHINGTON 25, D. C.

DEPARTMENT OF
Defense Minerals
RECEIVED
MAR 25 1954

March 24, 1954

Memorandum

REVIEW OF APPLICATION DMEA-3285 (mica)

To: L. G. Houk, Defense Minerals Exploration Administration
From: D. M. Larrabee, U. S. Geological Survey
Applicant's name and address: E. B. Duvall, Rte 3, Franklin, N. C. (et al)
Name of property: Bryson #2 mine
Location of property: On Cowee Creek, Macon Co., 7 mi. N. of Franklin, N.C.
Summary of applicant's proposed: 50' shaft
80' drift

Sources of information on applicant's property: None because of faulty (?) location.

Comments:
1. Cost breakdown inadequate.
2. Plan of attack inadequate.
3. Inadequate location, so can't check our records.

ACTION RECOMMENDED: Refer to Field Team for examination, if necessary.

D M Larrabee

D. M. Larrabee

UNITED STATES
DEPARTMENT OF THE INTERIOR
DEFENSE MINERALS EXPLORATION ADMINISTRATION
WASHINGTON 25, D. C.

March 22, 1954
Subject: DMEA-3285
Re: Exploration Assistance
Bryson # 2

Mr. Paul S. Meeker, et al.
Route 3
Asheville, N. C.

Dear Sirs:

The receipt of your application dated March 16, 1954 for exploration assistance under the Defense Production Act of 1950, as amended, is hereby acknowledged.

Your application has been assigned Docket Number DMEA-3285 and referred to the Non-Metallic Minerals Division.

Kindly refer to DMEA-3285 in any future correspondence relating to your application.

Sincerely yours,

Robert E. Adams
Chief, Operation's Control
and Statistics Division

UNITED STATES
DEPARTMENT OF THE INTERIOR
DEFENSE MINERALS EXPLORATION ADMINISTRATION
WASHINGTON 25, D. C.

March 22, 1954

Memorandum

To: Executive Officer, DMEA Field Team, Region VII

From: Chief, Operation's Control and Statistics Division

Subject: Assignment of Docket Number

There is listed below the assigned docket number to an application recently received from Region VII.

DMEA - 3285 Paul S. Meeker, et al.

Robert E. Adams,
Chief, Operation's Control
and Statistics Division

UNITED STATES
DEPARTMENT OF THE INTERIOR
DEFENSE MINERALS EXPLORATION ADMINISTRATION
ROOM 13, POST OFFICE BLDG.
KNOXVILLE 2, TENN.

March 19, 1954

Memorandum

To: Operating Committee, DMEA - Washington

From: Executive Officer, DMEA - Region VII - Knoxville, Tenn.

Subject: Application from Duvall, Meyers, Meyers & Meeker.
Bryson No. 2 Mine, Macon County, N. C. (mica)

Enclosed are three copies of the subject application, received today from the applicant. The fourth copy is being kept here for our files. The applicant has been requested to furnish a breakdown of costs supporting his estimates in item 6b.

It appears that the applicant is already operating an open-cut mine on this 4-acre tract, and wishes to explore one of two other pegmatites on the same tract. I assume that the statement "now determined" under item 4c means "not determined."

Robert A. Laurence

Robert A. Laurence

UNITED STATES
DEPARTMENT OF THE INTERIOR
DEFENSE MINERALS EXPLORATION ADMINISTRATION
WASHINGTON 25, D. C.

March 19, 1954

Memorandum

To: Operating Committee, DMEA - Washington

From: Executive Officer, DMEA - Region VII - Knoxville, Tenn.

Subject: Application from Duvall, Meyers, Meyers & Meekar.
Bryson No. 2 Mine, Macon County, N. C. (mica)

Enclosed are three copies of the subject application, received today from the applicant. The fourth copy is being kept here for our files. The applicant has been requested to furnish a breakdown of costs supporting his estimates in item 6b.

It appears that the applicant is already operating an open-cut mine on this 4-acre tract, and wishes to explore one of two other pegmatites on the same tract. I assume that the statement "now determined" under item 4e means "not determined."

Robert A. Laurence

RAL/mm

UNITED STATES
DEPARTMENT OF THE INTERIOR
DEFENSE MINERALS EXPLORATION ADMINISTRATION
WASHINGTON 25, D. C.

March 19, 1954

Mr. Paul S. Meeker
Route #3
Asheville, North Carolina

Re: Bryson No. 2 Mine (mica)
Application.

Dear Mr. Meeker:

Your application for aid in exploring for strategic mica at the Bryson No. 2 mine in Macon County, North Carolina has been received, and forwarded to our Washington office, in accordance with established procedure.

Your estimates of costs under item 6 b should be supported with a breakdown showing expected costs for labor, timber, equipment, supplies, etc. It will save time in processing your application if you will send me this information at your earliest convenience.

Very truly yours,

Robert A. Laurence

EXECUTIVE OFFICER
DMEA REGION VII

RAL/xm
cc:
Beck
Lynch
Opr. Com.
Files

MF-103
(Revised April 1952)

UNITED STATES DEPARTMENT OF THE INTERIOR
DEFENSE MINERALS EXPLORATION ADMINISTRATION

Form Approved.
Budget Bureau No. 42-R1035.2.

APPLICATION FOR AID IN AN EXPLORATION PROJECT, PURSUANT TO DMEA ORDER 1, UNDER THE DEFENSE PRODUCTION ACT OF 1950, AS AMENDED

Not to be filled in by applicant

Docket No. 3285
Metal or Mineral Mica
Date Received
Estimated Cost $5,700
Participation (Government %)

INSTRUCTIONS

1. *Name of applicant.*—(*a*) State here your full legal name, in the form in which you will wish to contract, and your mailing address: E. B. Duvall, Route 3, Franklin, N. C.; F. S. Meyers, Franklin, N. C.; W. A. Meyers, Route # 1, Horse Show, N. C.; Paul S. Meeker, Route 3, Deaverview Rd., Asheville, N. C., co-operators.
Mailing Address: Paul S. Meeker, Route 3, ~~Franklin~~ Asheville, N. C.

(*b*) If other than an individual, add to your name above whether a corporation, partnership, etc., and the name of the State in which incorporated or otherwise organized. Partnership

(*c*) If a corporation, add to above statement, titles, names and addresses of officers.

(*d*) If a partnership, add to the above statement the names and addresses of all partners.

2. *General.*—Read DMEA Order 1, "Government Aid in Defense Exploration Projects," before completing this application. Submit this application and all accompanying papers in quadruplicate (four copies), with your name and address on each sheet of the application and on all accompanying papers. Where sufficient space is not provided on the form for all required information, state it on an accompanying paper, with a reference in each case to the instruction to which it refers by number. Comply with all applicable instructions; or, if not applicable, so state. File the application with Defense Minerals Exploration Administration, Department of the Interior, Washington 25, D. C., or with the nearest field executive officer thereof.

3. *Applicant's property rights.*—(*a*) State the legal description of the land upon which you wish to explore, including all land which you possess or control that may be benefited by the exploration, and excluding any land or interest in land which is not to be included in the exploration project contract Being on Cowee Creek, ½ mile east of Cowee School, being four acres, more or less, owned by Carl Bryson and lying southwest of his house 200 yards, more or less, to the South of Cowee Road.

(*b*) State any mine name by which the property is known. Bryson # 2

(*c*) State your interest in the land, whether owner, lessee, purchaser under contract, or otherwise Lessees

(*d*) If you are not the owner, submit with this application a copy of the lease, contract, or other document under which you control the property.

(*e*) If you own the land, describe any liens or encumbrances on it

(*f*) If the land consists of unpatented claims, add to the description above, the book and page numbers for each recorded location notice.

4. *Physical description.*—(*a*) Describe in detail any mining or exploration operations which have been or now are being conducted upon the land, including existing mine workings and production facilities. State your interest, if any, in such operations. Also describe accessibility of mine workings for examination purposes.

(*b*) State past and current production, and ore reserves, if any, giving quantities and grades.

(*c*) Describe the geologic features of the property, including mineralization, type of deposit (vein, bedded, etc.), and your reasons for wishing to explore. Illustrate with maps or sketches. Send with your application (but not necessarily as a part of it) any geologic or engineering report, assay maps, or other technologic information you may have, indicating on each whether you require its return to you.

(*d*) State the facts with respect to the accessibility of the project: Access roads, distances to shipping, supply and residence points.

(*e*) State the availability of manpower, materials, supplies, equipment, water, and power.

5. *The exploration project.*—(*a*) State the mineral or minerals for which you wish to explore .....

(*b*) Describe fully the proposed work, including a map or sketch of the property showing a plan (and cross sections if needed) of any present mine workings, and the location of the proposed exploration work as related to such features as contacts, veins, ore-bearing beds, etc.

(*c*) The work will start within ...7..... days and be completed within ...12..... months from the date of an exploration project contract.

(*d*) State the operating experience and background of the applicant with relation to the ability to carry out such exploration project, and also that of the person or persons who will supervise the operations.

6. *Estimate of costs.*—Furnish a detailed estimate of the costs of the proposed work (you will have to use a separate sheet), under the following headings. Add the totals under all headings to give the estimated total cost of the project:

(*a*) *Independent contracts.*—(Note.—If the applicant does not intend to let any of the work to contractors, write "none" after this item. To the extent that the work is to be contracted, do not repeat the cost of the contract-work in subsequent items.) State the cost of any proposed independent contracts for the performance of all or any part of the work, expressed in terms of units of work (such as per foot of drilling, per foot of drifting, per hour of bulldozer operations, per cubic yard of material moved, etc.).

(*b*) *Labor, supervision, consultants.*—Include an itemized schedule of numbers, classes and rates of wages, salaries or fees for necessary labor, supervision and engineering and geological consultants.

(*c*) *Operating materials and supplies.*—Furnish an itemized list, including items of equipment costing less than $50 each, and power, water and fuel.

(*d*) *Operating equipment.*—Furnish an itemized list of any operating equipment to be rented, purchased, or which is owned and will be furnished by the Operator, with the estimated rental, purchase price, or suggested use-allowance based on present value, as the case may be.

(*e*) *Rehabilitation and repairs.*—Furnish a detailed list showing the cost of any necessary initial rehabilitation or repairs of existing buildings, installations, fixtures, and movable operating equipment, now owned by the Operator and which will be devoted to the exploration project.

(*f*) *New buildings, improvements, installations.*—Furnish a detailed list showing the cost of any necessary buildings, fixed improvements, or installations to be purchased, installed or constructed for the benefit of the exploration project.

(*g*) *Miscellaneous.*—Furnish a detailed list showing the cost of repairs to and maintenance of operating equipment (not including initial rehabilitation or repairs of the Operator's equipment), analytical work, accounting, workmen's compensation and employers' liability insurance, and payroll taxes.

(*h*) *Contingencies.*—Give an estimate of any necessary allowances for contingencies not included in the costs stated above.

NOTE.—No items of general overhead, corporate management, interest, taxes (other than payroll and sales taxes), or any other indirect costs, or work performed or costs incurred before the date of the contract, should be included in the estimate of costs.

7. (*a*) Are you prepared to furnish your share of the cost of the proposed project in accordance with the regulations on Government participation (Sec. 7, DMEA No. 1)?

(*b*) How do you propose to furnish your share of the costs?

☐ Money. ☒ Use of equipment owned by you some ☒ Other Labor

Explain in detail on acompanying paper.

CERTIFICATION

The undersigned, whether as an individual, corporate officer, partner, or otherwise, both in his own behalf and acting for the applicant, certifies that the information set forth in this form and accompanying papers is correct and complete, to the best of his knowledge and belief.

Dated ...March 16..., 1954.

E. B. Duvall
F. S. Meyers
W. A. Meyers
Paul S. Meeker, Operators

(Applicant)

By F. S. Meyers

Duly Authorized Agent

Title 18, U. S. Code (Crimes), Section 1001, makes it a criminal offense to make a willfully false statement or representation to any department or agency of the United States as to any matter within its jurisdiction.

U. S. GOVERNMENT PRINTING OFFICE 16—66551-1

GENERAL SERVICES ADMINISTRATION
Mica Purchase Depot - Spruce Pine, N. C.

WARRANTY, ACCEPTANCE AND INVOICE

DATE: 1-22-54
ACCEPTANCE NUMBER: C-747

ISSUED UNDER CERTIFICATE OF AUTHORIZATION NUMBER	LOT NUMBER	RECEIPT AND WEIGHT TICKET NUMBER
BPS-4-10954	SP-747	

WARRANTY

The undersigned, a participant in the Mica Program, warrants that the mica included in this lot of mica is of domestic origin, is not material owned previously by the Government, was not purchased from others prior to December 14, 1951, and is owned by the person or firm whose name appears below (herein referred to as "Seller").

NAME AND ADDRESS OF SELLER *(Type or print)*	SELLER OR PERSON AUTHORIZED TO SIGN THIS WARRANTY FOR SELLER
NAME: Paul Hooker	SIGNATURE:
STREET ADDRESS: Route 3	NAME *(Type or print)*: Arthur Moore
CITY, ZONE AND STATE: Asheville, N. C.	TITLE *(Type or print)*: Agent

EVALUATION AND SETTLEMENT DATA

PROGRAM A - BLOCK OR FILM MICA

QUALITY	HALF TRIM. POUNDS	HALF TRIM. PRICE PER LB.	HALF TRIM. AMOUNT	FULL TRIM POUNDS	FULL TRIM PRICE PER LB.	FULL TRIM AMOUNT
GOOD STAINED AND BETTER						
GRADES NO. 3 AND LARGER					$70.00	
GRADES NO. 4 AND 5				1.81	$40.00	72.40
GRADES NO. 5½ AND 6				20.48	$15.00	307.20
STAINED						
GRADES NO. 3 AND LARGER		$12.00			$18.00	
GRADES NO. 4 AND 5		$ 5.00		.31	$ 8.00	2.48
GRADES NO. 5½ AND 6		$ 3.00		7.86	$ 5.00	39.30
HEAVY STAINED						
GRADES NO. 3 AND LARGER		$ 8.00			$13.00	
GRADES NO. 4 AND 5		$ 4.00		2.56	$ 6.00	15.36
GRADES NO. 5½ AND 6		$ 2.00		8.27	$ 3.00	24.81
TOTALS						
LOT TOTALS				41.29		461.55

PROGRAM B - HAND-COBBED MICA

TOTALS					$ 0.30	

ACCEPTANCE

Subject to the terms and conditions of the Mica Regulation dated March 12, 1952 (17 F.R. 2279), establishing the Government's Purchase Programs for Domestic Mica, the Government accepts the number of pounds of mica (as hereinabove identified), delivered by the Seller to the Government for which payment in the total amount set forth hereinabove will be made by the Government.

GENERAL SERVICES ADMINISTRATION		
BY *(Type name)*: Carl Buchanan	SIGNATURE:	TITLE: Head Buyer

INVOICE

TO: General Services Administration, Region IV

FOR	
Mica delivered as indicated above	$ 461.55

I certify that the above bill is correct and just and that payment therefor has not been received.

SELLER *(Type name)*	DATE
Paul Hooker (Brycon Mine #2)	1-22-54
BY *(Signature)*:	NAME AND TITLE *(Type)*: Arthur Moore, Agent

Supplement to MF-103
March 16, 1954

4. (a)

Applicants are presently lessees of the above stated lease and in operation upon a portion of the four acres. Land is in a hollow, sloping to the east; quartz formations and walling beginning at surface level; walling dips south. Present operations by open cut around 30ft in depth. Signs of two additional veins on property other than open cut now being worked. Property adjoins an all-weather hard-surfaced road; open face cut is 50 yards from said road)(Cowee Road).

(b)
See enclosed record of sale to Government. Sale was made from mica produced at open cut.

(c)
Vein signs (imbedded in quartz) and running in correct formation leads applicants to believe that the sinking of a shaft at proper location (now determined) would uncover a vein of rich mica, of the highest grade ruby type.

(d)
Property adjoins all-weather hardsurface road (paved) called Cowee Road, In Northern Macon County. Located 7 miles from Franklin, N. C.

(e)
Manpower, materials, supplies, equipment, water, and power are available at site.

5. (a)
Wish to explore for sheet Mica.

(b)
Wish to sink a shaft 50 ft in depth, and drift from said shaft 80 ft (40 ft to either side). Location of shaft would be about 50 yards from road above stated, and would be about immediately above open cut set out above. Vein shows signs of dipping in direction of proposed work.

(d)
Combined experience of all four applicants totals 50 years in this type of enterprise.

6. (a) No independent contracts.
(b) Estimated cost of shaft to be $50.00 per foot. This includes hoist and all allied equipment used in shafting operations.
Estimated cost of drifting to be $40.00 per foot. This includes all material, equipment, etc. for driving drift, plus taking care of water encountered, if any.
Buildings needed already erected by applicants and on proper
This includes living quarters.
Power and equipment included in above estimates. Also maintenence co

4. (a)

Applicants are presently looking at the above listed land in operation upon a portion of the land area. Land is in a position suitable to the east; quarts formations and valuable equipment surface level; valuing dips south. Present operations by open pit around 30ft in depth. Signs of two additional veins in proximity other than open cut now being worked. Property adjoining on all another hard-surfaced road; open face pit 15 30 yards from main road (Cowee road).

(b)

See enclosed record of title to development. Information is not produced at open cut.

(c)

Vein signs (imbedded in quartz) and numbers of separate formation leads applicants to believe that the finding of a shaft to greater depth (now determined) would discover a vein of gold ores, of the highest grade ever type.

(d)

Property adjoins all-weather hard-surfaced road, (Cowee Road, In Northern Macon County. Located 7 miles from Franklin, N. C.

(e)

Equipment, materials, supplies, equipment, labor, and power are available on site.

5. (a)

Plan to explore for about 12ft.

(b)

Will go back a shaft 50 to 60 in depth, and drift from half a mile 15 (30 ft to either side). Production of shaft would be about 50 yards from road above stated, and would be about immediately above cut out above. Vein shows signs of thinning in direction of proposed work.

(c)

Combined experience of all four applicants totals 60 years in this type of enterprise.

6. (a) No independent contractors.

(b) Estimated cost of shaft to be $50.00 per foot. This includes hoist and all allied equipment used in actual operations.

Estimated cost of drifting to be $40.00 per foot. This includes all material, equipment, etc. for drifting only, also labor cost of water encountered, if any.

Buildings needed already erected by previous owner on property.

This includes living quarters.

Power and equipment included in above estimates. Also transportation costs

NORTH CAROLINA
MACON COUNTY

THIS INDENTURE made and entered into on the 13th day of July, 1953, by and between CARL BRYSON and wife, Frances Bryson, parties of the first part, and Wayne Duvall party of the second part.

W I T N E S S E T H:

That for and in consideration of the agreements hereinafter contained, the parties of the first part have hereby bargained, leased and granted and by these presents do bargain lease and grant to the party of the second part, for a period of 12 months from the date hereof, upon the terms and conditions hereinafter specified, the right to mine mica upon the following described properties situated in Cowee Township, Macon County, North Carolina, more particularly described as follows:

> Being on Cowee Creek, ½ mile east of Cowee High School, being four acres more or less, owned by Carl Bryson, and lying southwest of his house 200 yards, more or less, to the South of the Cowee Road.

The party of the second part have the right, for the aforesaid period of 12 months, with the privilege of renewal for another like term of years, to enter upon the said lands, and dig and mine mica and in connection therewith to exercise, in so far as necessary, the mining rights and privileges upon said properties.

The party of the second part shall pay to the parties of the first part a royalty of twelve and one-half (12½) per cent of the market price on all sheet mica mined thereon, and $1.50 per ton for scrip mica shall be due and payable on or before the fifteenth (15th) day of each month upon all mica sold during the preceeding month.

It is further understood and agreed by the parties hereto that the said parties of the first part shall be furnished a written statement of the amount of minerals mined and removed from said properties, and the party of the second part will at all times,

STATE OF NORTH CAROLINA

MACON COUNTY

I, Kate McGee, Clerk of the Superior Court, do hereby certify that CARL BRYSON, FRANCES BRYSON, and WAYNE DUVALL personally appeared before me and acknowledged the due execution of the annexed instrument. Let the instrument, with this certificate, be registered.

WITNESS my hand and official seal, this the 13th day of July, 1953.

Kate McGee
Clerk Superior Court

State of north Carolina,
Macon County,
December 7, 1953,

I, Wayne Duvall, with the permission of Mr. Carl Bryson, convey, or Transfer, all of my interest in the lease with Mr Carl Bryson, for the removal of Mica from the primeses of the mine located on Mr Carl Bryson's property, for the sum of Ten Dollars ($10.00) and other valuables received, to Mr. E. B. Duvall, F.S. Meyers, W. A. Meyers, and Paul S. Meeker

Effective this date, December 7, 1953.,

Wayne Duvall
WAYNE DUVALL

STATE OF NORTHCAROLINA
MACON COUNTY

I, Nina W. Slagle, Assistant Clerk of the Superior Court do hereby certify that ~~CARL BRYSON~~, ~~FRANCES BRYSON~~, ~~and~~ WAYNE DUVALL personally appeared before me and acknowledged the due execution of the annexed instrument. Let the instrument, with this certificate, be registered.

WITNESS my hand and official seal, this the 7th day of December, 1953.

Nina W. Slagle
Assistant Clerk Court

NORTH CAROLINA
MACON COUNTY

THIS INDENTURE made and entered into on the 13th day of July, 1953, by and between CARL BRYSON and wife, Frances Bryson, parties of the first part, and Wayne Duvall party of the second part.

W I T N E S S E T H:

That for and in consideration of the agreements hereinafter contained, the parties of the first part have hereby bargained, leased and granted and by these presents do bargain lease and grant to the party of the second part, for a period of 12 months from the date hereof, upon the terms and conditions hereinafter specified, the right to mine mica upon the following described properties situated in Cowee Township, Macon County, North Carolina, more particularly described as follows:

> Being on Cowee Creek, ½ mile east of Cowee High School, being four acres more or less, owned by Carl Bryson, and lying southwest of his house 200 yards, more or less, to the South of the Cowee Road.

The party of the second part have the right, for the aforesaid period of 12 months, with the privilege of renewal for another like term of years, to enter upon the said lands, and dig and mine mica and in connection therewith to exercise, in so far as necessary, the mining rights and privileges upon said properties.

The party of the second part shall pay to the parties of the first part a royalty of twelve and one-half (12½) per cent of the market price on all sheet mica mined thereon, and $1.50 per ton for scrip mica shall be due and payable on or before the fifteenth (15th) day of each month upon all mica sold during the preceeding month.

It is further understood and agreed by the parties hereto that the said parties of the first part shall be furnished a written statement of the amount of minerals mined and removed from said properties, and the party of the second part will at all times,

MF-203
(Revised July 1, 1953)

OWNER'S CONSENT TO LIEN

WHEREAS, the undersigned, as owner, co-owner, lessor, or seller has an interest in certain property in the State of North Carolina, County of Macon, described as follows:1/

Being on Cowee Creek, ½ mile east of Cowee School, being Four Acres more or less, owned by Carl Bryson, and lying southwest of his house 200 yards, more or less, to the South of Cowee Rd.

which is the subject of a proposed exploration project contract, hereinafter called the "contract", between the United States of America, hereinafter called the "Government", and

2/ E B DUVALL, Route 3, Franklin, N. C., F S MEYERS, Franklin, N. C., W. A. Meyers, Route 1, Horse Shoe, N. C. and PAUL S. MEEKER, Route 3, Deaverview Rd., Asheville, N. C.

hereinafter called the "Operators"; and

WHEREAS, under the provisions of said contract the Government is entitled to a percentage royalty on production (as set forth on the reverse side hereof) and to other rights and equities which do or may conflict with or be adverse to the rights of the undersigned:

NOW THEREFORE, the undersigned, in consideration of said contract and as an inducement to the Government to enter into same, undertakes and agrees as follows:

1. The Government's equity in and right to dismantle, sever, take possession of, and remove and dispose of facilities, buildings, fixtures, equipment, or other items as provided in the contract, or any amendment thereof, shall prevail over and be prior and superior to any conflicting or adverse rights of the undersigned, and the Government is authorized to enter upon the land for such purposes.

2. To secure the payment to the Government of the percentage royalty on production3/ provided for under the terms of said exploration project contract, or any amendment thereof, there is hereby granted to the Government a lien upon the land above referred to and upon any production of minerals therefrom, until said royalty is fully paid or ten years have elapsed from the date of the contract, whichever occurs first.

3. The undersigned shall commit no act nor assert any claim that may contravene or conflict with the lien, claim, or rights of the Government under the provisions of said contract. This agreement shall be binding upon the heirs, executors, administrators, successors, and assigns of the undersigned.

4. Changes and added provisions _____

Dated this _____ day of March, 1954.

Carl Bryson [Seal]

Mrs Frances Bryson [Seal]

_____ [Seal]

1/ Either (a) insert the legal description of the land, or (b) strike out the words "as follows" and insert "in a lease [or contract, deed, or other document] dated _____, and recorded in book _____ page _____ official records of said county." If (b) is used, the book and page of recordation cannot be dispensed with. If the space provided is insufficient, use an Annex, and refer to the Annex in the space.

2/ Insert the name of the Operator as it will appear in the exploration project contract.

3/ Mining or production from the land is not required, and in the absence of production there is no obligation to repay the Government.

Repayment by Operator.--a. Certification.--If at any time the Government considers that a discovery or development from which production may be made has resulted from the exploration work, the Government, at any time not later than six months after the Operator has rendered the final report and final account, may so certify in writing to the Operator. Such certification shall describe broadly or indicate the nature of the discovery or development.

b. Percentage royalty.--The Operator, or his successor in interest, shall pay to the Government a royalty on all minerals mined or produced from the land described in Article 2,--(1) regardless of any certification of discovery or development, from the date of the contract until the lapse of the time within which the Government may make such certification of discovery or development, or until the total net amount contributed by the Government, without interest, is fully repaid, whichever occurs first, unless the Government waives its right to a royalty; or (2) if the Government makes a certification of discovery or development, for a period of ten years (or other period fixed by the contract) from the date of the contract, or until the total net amount contributed by the Government, without interest, is fully repaid, whichever occurs first. Said royalty shall be a percentage of the net smelter returns, the net concentrator returns, or other net amounts realized from the sale or other disposition of any such production, in whatever form disposed of, including ore, concentrates, or metal, as follows:

(a) One and one-half (1½) percent of any such net amounts not in excess of eight dollars ($8.00) per ton.

(b) One and one-half (1½) percent of any such net amounts, plus one-half (½) percent of such net amounts for each additional full fifty cents ($0.50) by which such net amounts exceed eight dollars ($8.00) per ton, but not in excess of five (5) percent of such net amounts.

(For instance: the percentage royalty on a net amount of five dollars ($5.00) per ton, would be one and one-half (1½) percent; on a net amount of ten dollars ($10.00) per ton, three and one-half (3½) percent.)

c. Definitions.--As here used, "net smelter returns", "net concentrator returns", and "other net amounts realized from the sale or other disposition", mean gross revenue from sales; or if not sold, the market value of the material after it is mined in the form in which and the place where it is held. In the case of integrated operations in which the material is not disposed of as such, these terms mean what is or would be gross income from mining operations for percentage depletion purposes in income tax determination.

d. Lien for Payment.--To secure the payment of its percentage royalty, the Government shall have and is hereby granted a lien upon the land described in Article 2 and upon any production of minerals therefrom, until the royalty claim is extinguished by lapse of time or is fully paid.

e. Notice to Purchasers.--The Operator shall notify any purchaser of the production of the Government's royalty interest, and shall authorize and direct the purchaser to pay the royalty directly to the Government and to furnish the Government with copies of the settlement sheets; but failure or refusal by the purchaser to comply shall not relieve the Operator of liability to pay any royalty falling due.

f. No Obligation to Produce.--This article is not to be construed as imposing any obligation on the Operator or the Operator's successor in interest to engage in any mining or production operations.

Interior--Duplicating Section, Washington, D. C. 47318

MF-203
(Revised July 1, 1953)

OWNER'S CONSENT TO LIEN

WHEREAS, the undersigned, as owner, co-owner, lessor, or seller has an interest in certain property in the State of North Carolina, County of Macon described as follows:1/

Being on Cowee Creek, ½ mile east of Cowee School, being Four Acres more or less, owned by Carl Bryson, and lying southwest of his house 200 yards, more or less, to the South of Cowee Rd.

which is the subject of a proposed exploration project contract, hereinafter called the "contract", between the United States of America, hereinafter called the "Government", and

2/E B DUVALL, Route 3, Franklin, N. C., F S MEYERS, Franklin, N. C., W. A. Meyers, Route 1, Horse Shoe, N. C. and PAUL S. MEEKER, Route 3, Deaverview Rd., Asheville, N. C.

hereinafter called the "Operator"; and

WHEREAS, under the provisions of said contract the Government is entitled to a percentage royalty on production (as set forth on the reverse side hereof) and to other rights and equities which do or may conflict with or be adverse to the rights of the undersigned:

NOW THEREFORE, the undersigned, in consideration of said contract and as an inducement to the Government to enter into same, undertakes and agrees as follows:

1. The Government's equity in and right to dismantle, sever, take possession of, and remove and dispose of facilities, buildings, fixtures, equipment, or other items as provided in the contract, or any amendment thereof, shall prevail over and be prior and superior to any conflicting or adverse rights of the undersigned, and the Government is authorized to enter upon the land for such purposes.

2. To secure the payment to the Government of the percentage royalty on production3/ provided for under the terms of said exploration project contract, or any amendment thereof, there is hereby granted to the Government a lien upon the land above referred to and upon any production of minerals therefrom, until said royalty is fully paid or ten years have elapsed from the date of the contract, whichever occurs first.

3. The undersigned shall commit no act nor assert any claim that may contravene or conflict with the lien, claim, or rights of the Government under the provisions of said contract. This agreement shall be binding upon the heirs, executors, administrators, successors, and assigns of the undersigned.

4. Changes and added provisions _____

Dated this _____ day of March, 1954.

Carl Bryson [Seal]

Mrs Frances Bryson [Seal]

_____ [Seal]

1/ Either (a) insert the legal description of the land, or (b) strike out the words "as follows" and insert "in a lease [or contract, deed, or other document] dated _____, and recorded in book _____ page _____ official records of said county." If (b) is used, the book and page of recordation cannot be dispensed with. If the space provided is insufficient, use an Annex, and refer to the Annex in the space.

2/ Insert the name of the Operator as it will appear in the exploration project contract.

3/ Mining or production from the land is not required, and in the absence of production there is no obligation to repay the Government.

Repayment by Operator.--a. Certification.--If at any time the Government considers that a discovery or development from which production may be made has resulted from the exploration work, the Government, at any time not later than six months after the Operator has rendered the final report and final account, may so certify in writing to the Operator. Such certification shall describe broadly or indicate the nature of the discovery or development.

b. Percentage royalty.--The Operator, or his successor in interest, shall pay to the Government a royalty on all minerals mined or produced from the land described in Article 2,--(1) regardless of any certification of discovery or development, from the date of the contract until the lapse of the time within which the Government may make such certification of discovery or development, or until the total net amount contributed by the Government, without interest, is fully repaid, whichever occurs first, unless the Government waives its right to a royalty; or (2) if the Government makes a certification of discovery or development, for a period of ten years (or other period fixed by the contract) from the date of the contract, or until the total net amount contributed by the Government, without interest, is fully repaid, whichever occurs first. Said royalty shall be a percentage of the net smelter returns, the net concentrator returns, or other net amounts realized from the sale or other disposition of any such production, in whatever form disposed of, including ore, concentrates, or metal, as follows:

(a) One and one-half (1½) percent of any such net amounts not in excess of eight dollars ($8.00) per ton.

(b) One and one-half (1½) percent of any such net amounts, plus one-half (½) percent of such net amounts for each additional full fifty cents ($0.50) by which such net amounts exceed eight dollars ($8.00) per ton, but not in excess of five (5) percent of such net amounts.

(For instance: the percentage royalty on a net amount of five dollars ($5.00) per ton, would be one and one-half (1½) percent; on a net amount of ten dollars ($10.00) per ton, three and one-half (3½) percent.)

c. Definitions.--As here used, "net smelter returns", "net concentrator returns", and "other net amounts realized from the sale or other disposition", mean gross revenue from sales; or if not sold, the market value of the material after it is mined in the form in which and the place where it is held. In the case of integrated operations in which the material is not disposed of as such, these terms mean what is or would be gross income from mining operations for percentage depletion purposes in income tax determination.

d. Lien for Payment.--To secure the payment of its percentage royalty, the Government shall have and is hereby granted a lien upon the land described in Article 2 and upon any production of minerals therefrom, until the royalty claim is extinguished by lapse of time or is fully paid.

e. Notice to Purchasers.--The Operator shall notify any purchaser of the production of the Government's royalty interest, and shall authorize and direct the purchaser to pay the royalty directly to the Government and to furnish the Government with copies of the settlement sheets; but failure or refusal by the purchaser to comply shall not relieve the Operator of liability to pay any royalty falling due.

f. No Obligation to Produce.--This article is not to be construed as imposing any obligation on the Operator or the Operator's successor in interest to engage in any mining or production operations.

Interior—Duplicating Section, Washington, D. C. 47318

MF-203
(Revised July 1, 1953)

OWNER'S CONSENT TO LIEN

WHEREAS, the undersigned, as owner, co-owner, lessor, or seller has an interest in certain property in the State of North Carolina, County of Macon, described as follows:1/

Being on Cowee Creek, ½ mile east of Cowee School, being Four Acres more or less, owned by Carl Bryson, and lying southwest of his house 200 yards, more or less, to the South of Cowee Rd.

which is the subject of a proposed exploration project contract, hereinafter called the "contract", between the United States of America, hereinafter called the "Government", and

2/ E D DUVALL, Route 3, Franklin, N. C., F S MEYERS, Franklin, N. C., W. A. Meyers, Route 1, Horse Shoe, N. C. and PAUL S. MEYERS, Route 3, Deaverview Rd., Asheville, N. C.

hereinafter called the "Operator"; and

WHEREAS, under the provisions of said contract the Government is entitled to a percentage royalty on production (as set forth on the reverse side hereof) and to other rights and equities which do or may conflict with or be adverse to the rights of the undersigned:

NOW THEREFORE, the undersigned, in consideration of said contract and as an inducement to the Government to enter into same, undertakes and agrees as follows:

1. The Government's equity in and right to dismantle, sever, take possession of, and remove and dispose of facilities, buildings, fixtures, equipment, or other items as provided in the contract, or any amendment thereof, shall prevail over and be prior and superior to any conflicting or adverse rights of the undersigned, and the Government is authorized to enter upon the land for such purposes.

2. To secure the payment to the Government of the percentage royalty on production3/ provided for under the terms of said exploration project contract, or any amendment thereof, there is hereby granted to the Government a lien upon the land above referred to and upon any production of minerals therefrom, until said royalty is fully paid or ten years have elapsed from the date of the contract, whichever occurs first.

3. The undersigned shall commit no act nor assert any claim that may contravene or conflict with the lien, claim, or rights of the Government under the provisions of said contract. This agreement shall be binding upon the heirs, executors, administrators, successors, and assigns of the undersigned.

4. Changes and added provisions _____

Dated this _____ day of March, 1954.

Carl Bryson [Seal]

Mrs Frances Bryson [Seal]

_____ [Seal]

1/ Either (a) insert the legal description of the land, or (b) strike out the words "as follows" and insert "in a lease [or contract, deed, or other document] dated _____, and recorded in book _____ page _____ official records of said county." If (b) is used, the book and page of recordation cannot be dispensed with. If the space provided is insufficient, use an Annex, and refer to the Annex in the space.

2/ Insert the name of the Operator as it will appear in the exploration project contract.

3/ Mining or production from the land is not required, and in the absence of production there is no obligation to repay the Government.

Repayment by Operator.--a. Certification.--If at any time the Government considers that a discovery or development from which production may be made has resulted from the exploration work, the Government, at any time not later than six months after the Operator has rendered the final report and final account, may so certify in writing to the Operator. Such certification shall describe broadly or indicate the nature of the discovery or development.

b. Percentage royalty.--The Operator, or his successor in interest, shall pay to the Government a royalty on all minerals mined or produced from the land described in Article 2,--(1) regardless of any certification of discovery or development, from the date of the contract until the lapse of the time within which the Government may make such certification of discovery or development, or until the total net amount contributed by the Government, without interest, is fully repaid, whichever occurs first, unless the Government waives its right to a royalty; or (2) if the Government makes a certification of discovery or development, for a period of ten years (or other period fixed by the contract) from the date of the contract, or until the total net amount contributed by the Government, without interest, is fully repaid, whichever occurs first. Said royalty shall be a percentage of the net smelter returns, the net concentrator returns, or other net amounts realized from the sale or other disposition of any such production, in whatever form disposed of, including ore, concentrates, or metal, as follows:

(a) One and one-half (1½) percent of any such net amounts not in excess of eight dollars ($8.00) per ton.

(b) One and one-half (1½) percent of any such net amounts, plus one-half (½) percent of such net amounts for each additional full fifty cents ($0.50) by which such net amounts exceed eight dollars ($8.00) per ton, but not in excess of five (5) percent of such net amounts.

(For instance: the percentage royalty on a net amount of five dollars ($5.00) per ton, would be one and one-half (1½) percent; on a net amount of ten dollars ($10.00) per ton, three and one-half (3½) percent.)

c. Definitions.--As here used, "net smelter returns", "net concentrator returns", and "other net amounts realized from the sale or other disposition", mean gross revenue from sales; or if not sold, the market value of the material after it is mined in the form in which and the place where it is held. In the case of integrated operations in which the material is not disposed of as such, these terms mean what is or would be gross income from mining operations for percentage depletion purposes in income tax determination.

d. Lien for Payment.--To secure the payment of its percentage royalty, the Government shall have and is hereby granted a lien upon the land described in Article 2 and upon any production of minerals therefrom, until the royalty claim is extinguished by lapse of time or is fully paid.

e. Notice to Purchasers.--The Operator shall notify any purchaser of the production of the Government's royalty interest, and shall authorize and direct the purchaser to pay the royalty directly to the Government and to furnish the Government with copies of the settlement sheets; but failure or refusal by the purchaser to comply shall not relieve the Operator of liability to pay any royalty falling due.

f. No Obligation to Produce.--This article is not to be construed as imposing any obligation on the Operator or the Operator's successor in interest to engage in any mining or production operations.

Interior--Duplicating Section, Washington, D. C. 47318

MF-203
(Revised July 1, 1953)

OWNER'S CONSENT TO LIEN

WHEREAS, the undersigned, as owner, co-owner, lessor, or seller has an interest in certain property in the State of North Carolina, County of Mason, described as follows:1/

Being on Cowee Creek, ½ mile east of Cowee School, being Four Acres more or less, owned by Carl Bryson, and lying southwest of his house 200 yards, more or less, to the South of Cowee Rd.

which is the subject of a proposed exploration project contract, hereinafter called the "contract", between the United States of America, hereinafter called the "Government", and

2/ B D DAVAL, Route 3, Franklin, N. C., P S [illegible], Franklin, N. C., H. A. Meyers, Route 1, Horse Shoe, N. C. and PAUL S. [illegible], Route 3, Beaverview Rd., Asheville, N. C.

hereinafter called the "Operator"; and

WHEREAS, under the provisions of said contract the Government is entitled to a percentage royalty on production (as set forth on the reverse side hereof) and to other rights and equities which do or may conflict with or be adverse to the rights of the undersigned:

NOW THEREFORE, the undersigned, in consideration of said contract and as an inducement to the Government to enter into same, undertakes and agrees as follows:

1. The Government's equity in and right to dismantle, sever, take possession of, and remove and dispose of facilities, buildings, fixtures, equipment, or other items as provided in the contract, or any amendment thereof, shall prevail over and be prior and superior to any conflicting or adverse rights of the undersigned, and the Government is authorized to enter upon the land for such purposes.

2. To secure the payment to the Government of the percentage royalty on production3/ provided for under the terms of said exploration project contract, or any amendment thereof, there is hereby granted to the Government a lien upon the land above referred to and upon any production of minerals therefrom, until said royalty is fully paid or ten years have elapsed from the date of the contract, whichever occurs first.

3. The undersigned shall commit no act nor assert any claim that may contravene or conflict with the lien, claim, or rights of the Government under the provisions of said contract. This agreement shall be binding upon the heirs, executors, administrators, successors, and assigns of the undersigned.

4. Changes and added provisions _____

Dated this _____ day of March, 1954.

Carl Bryson [Seal]

Mrs Frances Bryson [Seal]

_____ [Seal]

1/ Either (a) insert the legal description of the land, or (b) strike out the words "as follows" and insert "in a lease [or contract, deed, or other document] dated _____, and recorded in book _____ page _____ official records of said county." If (b) is used, the book and page of recordation cannot be dispensed with. If the space provided is insufficient, use an Annex, and refer to the Annex in the space.

2/ Insert the name of the Operator as it will appear in the exploration project contract.

3/ Mining or production from the land is not required, and in the absence of production there is no obligation to repay the Government.

Repayment by Operator.--a. Certification.--If at any time the Government considers that a discovery or development from which production may be made has resulted from the exploration work, the Government, at any time not later than six months after the Operator has rendered the final report and final account, may so certify in writing to the Operator. Such certification shall describe broadly or indicate the nature of the discovery or development.

b. Percentage royalty.--The Operator, or his successor in interest, shall pay to the Government a royalty on all minerals mined or produced from the land described in Article 2,--(1) regardless of any certification of discovery or development, from the date of the contract until the lapse of the time within which the Government may make such certification of discovery or development, or until the total net amount contributed by the Government, without interest, is fully repaid, whichever occurs first, unless the Government waives its right to a royalty; or (2) if the Government makes a certification of discovery or development, for a period of ten years (or other period fixed by the contract) from the date of the contract, or until the total net amount contributed by the Government, without interest, is fully repaid, whichever occurs first. Said royalty shall be a percentage of the net smelter returns, the net concentrator returns, or other net amounts realized from the sale or other disposition of any such production, in whatever form disposed of, including ore, concentrates, or metal, as follows:

(a) One and one-half (1½) percent of any such net amounts not in excess of eight dollars ($8.00) per ton.

(b) One and one-half (1½) percent of any such net amounts, plus one-half (½) percent of such net amounts for each additional full fifty cents ($0.50) by which such net amounts exceed eight dollars ($8.00) per ton, but not in excess of five (5) percent of such net amounts.

(For instance: the percentage royalty on a net amount of five dollars ($5.00) per ton, would be one and one-half (1½) percent; on a net amount of ten dollars ($10.00) per ton, three and one-half (3½) percent.)

c. Definitions.--As here used, "net smelter returns", "net concentrator returns", and "other net amounts realized from the sale or other disposition", mean gross revenue from sales; or if not sold, the market value of the material after it is mined in the form in which and the place where it is held. In the case of integrated operations in which the material is not disposed of as such, these terms mean what is or would be gross income from mining operations for percentage depletion purposes in income tax determination.

d. Lien for Payment.--To secure the payment of its percentage royalty, the Government shall have and is hereby granted a lien upon the land described in Article 2 and upon any production of minerals therefrom, until the royalty claim is extinguished by lapse of time or is fully paid.

e. Notice to Purchasers.--The Operator shall notify any purchaser of the production of the Government's royalty interest, and shall authorize and direct the purchaser to pay the royalty directly to the Government and to furnish the Government with copies of the settlement sheets; but failure or refusal by the purchaser to comply shall not relieve the Operator of liability to pay any royalty falling due.

f. No Obligation to Produce.--This article is not to be construed as imposing any obligation on the Operator or the Operator's successor in interest to engage in any mining or production operations.

Interior—Duplicating Section, Washington, D. C. 47318

MF-203
(Revised July 1, 1953)

OWNER'S CONSENT TO LIEN

WHEREAS, the undersigned, as owner, co-owner, lessor, or seller has an interest in certain property in the State of North Carolina, County of Macon, described as follows:1/

Being on Cowee Creek, ½ mile east of Cowee School, being four acres more or less, owned by Carl Bryson, and lying southwest of the house 200 yards, more or less, to the South of Cowee Rd.

which is the subject of a proposed exploration project contract, hereinafter called the "contract", between the United States of America, hereinafter called the "Government", and

2/ D. D. Evans, Route 3, Franklin, N. C., R. S. Ellis, Franklin, N. C., M. A. Meyers, Route 1, Horse Shoe, N. C. and Paul D. Martin, Route 3, Reservation Rd., Asheville, N. C.

hereinafter called the "Operator"; and

WHEREAS, under the provisions of said contract the Government is entitled to a percentage royalty on production (as set forth on the reverse side hereof) and to other rights and equities which do or may conflict with or be adverse to the rights of the undersigned:

NOW THEREFORE, the undersigned, in consideration of said contract and as an inducement to the Government to enter into same, undertakes and agrees as follows:

1. The Government's equity in and right to dismantle, sever, take possession of, and remove and dispose of facilities, buildings, fixtures, equipment, or other items as provided in the contract, or any amendment thereof, shall prevail over and be prior and superior to any conflicting or adverse rights of the undersigned, and the Government is authorized to enter upon the land for such purposes.

2. To secure the payment to the Government of the percentage royalty on production3/ provided for under the terms of said exploration project contract, or any amendment thereof, there is hereby granted to the Government a lien upon the land above referred to and upon any production of minerals therefrom, until said royalty is fully paid or ten years have elapsed from the date of the contract, whichever occurs first.

3. The undersigned shall commit no act nor assert any claim that may contravene or conflict with the lien, claim, or rights of the Government under the provisions of said contract. This agreement shall be binding upon the heirs, executors, administrators, successors, and assigns of the undersigned.

4. Changes and added provisions _____

Dated this _____ day of March, 1954.

Carl Bryson [Seal]

Mrs Frances Bryson [Seal]

_____ [Seal]

1/ Either (a) insert the legal description of the land, or (b) strike out the words "as follows" and insert "in a lease [or contract, deed, or other document] dated _____, and recorded in book _____ page _____ official records of said county." If (b) is used, the book and page of recordation cannot be dispensed with. If the space provided is insufficient, use an Annex, and refer to the Annex in the space.

2/ Insert the name of the Operator as it will appear in the exploration project contract.

3/ Mining or production from the land is not required, and in the absence of production there is no obligation to repay the Government.

Repayment by Operator.--a. Certification.--If at any time the Government considers that a discovery or development from which production may be made has resulted from the exploration work, the Government, at any time not later than six months after the Operator has rendered the final report and final account, may so certify in writing to the Operator. Such certification shall describe broadly or indicate the nature of the discovery or development.

b. Percentage royalty.--The Operator, or his successor in interest, shall pay to the Government a royalty on all minerals mined or produced from the land described in Article 2,--(1) regardless of any certification of discovery or development, from the date of the contract until the lapse of the time within which the Government may make such certification of discovery or development, or until the total net amount contributed by the Government, without interest, is fully repaid, whichever occurs first, unless the Government waives its right to a royalty; or (2) if the Government makes a certification of discovery or development, for a period of ten years (or other period fixed by the contract) from the date of the contract, or until the total net amount contributed by the Government, without interest, is fully repaid, whichever occurs first. Said royalty shall be a percentage of the net smelter returns, the net concentrator returns, or other net amounts realized from the sale or other disposition of any such production, in whatever form disposed of, including ore, concentrates, or metal, as follows:

(a) One and one-half (1½) percent of any such net amounts not in excess of eight dollars ($8.00) per ton.

(b) One and one-half (1½) percent of any such net amounts, plus one-half (½) percent of such net amounts for each additional full fifty cents ($0.50) by which such net amounts exceed eight dollars ($8.00) per ton, but not in excess of five (5) percent of such net amounts.

(For instance: the percentage royalty on a net amount of five dollars ($5.00) per ton, would be one and one-half (1½) percent; on a net amount of ten dollars ($10.00) per ton, three and one-half (3½) percent.)

c. Definitions.--As here used, "net smelter returns", "net concentrator returns", and "other net amounts realized from the sale or other disposition", mean gross revenue from sales; or if not sold, the market value of the material after it is mined in the form in which and the place where it is held. In the case of integrated operations in which the material is not disposed of as such, these terms mean what is or would be gross income from mining operations for percentage depletion purposes in income tax determination.

d. Lien for Payment.--To secure the payment of its percentage royalty, the Government shall have and is hereby granted a lien upon the land described in Article 2 and upon any production of minerals therefrom, until the royalty claim is extinguished by lapse of time or is fully paid.

e. Notice to Purchasers.--The Operator shall notify any purchaser of the production of the Government's royalty interest, and shall authorize and direct the purchaser to pay the royalty directly to the Government and to furnish the Government with copies of the settlement sheets; but failure or refusal by the purchaser to comply shall not relieve the Operator of liability to pay any royalty falling due.

f. No Obligation to Produce.--This article is not to be construed as imposing any obligation on the Operator or the Operator's successor in interest to engage in any mining or production operations.

Interior—Duplicating Section, Washington, D. C. 47318

MF-203
(Revised July 1, 1953)

OWNER'S CONSENT TO LIEN

WHEREAS, the undersigned, as owner, co-owner, lessor, or seller has an interest in certain property in the State of North Carolina, County of Mason, described as follows:1/

Being on Cane Creek, 3 mile east of Cane School, being four acre more or less, owned by Carl Bryson, and lying southwest of the house 150 yards, more or less, on the South of Cane Co.

which is the subject of a proposed exploration project contract, hereinafter called the "contract", between the United States of America, hereinafter called the "Government", and

2/ R D Bryson, Route 3, Greenville, N. C., R D Bryson, Greenville, N. C., N. A. Rogers, Route 1, Snow Hill, N. C. and Dan A. Carroll, Route 3, Bethel Hill, Greenville, N. C.

hereinafter called the "Operator"; and

WHEREAS, under the provisions of said contract the Government is entitled to a percentage royalty on production (as set forth on the reverse side hereof) and to other rights and equities which do or may conflict with or be adverse to the rights of the undersigned:

NOW THEREFORE, the undersigned, in consideration of said contract and as an inducement to the Government to enter into same, undertakes and agrees as follows:

1. The Government's equity in and right to dismantle, sever, take possession of, and remove and dispose of facilities, buildings, fixtures, equipment, or other items as provided in the contract, or any amendment thereof, shall prevail over and be prior and superior to any conflicting or adverse rights of the undersigned, and the Government is authorized to enter upon the land for such purposes.

2. To secure the payment to the Government of the percentage royalty on production3/ provided for under the terms of said exploration project contract, or any amendment thereof, there is hereby granted to the Government a lien upon the land above referred to and upon any production of minerals therefrom, until said royalty is fully paid or ten years have elapsed from the date of the contract, whichever occurs first.

3. The undersigned shall commit no act nor assert any claim that may contravene or conflict with the lien, claim, or rights of the Government under the provisions of said contract. This agreement shall be binding upon the heirs, executors, administrators, successors, and assigns of the undersigned.

4. Changes and added provisions _____

Dated this _____ day of March, 195_.

Carl Bryson [Seal]

Mrs Frances Bryson [Seal]

_____ [Seal]

1/ Either (a) insert the legal description of the land, or (b) strike out the words "as follows" and insert "in a lease [or contract, deed, or other document] dated _____, and recorded in book _____ page _____ official records of said county." If (b) is used, the book and page of recordation cannot be dispensed with. If the space provided is insufficient, use an Annex, and refer to the Annex in the space.

2/ Insert the name of the Operator as it will appear in the exploration project contract.

3/ Mining or production from the land is not required, and in the absence of production there is no obligation to repay the Government.

Repayment by Operator.--a. Certification.--If at any time the Government considers that a discovery or development from which production may be made has resulted from the exploration work, the Government, at any time not later than six months after the Operator has rendered the final report and final account, may so certify in writing to the Operator. Such certification shall describe broadly or indicate the nature of the discovery or development.

b. Percentage royalty.--The Operator, or his successor in interest, shall pay to the Government a royalty on all minerals mined or produced from the land described in Article 2,--(1) regardless of any certification of discovery or development, from the date of the contract until the lapse of the time within which the Government may make such certification of discovery or development, or until the total net amount contributed by the Government, without interest, is fully repaid, whichever occurs first, unless the Government waives its right to a royalty; or (2) if the Government makes a certification of discovery or development, for a period of ten years (or other period fixed by the contract) from the date of the contract, or until the total net amount contributed by the Government, without interest, is fully repaid, whichever occurs first. Said royalty shall be a percentage of the net smelter returns, the net concentrator returns, or other net amounts realized from the sale or other disposition of any such production, in whatever form disposed of, including ore, concentrates, or metal, as follows:

(a) One and one-half (1½) percent of any such net amounts not in excess of eight dollars ($8.00) per ton.

(b) One and one-half (1½) percent of any such net amounts, plus one-half (½) percent of such net amounts for each additional full fifty cents ($0.50) by which such net amounts exceed eight dollars ($8.00) per ton, but not in excess of five (5) percent of such net amounts.

(For instance: the percentage royalty on a net amount of five dollars ($5.00) per ton, would be one and one-half (1½) percent; on a net amount of ten dollars ($10.00) per ton, three and one-half (3½) percent.)

c. Definitions.--As here used, "net smelter returns", "net concentrator returns", and "other net amounts realized from the sale or other disposition", mean gross revenue from sales; or if not sold, the market value of the material after it is mined in the form in which and the place where it is held. In the case of integrated operations in which the material is not disposed of as such, these terms mean what is or would be gross income from mining operations for percentage depletion purposes in income tax determination.

d. Lien for Payment.--To secure the payment of its percentage royalty, the Government shall have and is hereby granted a lien upon the land described in Article 2 and upon any production of minerals therefrom, until the royalty claim is extinguished by lapse of time or is fully paid.

e. Notice to Purchasers.--The Operator shall notify any purchaser of the production of the Government's royalty interest, and shall authorize and direct the purchaser to pay the royalty directly to the Government and to furnish the Government with copies of the settlement sheets; but failure or refusal by the purchaser to comply shall not relieve the Operator of liability to pay any royalty falling due.

f. No Obligation to Produce.--This article is not to be construed as imposing any obligation on the Operator or the Operator's successor in interest to engage in any mining or production operations.

Interior—Duplicating Section, Washington, D. C. 47318

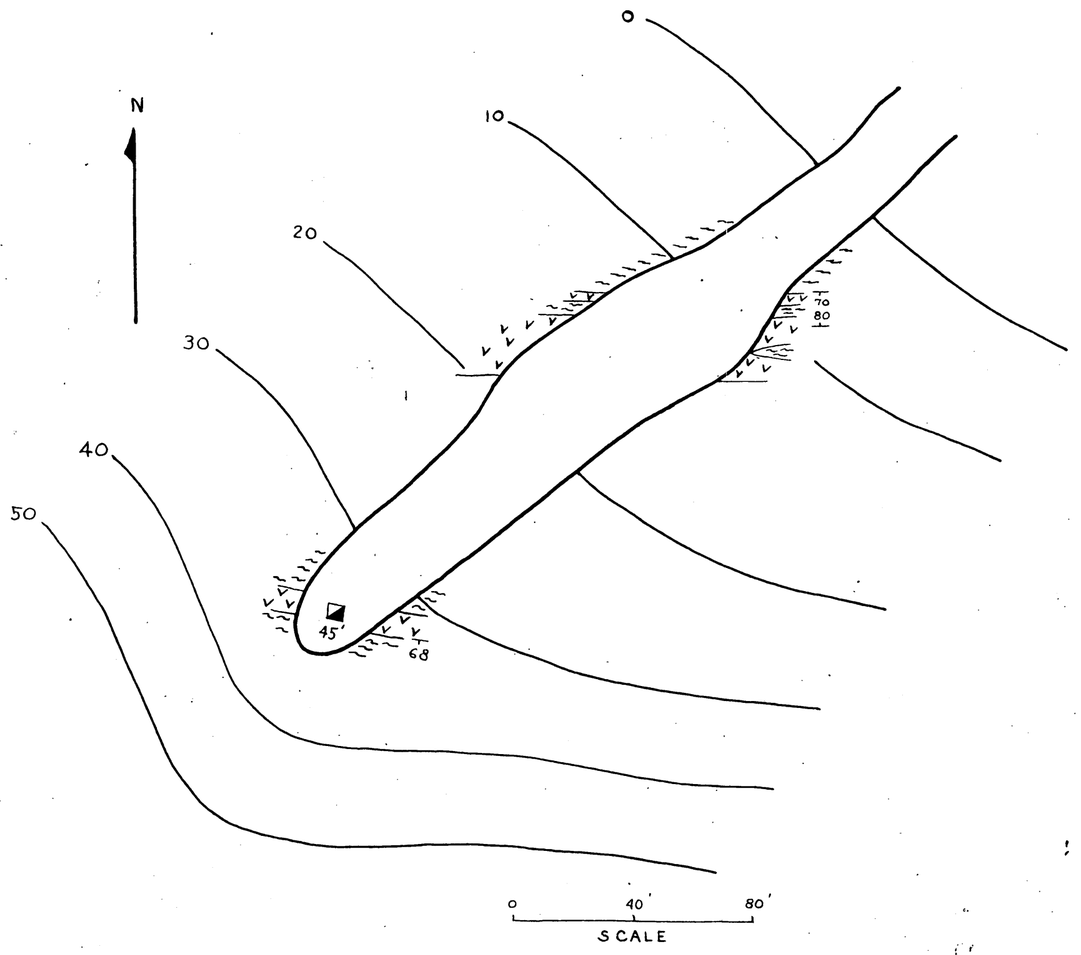

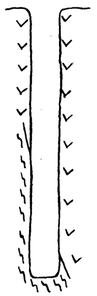

SECTION A-A'

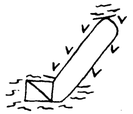

PLAN 45'-LEVEL

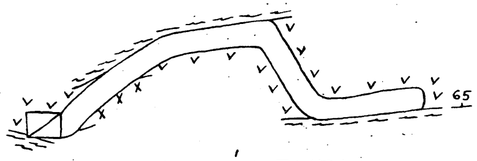

PLAN 30'-LEVEL

0 20' 40'
SCALE

SKETCH OF
BRYSON #2 MINE
MACON CO., N.C.

DMEA-3285 (mica)

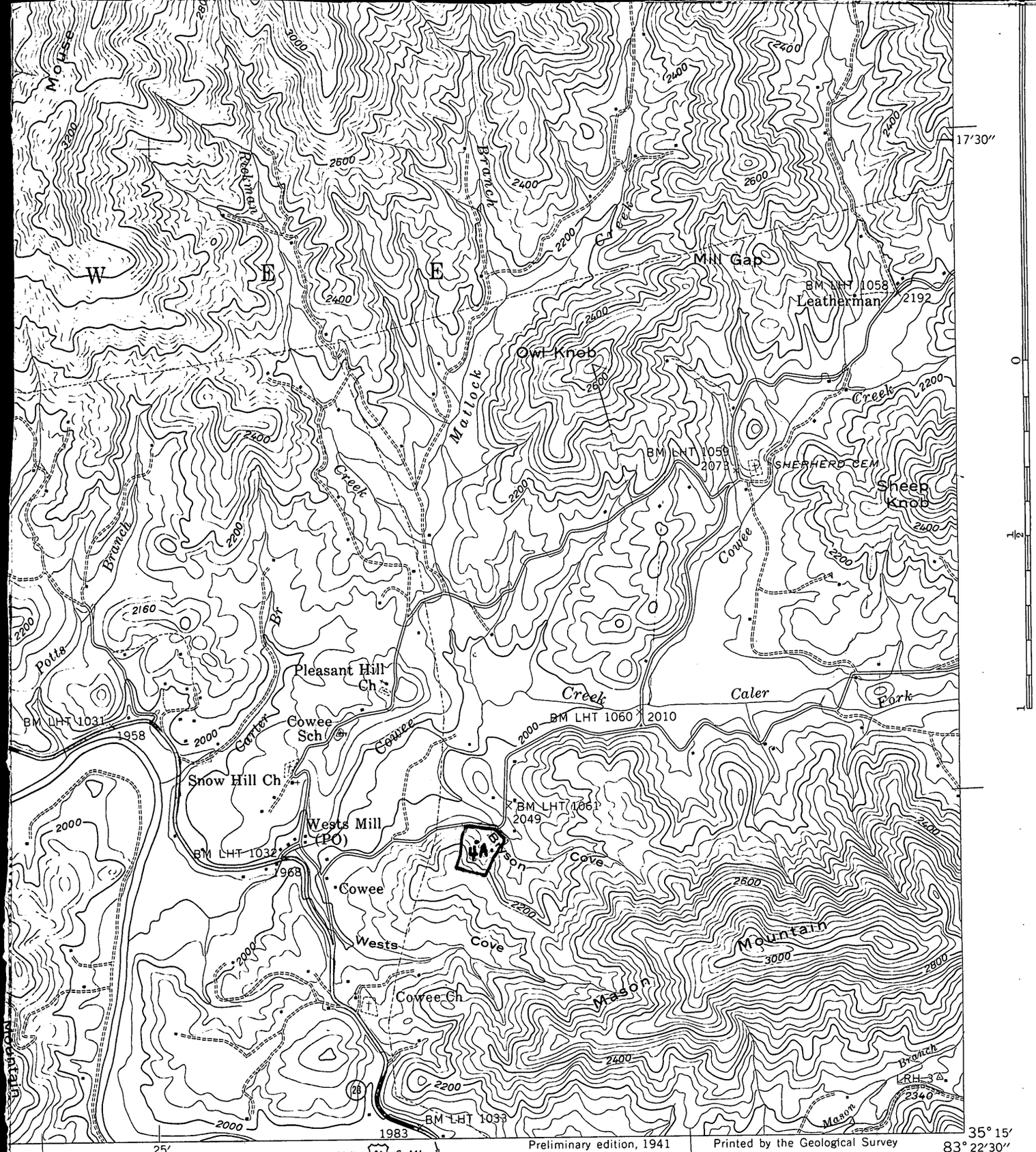

Preliminary edition, 1941

Printed by the Geological Survey

Polyconic projection. 1927 North American datum
10,000 foot grid based on North Carolina
rectangular coordinate system

2 Miles

10000 Feet

2 Kilometers

ROUTES USUALLY TRAVELED

HARD IMPERVIOUS SURFACES

OTHER SURFACE IMPROVEMENTS

19 U. S. ROUTE

28 STATE ROUTE

ALARKA, N. C.

166-SW

N 3515—W 8322.5/7.5

Present operations at Center of Property as marked.

UNITED STATES
DEPARTMENT OF THE INTERIOR
U. S. BUREAU OF MINES
~~METALLURGICAL STATION~~
JUNEAU, ALASKA

OFFICIAL BUSINESS

Box 560

Operating Committee
Defense Minerals Exploration Administration
Interior Building
Washington 25, D. C.