FILE ITEM OR INFORMATION REQUESTED	FRC BOX NO.
4715	867
2 Folders	

NATIONAL ARCHIVES WASHINGTON, D. C. 20408 USA
MAR 24 2 28 PM '70

DATE OF REQUEST	ACCESSION NO.	FOR RECORDS CENTER USE ONLY LOCATION OF RECORD(S) TO BE SEARCHED
	64A709	[illegible]

TO (Mail in window envelope)

General Services Administration
Federal Records Center NARS

(City) (Zone) (State)

NATURE OF SERVICE

☐ FURNISH COPY OF RECORD(S) ONLY ☐ PERMANENT WITHDRAWAL

☐ OTHER (Specify) [illegible]

FOR RECORDS CENTER USE ONLY

☐ RECORDS NOT IN CENTER CUSTODY ☐ MISSING (Neither record(s), information nor charge card found in container(s) specified)

☐ RECORDS PREVIOUSLY CHARGED OUT TO (Name, agency and date):

SERVICE	TOTAL	TIME REQUIRED	SEARCHER'S INITIALS
DOCUMENT	1	[illegible]	[illegible]
INFORMATION			
RESEARCH			

REMARKS

FOR USE OF REQUESTER

NAME OF REQUESTER: Mr. Austin

TELEPHONE NO.: 3347

NAME AND ADDRESS OF AGENCY (Include bldg. and room No.): 4450 [illegible]

RECEIPT OF RECORDS

REQUESTER PLEASE SIGN, DATE, AND RETURN THIS FORM, FOR FILE ITEM(S) LISTED ABOVE, ONLY IF THE BLOCK TO RIGHT HAS BEEN CHECKED BY THE RECORDS CENTER . . . ☐

SIGNATURE	DATE

OPTIONAL FORM NO. 11
JULY 1959
PRESCRIBED BY
GEN. SERVICES ADMIN.
FPMR (41 CFR) 101-11.4

☆ U. S. GOVERNMENT PRINTING OFFICE: 1969-354-166

REFERENCE REQUEST — FEDERAL RECORDS CENTERS

5011-103

DMEA Form 9

UNITED STATES
DEPARTMENT OF THE INTERIOR
Defense Minerals Exploration Administration

OFFICIAL DOCKET FILE

DMEA NO. 4732

1 4 MAR 1958 **1176**

Application (Denied
(Withdrawn ✓
(After disposition, delete items not applicable)

Contract (Terminated - not Certified
(Cancelled
(Terminated - Certified
(Royalty Agreement

This is the official contract file containing all official records of the project. The records contained in the files are checked and are arranged in this order:

Left Side

Interim Royalty Audits
Reports of Royalty Review
Certification of Discovery
Certificate of Audit (Final)
Interim Audit(s)
Report of Review
Termination Notice or Agreement
Recision Notice
Assignment of Contract
Contract Amendments (latest on top)
Contract with all exhibits and annexes
Owner's Consent to Lien
Subordination Agreement
✓ Leases and assignments of leases
✓ Application and attachments
(3) Envelope for maps

Right Side

Project summary
Work completed analysis
All other material is filed in chronological order with correspondence including the following reports as checked:

Final Field Team Report (Tab)
Operator's Final Report
(2R) Interim Reports
(2R) Operator's monthly reports and all attachments (latest on top)
X On-site Exam Report(s) (Tab) 8/12/57
(4) Settlement Sheets

When the volume of records is expected to warrant additional folders, or when convenience of reference warrants separate folders for certain records, they should be set up in this order:

Left Side

Folder No. 2: (In chron. order)
Interim Summary Reports by W. O. Engineers

Right Side

Operator's Semi-Annual Report for Certified Project, Field Team Interim Reports, Operator's Monthly Report with transmittal, narrative, maps, and Field Team review.

Folder No. 3: Maps (Use pocket folder or envelope. Fold maps with title block out and show reference to related document or correspondence.)

Folder No. 4: Settlement Sheets

Folder No. 5: Drill Logs

RECEIVED JAN 20 1958
DATE | INITIALS | CODE

MINING LEASE

THIS LEASE, Made and entered into this 8th day of December, 1957, by and between Gil C. Holshue and Anne Holshue, his wife, and ~~D. A. DuBois~~ and Catherine DuBois, his wife, all of Basin, Montana, Lessors, and Western America of Montana, a corporation, of Helena, Montana, Lessee, WITNESSETH:

That for and in consideration of the sum of One and No/100 ($1.00) Dollars, the receipt of which is hereby acknowledged, and of the premises and the terms and conditions hereinafter set forth, the Lessors hereby lease and let to the Lessee those certain unpatented lode mining claims situated in Township Seven (7) North, Range Five (5) West, in Jefferson County, Montana, and described as follows, to-wit:

CINDY LODE CLAIM NO. 1
CINDY LODE CLAIM NO. 2
CINDY LODE CLAIM NO. 3
CINDY LODE CLAIM NO. 4
CINDY LODE CLAIM NO. 5
CINDY LODE CLAIM NO. 6
MIDNIGHT EXTENSION LODE CLAIM
MORNING EXTENSION LODE CLAIM

Term: This lease shall continue and remain in effect for a period of Three years from and after the date hereof, and as long thereafter as the Lessee shall keep, observe and perform all of the terms and conditions hereof on its part.

Right of Possession: During the life of this Lease, the Lessee shall have the exclusive right to the possession of said mining claims, and to mine, explore, and develop the same, and to mine and extract ore and other products therefrom, and to market such ore and other products, and ore or other materials from the dumps now upon said mining claims, crude, or may concentrate or otherwise treat such ores and other materials and market the concentrates and other products of concentration and other treatment thereof and retain the proceeds thereof, subject to the payment of royalties, as herein provided, and the Lessee shall have the right, during the life of this Lease, for the purposes aforesaid, to install upon said mining claims such machinery, equipment, and other facilities as it may deem necessary or proper.

Royalties: The Lessee shall pay to the Lessors, during the life of this Lease, a royalty of ten per cent. (10%) of the net smelter returns from all ores and other materials marketed by the Lessee from said mining claims, but not less than fifty cents (50¢) per dry ton. "Net smelter returns", as the term is herein used, means the amount paid by the smelter or other purchaser for ores and other materials after deducting smelting charges and making other smelter deductions, and deducting railroad freight from the railroad shipping point to the smelter, and Two Dollars ($2.00) per wet ton for trucking from the mine to the railroad shipping point; provided, however, that if ore or other materials are delivered to the smelter or other purchaser by truck, the sum of Six Dollars ($6.00) per wet ton shall be deducted from the returns as full transportation costs before computation of royalties.

In case of products not requiring smelting, the same shall be marketed where the best price is reasonably obtainable, and the Lessee shall pay to the Lessors the royalty of 10% upon the returns from sales of such products.

Place of Shipment: No ores or other materials shall be shipped to any smelter or other purchaser outside the State of Montana until the Lessee shall have first notified the Lessors, in writing, of the name and address of such smelter or other purchaser to which such shipment is contemplated.

Deposit of Copy: A copy of this lease shall be deposited with any smelter or other purchaser to which any ore or other materials produced hereunder shall be shipped or sold and such smelter or other purchaser is hereby directed to deduct the royalties herein provided for, and pay the same to the Lessors.
~~First National Bank & Trust Company at Helena, Montana, to be disposed of by said Bank, as hereinafter provided.~~

Place of Payment: All payments hereunder shall be made to the Lessors at Basin, Montana.

Assessment Work: The Lessee shall perform the annual assessment work upon said claims required by the Acts of Congress, so as to protect said claims from relocation by others.

N Leonard

Olfn Lessors:

Inspection: The Lessors, or any of them, or their agents, shall have the right, at their own risk, at all reasonable hours, to go upon said mining claims and into the workings thereon and into the mills and other improvements thereon, for the purpose of inspection and the taking of samples, and for such purposes may use, without cost, any appliances thereon belonging to the Lessee, but without interference with the operations of the Lessee herein.

Timber: The Lessee may cut timber standing upon said mining claims for use in its mining and/or milling operations upon said claims.

Removal of Ores: No ores or other materials shall be removed from said mining claims by the Lessee except for shipment to market, or for concentrating or other processing for market; and the Lessee shall not, after the forfeiture or other termination hereof, remove from said mining claims any ores, concentrates, or other products of such operations, but shall be entitled to receive the proceeds of any such products then in transit to market, subject to the payment of royalties as herein provided. The term "in transit to market" means not only ores or other materials which have been shipped to market, but ores and other materials which shall have been removed from said mining claims for concentrating or other processing for market; but such ores and other materials shall be processed and marketed with reasonable diligence.

Character of Work: All work done hereunder shall be done consistently with good mining and milling practice.

Taxes: The Lessors shall pay all County and State taxes upon said mining claims, but the Lessee shall pay all Federal, State, County, and other public taxes and assessments levied upon the improvements, machinery, equipment, and personal property placed upon said mining claims by the Lessee, or against any operations hereunder, or the products of any such operations, and shall pay all Net Proceeds taxes and all Gross Metal Mines taxes; all such taxes and assessments to be paid before the same shall become delinquent.

Forfeiture:

In the event of the failure of the Lessee to keep, observe, and perform any other of the terms and conditions of this Lease on its part, the Lessors may declare a forfeiture hereof by giving to the Lessee written notice of their intention to declare such forfeiture, such notice to specify the default or defaults by reason of which such forfeiture is declared by the Lessors, and if the Lessee shall, within sixty (60) days after the service of such notice upon it, cure and correct such specified default or defaults, then this Lease shall continue in force as though such default or defaults had not occurred; but if the Lessee shall not, within said period of 60 days, cure and correct such default or defaults, such forfeiture shall become complete and all rights of the Lessee under this Lease shall terminate at the end of such 60-day period, without further notice; but the Lessee shall still be liable to the Lessors upon any obligations theretofore accruing, including royalties upon products in transit to market.

Notices: Notices given to the Lessee by the Lessors may be signed by Gil C. Holshue and D. A. Du Bois, and when so signed shall have the same effect as though signed by all of the Lessors, and, likewise, notice served upon said Gil C. Holshue and D. A. DuBois shall have the same effect as though served upon all of the Lessors.

Service of Notices: Notice to the Lessors may be given by personal service upon said Gil C. Holshue and D. A. DuBois, or by Registered Mail, in an envelope securely sealed and addressed to Gil C. Holshue and D. A. DuBois at Basin, Montana, with postage fully prepaid thereon, and deposited in the United States Post Office at Billings, or Helena, or Basin, Montana; service by mail to be complete upon such deposit in such Postoffice.

Service of notices upon the Lessee may be given by personal service upon an officer of the Lessee or by Registered Mail in the form and manner hereinabove specified, and deposited in the United States Postoffice at Basin or Helena, Montana; service by mail to be complete upon such deposit in the Postoffice.

Surrender: The Lessee may at any time, by written notice served upon the Lessors, as herein provided, surrender this Lease, and shall thereafter be under no further obligations hereunder, except with reference to the removal of property, as herein provided, and except that as to any obligation which shall have theretofore accrued, the Lessee shall still be bound.

Surrender of Possession: In the event of the surrender, forfeiture, or other termination of this Lease, the Lessee shall surrender to the Lessors the immediate possession of said mining claims, subject to the right of the Lessee to remove machinery and other property, as hereinafter provided.

Removal of Property: In the event of the termination of this Lease in any manner, the Lessee shall have ninety (90) days after such termination in which to remove from said mining claims any and all mine, mill, or other machinery, appliances, tools, rails, aid pipe, and other equipment and personal property placed thereon by it, other than buildings and similar structures, mine timbering, and other permanent improvements; provided, that in the event of such termination of this Lease, the Lessors may, within ten (10) days after receiving from the Lessee, invoices showing the cost thereof, purchase rails and pipe in place upon said mining claims at such invoice price, such rails and pipe to remain in place until the expiration of said option period and not to be disturbed until and unless such option expires without such purchase.

In the event the removal of such removable property is not feasible during said period of 90 days, by reason of bad weather and/or road conditions, the time of removal shall be automatically extended so that the Lessee shall have 90 days of feasible weather and road conditions for such removal; but while awaiting such removal, the property so to be removed shall be so disposed as not to interfere with operations by the Lessors or any of their lessees or other contractees.

Any property not removed, as in this paragraph provided, shall become the property of the Lessors on the expiration of the time for removal herein given.

Obligations of the Lessee: The Lessee shall conduct all operations hereunder in such manner as not to subject the Lessors, or any of them, nor said mining claims, to any liability for debts or other obligations, nor to liability for damages incurred in or arising out of any of the operations of the Lessee hereunder; and the Lessee hereby agrees to hold the Lessors and each of them, and said property, harmless from any and all such debts or other obligations and liability for damages, and all costs and expenses arising therefrom.

Assignment: This Lease shall not be assigned by the Lessee, in whole or in part, without the previous written consent of Gil C. Holshue and D. A. DuBois; but subject to the foregoing, the same shall be binding upon and inure to the benefit of the heirs, personal representatives, successors, and assigns of the respective parties hereto.

It is specifically understood and agreed that in the event of the termination of that certain mining lease entered into between the parties hereto on the 16th day of June, 1956, recorded in Book 8 Miscellaneous, Page 573, Jefferson County Records, then this lease shall also simultaneously and automatically terminate.

IN WITNESS WHEREOF, The parties hereto have executed these presents the day and year hereinabove first written.

G. C. Holshue

Anne Holshue

D. A. DuBois

Catherine DuBois

ATTEST:

E. Kheadle
Its Secretary

(CORPORATE SEAL)

WESTERN AMERICA OF MONTANA

By T. V. Leonard
Its President

OFFICE OF COUNTY CLERK AND RECORDER

STATE OF MONTANA,
County of Jefferson, } ss.

I, Alta M. Dawson, County, Clerk and Ex-Officio Recorder in and for said County and State, DO HEREBYBY CERTIFY, That the above and foregoing which is hereto attached is a true, full and correct copy of Mining Lease, "Holshue etal to Western America of Montana"

as found on record, Book 9 of Misc., Page 398

Records of said County.

In witness whereof, I herunto affix my hand and the seal of said County this 7th day of January, 19 58

By Alta M. Dawson
County Clerk and Ex-Officio Recorder.

Deputy.

RECEIVED JAN 20 1958

DATE	INITIALS	CODE

BOOK 9 PAGE 404

STATE OF MONTANA,)
County of Lewis & Clark) ss.

On this 31st day of December, 1957, before me, the undersigned, a Notary Public for the State of Montana, personally appeared Gil C. Holshue and Anne Holshue, his wife, and D. A. DuBois and Catherine DuBois, his wife, known to me to be the persons whose names are subscribed to the foregoing instrument, and acknowledged to me that they executed the same.

IN WITNESS WHEREOF, I have hereunto set my hand and affixed my Notarial Seal the day and year in this Certificate first above written.

Notary Public for the State of Montana;
Residing at
My Commission expires Sept. 30, 1959

76056

RECORDED_____
INDEXED A.M.D.
COMPARED ✓

RECORDER'S OFFICE
STATE OF MONTANA,)
County of Jefferson.) ss.

I hereby certify that the within instrument was filed for record this 6 day of January A. D. 1958, at 11:00 o'clock A. M., and recorded in book 9 of Misc. on page 398.

Alta M. Dawson
County Recorder.

By_____ Deputy

Fee, $7.00

OFFICIAL FILE
DMEA
RECEIVED OCT 21 19
DATE | INITIAL | CODE

ASSIGNMENT OF MINING LEASE

WHEREAS, on the 16th day of june, 1956, a certain mining lease was made and entered into by and between Gil C. Holshue and Anne Holshue, his wife, and D. A. DuBois and Catherine DuBois, his wife, lessors, and Western America Uranium Exploration Corporation, a Delaware corporation, lessee, covering the following described patented quartz lode mining claims situated in T7N, R5W, in Jefferson County, Montana, to-wit:

The MORNING	U. S. Survey No. 8518
The MIDNIGHT	U. S. Survey No. 8519

said lease being recorded in Book 8 Misc., page 573, in the office of the Clerk and Recorder of Jefferson County, Montana;

WHEREAS, the said lease and all rights thereunder or incident thereto are now owned by Western Americe Uranium Exploration Corporation:

NOW THEREFORE, for and in consideration of the sum of one dollar and other valuable considerations, the receipt of which is hereby acknowledged, the undersigned, the present owner of the said lease and all rights thereunder or incident thereto, does hereby bargain, sell, transfer, assign and convey unto Western America of Montana, a corporation of Helena, Montana, all right, title and interest of the original lessee and present owner in and to the said lease and rights thereunder, together with all personal property used or obtained in connection therewith.

And for the same consideration, the undersigned, for itself and assigns does covenant that it is the lawful owner of the said lease and rights and interests thereunder and of the personal property thereon or used in connection therewith; that the undersigned has good right and authority to sell and convey the same, and that said rights, interest and property are free and clear from all liens and encumbrances, and that all rentals and royalties due and payable thereunder have been duly paid; and that the undersigned will warrant and defend the same against the lawful claims of all persons whomsoever.

IN WITNESS WHEREOF, the undersigned has caused its corporate name to be subscribed and seal affixed by its duly authorized officers this 12th day of October, 1957.

Attest: E. Schwade
Secretary

Western Americe Uranium Exploration Corporation
By T V Leonard, President

STATE OF MONTANA
:SS.
COUNTY OF LEWIS AND CLARK

On this 12th day of October, 1957, before me, the undersigned, a Notary Public for the State of Montana, personally appeared T. V. Leonard and E. K. Cheadle, known to me to be the President and Secretary respectively of Western America Uranium Exploration Corporation, the corporation, who executed the foregoing instrument on behalf of said corporation, and acknowledged to me that such corporation executed the same.

IN WITNESS WHEREOF, I have hereunto set my hand and affixed my notarial seal the day and year in this certificate first above written.

Lois M. Gaffick
Notary Public for the state of
Montana, residing at Helena, Montana.
My commission expires

NOTARY PUBLIC for the State of Mo[illegible]
Residing at Helena, Montana.
My commission expires April 17, 1959

CONSENT AND APPROVAL.

We, the undersigned, the lessors in the mining lease described in the foregoing assignment, do hereby consent to the assignment of said mining lease from Western America Uranium Exploration Corporation to Western America of Montana, a Montana corporation, and do hereby approve the foregoing assignment thereof.

Witnessed By:

Elizabeth F. Dougherty
Clinton J. Hansen

Gil L. Holshue
Anne F. Holshue
D. A. DuBois
Catherine DuBois

Diamond Core Drilling
Mining
Quarries
Shaft Sinking
Tunnel Driving

Boyles Bros.
DRILLING COMPANY

CONTRACTORS · ENGINEERS · GEOLOGISTS
General Offices
1321 South Main Street Phone HUnter 4-4401
SALT LAKE CITY 15, UTAH

October 9, 1957

Reply to: S. L. C.

Western America of Montana
P. O. Box 782
Helena, Montana

Gentlemen:

After checking the area at the Morning and Midnight Project where the drilling is to be done, we submit the following proposal for your consideration.

1. Drilling Rate

	AX	BX	NX	Pipe
0 - 250	$6.00	$6.60	$7.30	$9.00
250 - 500	6.60	7.30		

2. Reaming - If necessary for water return or caving, $2.90 per ft.

3. Cementing - Will be charged for at the rate of $9.60 per hour, plus the cost of cement or cement substitute.

4. Access Roads and Drill Stations to be supplied at no cost to us.

5. Lost Casing - If any, will be charged for at 60% of list price.

Should the foregoing rates meet with your approval, we could mobilize within one week of notice to proceed.

Thank you for calling on us.

Yours very truly,

A. F. Goldsworthy

A. F. Goldsworthy
Manager, Drilling Division

AFG/em

Box 278
Helena, Montana
24 Sep 57

Western America of Montana
P. O. Box 782
Helena, Montana

Gentlemen: Att: Richard N. Miller

Pursuant to your 11th of September request for a diamond drilling bid on your Morning-Midnight property north of Basin, Montana, I submit the following:

Moving equipment to property	$125.00
Moving off property	125.00
Drilling surface and setting standpipe	$8.00/ft.
Drilling NX	7.00/ft.
Setting BX casing	0.50/ft.
Drilling BX	6.50/ft.
Setting AX casing	0.35/ft.
Drilling AX	6.00/ft.
Reaming BX to NX, and casing	4.00/ft.
Reaming AX to BX, and casing	3.50/ft.
Cementing	2.50/ft.
Down time	$9.00/hr.

It is my understanding that:

-Final approval by DNRA still pending.

-Drilling sites and access thereto are to be prepared by you.

-This bid and the performance thereof is contingent upon other committments I may have.

-Holes to be 45 degrees, or steeper.

Very truly yours,

Gustaf M. Carlson

OPPICE [illegible]
D M E R
RECEIVED [illegible] 14 1957
[illegible] ROUTE

October 2, 1957

WESTERN AMERICA OF MONTANA
P. O. Box 782
Helena, Montana

Attention: Mr. Richard N. Miller

Dear Mr. Miller:

We wish to furnish our quotation for diamond drilling on your Morning-Midnight property located near Basin, Montana, visited recently by yourself and our Mr. T. M. Welsch.

It is understood that the drilling consists of approximately 5 to 7 holes totaling 2100' from the surface and that you wish to penetrate the ore body with at least an AX hole and larger if possible.

We propose to start holes with 4½" casing and if possible, penetrate through the overburden and decomposed coarse grained quartz monzonite with this size. Thereafter, we shall drill with each size as far as possible before dreducing.

We believe that with the use of reaming cementing and drilling mud as conditions demand, a satisfactory core and sludge sample may be recovered.

We propose to furnish labor, diamond core drill, drill pump, rods, casing, core barrels, diamond bits and shells and all other necessary accessories, except core boxes and sample bags for the follwing prices.

Drill or drive casing through overburden and decomposed bed rock. $12.00 per foot.

0	100	3 9/16	11.00 per foot
0	250	NX	9.00 per foot
250	450	NX	10.00 per foot
0	250	BX	8.60 per foot
250	450	BX	9.60 per foot
0	250	AX	8.10 per foot
250	500	AX	9.10 per foot

In the event that loose and caving material, water courses or any conditions are encountered which in the Contractor's opinion tends to make drilling impractical without the use of casing or cement, a charge of .50¢ per foot would be made for setting casing:

For reaming:

NX Casing	5.50 per foot
BX Casing	5.00 per foot

Western of America

AX Casing 4.50 per foot

Placing and drilling cement $4.50 per foot.

Contractor agrees to mobilize and demobilize equipment from and to Spokane for the lump sum of $1.050.40.

In the event of delays due to inclement weather, convenience of the Mining Company or any reason not attributable to Contractor or breakdown of his equipment, we shall expect to be reimbursed for our continuing costs at the rate of $8.00 per hour.

In the event of negotiated wage increases during the life of the Contract, Contractor shall expect to be reimbursed for his increased costs.

As is customary in the industry, we would expect to enter into an escrow agreement, which will assure Contractor of funds sufficient to meet invoices after your Company's approval.

Our employees will be covered by Workmens Compensation to comply with the Montana State Act and the job will be covered by Public Liability Insurance in the amount of $100,000.00. and $300,000.00 and property damage in the amount of $100,000.00.

We wish to thank you for the opportunity of furnishing our quotation.

Yours very truly,

R. S. McCLINTOCK COMPANY

Peter J. Wanderer

PJW:ss

RECEIVED
OCT 9 1957
U. S. G. S.
SPOKANE, WASH

UNITED STATES
DEPARTMENT OF THE INTERIOR
DEFENSE MINERALS EXPLORATION ADMINISTRATION
So. 157 Howard Street
Spokane 4, Washington

OFFICIAL FILE COPY
DMEA
RECEIVED APR 22 1957

DATE	INITIALS	CODE

April 19, 1957

Mr. George C. Selfridge, Chairman
Operating Committee, DMEA
Department of the Interior
Washington 25, D. C.

Re: New Application (Lead-Zinc-Copper)
Western American of Montana, Inc.
Morning Mine
Jefferson County, Montana

Dear Mr. Selfridge:

Enclosed are an original and two copies of an application for DMEA assistance to explore for lead-zinc-copper ores in Jefferson County, Montana.

This property was the subject of a DMEA application, Docket No. DMEA-2767, which was denied by the Administrator's letter of April 27, 1953. A considerable amount of work has been done since the inspection of 1953 involving additional drifting on the lower level and trenching. Therefore, a re-examination appears justified.

Our field men will be in the neighborhood of this property next week making examinations in connection with Dockets No. DMEA-4276 and DMEA-4685, and will examine this property at that time.

Sincerely yours,

A. E. Weissenborn

A. E. Weissenborn
Executive Officer, DMEA
Field Team, Region I, NW District

Enclosures

cc: USBM (2)
Geologist

This lease made this 16th day of June, 1956, by and between GIL C. HOLSHUE and ANNE HOLSHUE, his wife, of Basin, Montana, and D. A. DuBOIS and CATHERINE DuBOIS, his wife, of the same place, Lessors, and WESTERN AMERICA URANIUM EXPLORATION CORPORATION, a Delaware Corporation, having its offices at Helena, Montana, Lessee, WITNESSETH:

That for and in consideration of the sum of Five Thousand Dollars ($5,000.00) to be paid as hereinafter provided, and in consideration of the other terms and conditions hereinafter set forth, the Lessors hereby lease and let to the Lessee those certain patented quartz lode mining claims situated in T7N, R5W, in Jefferson County, Montana, and described as follows, to-wit:

The MORNING, U. S. Survey No. 8518,
The MIDNIGHT, U. S. Survey No. 8519;

Together with the appurtenances.

1. Payment of Consideration: The said consideration of $5,000.00 shall be paid as follows, to-wit:

$2,000.00 in cash at the time of the execution and delivery hereof, the receipt whereof is hereby acknowledged;

The further sum of $1,500.00 on or before August 1, 1956;

The further sum of $1,500.00 on or before September 1, 1956;

provided that the Lessee shall, on or before August 1, 1956, notify the Lessors, in writing, of its election to continue under this Lease or to abandon the same; and if the Lessee shall so elect to continue under this lease, it shall thereby become obligated to make said deferred payments of $1,500.00 each, as and when hereinabove specified; but if the Lessee shall so notify the Lessors of its election to abandon this lease, then it shall be under no obligation to make further payments hereunder, and the Lessors shall retain the said $2,000.00 paid at the time of the execution and delivery hereof, as consideration for this lease.

OFFICIAL FILE COPY
DMEA
RECEIVED APR 22 1957
DATE | INITIALS | CODE

No payment made under the terms of this paragraph No. 1 shall be subject to recoupment out of royalties or otherwise but shall constitute consideration for this lease.

2. Term: Upon the payment of said consideration of $5,000.00 as and when provided for in paragraph No. 1 hereof, this lease shall continue in force until January 31, 1957, and as long thereafter as the Lessee shall keep, observe, and perform all of the terms and conditions of this lease on its part.

3. Right of Possession: During the life of this lease, the Lessee shall have the exclusive right to the possession of said mining claims and to mine, explore, and develop the same and to mine and extract ore and other products therefrom and to market such ore and other products, and ore or other materials from the dumps now upon said mining claims, crude, or may concentrate or otherwise treat such ores and other materials and market the concentrates and other products of concentration and other treatment thereof and retain the proceeds thereof, subject to the payment of royalties as herein provided, and the Lessee shall have the right, during the life of this lease, for the purposes aforesaid, to install upon said mining claims such machinery, equipment, and other facilities as it may deem necessary or proper.

4. Royalties: The Lessee shall pay to the Lessors, during the life of this lease, a royalty of twelve and one-half percent (12½%) of the net smelter returns from all ores and other materials marketed by the Lessee from said mining claims, but not less than fifty cents (50¢) per dry ton. "Net smelter returns", as the term is herein used, means the amount paid by the smelter or other purchaser for ores and other materials after deducting smelting charges and making other smelter deductions and deducting railroad freight from the railroad shipping point to the smelter, and Two Dollars ($2.00) per wet ton for trucking from the mine to the railroad shipping point; provided, however, that if ore or other materials are delivered to the smelter or other purchaser by truck, the sum of Six Dollars ($6.00)

per wet ton shall be deducted from the returns as full transportation costs before computation of royalties.

In the case of products not requiring smelting, the same shall be marketed where the best price is reasonably obtainable and the Lessee shall pay to the Lessors the royalty of 12½% upon the returns from sales of such products.

5. Place of Shipment: No ores or other materials shall be shipped to any smelter or other purchaser outside the State of Montana until the Lessee shall have first notified the Lessors, in writing, of the name and address of such smelter or other purchaser to which such shipment is contemplated.

6. Deposit of Copy: A copy of this lease shall be deposited with any smelter or other purchaser to which any ore or other materials produced hereunder shall be shipped or sold and such smelter or other purchaser is hereby directed to deduct the royalties herein provided for and pay the same to the First National Bank & Trust

Company at Helena, Montana, to be disposed of by said Bank as hereinafter provided.

7. Advance Royalty: The Lessee shall, as a condition to the continuance of this lease in force during the year 1957, between January 1 and February 1, 1957, pay to the Lessors the sum of $5,000.00 as advance royalty for the calendar year 1957, such payment being subject to recoupment only out of royalties paid during the calendar year 1957, as hereinafter provided; and as a condition to the continuance of this lease in force after the calendar year 1957, the Lessee shall, between January 1 and June 1 of each succeeding calendar year, beginning with the year 1958, pay to the Lessors the sum of $5,000.00 less the amount of royalties theretofore paid during the them current calendar year, as advance royalty, to be recouped only out of royalties paid during the then remainder of such calendar year, as hereinafter provided.

8. Recoupment of Advance Royalty: Any payment of advance royalty made by the Lessee as provided in paragraph No 7 hereof, shall be recoupted out of royalties thereafter paid during the calendar year in which such advance royalty is paid, but not otherwise, to the extent of such royalties, such payments being cash guaranties that the Lessors shall receive at least $5,000.00 in each calendar year while this lease is in force. Any excess of royalties paid during any such year, over and above the amount of such payment of advance royalty, shall be credited to the Lessors.

9. Place of Payment: All payments, other than the initial sum of $2,000.00, shall be made to the First National Bank & Trust Company, of Helena, Montana, and said Bank is instructed to deposit all payments of advance royalties and current royalties to the credit of the Lessors,

One-half (½) thereof to the credit of
Gil C. Holshue and Anne Holshue; and

One-half (½) thereof to the credit of
D. A. DuBois and Catherine DuBois;

provided, however, that upon the payment of such advance royalty in any year, as provided in paragraph No. 7 hereof, said Bank is instructed to deposit to the credit of the Lessee royalties thereafter received by said Bank during the then remainder of the calendar year in which such deposit is made, toward the reimbursement of the Lessee for such advance royalty, as provided in paragraph No. 8 hereof; any excess in any year of royalties paid to said Bank over and above the advance royalty paid during that year to be credited to the Lessors.

The charges of said Bank for handling such deposits shall be paid by the Lessors.

10. Inspection: The Lessors, or any of them, or their agents, shall have the right, at their own risk, at all reasonable hours, to go upon said mining claims and into the workings thereon and into the mills, and other improvements thereon, for purpose of inspection and the taking of samples, and for such purposes may use, without cost, any appliances thereon belonging to the Lessee, but without interference with the operations of the Lessee herein.

11. Timber: The Lessee may cut timber standing upon said mining claims for use in its mining and/or milling operations upon said claims.

12. Removal of Ores: No ores or other materials shall be removed from said mining claims by the Lessee except for shipment to market, or for concentrating or otherwise processing for market; and the Lessee shall not, after the forfeiture or other termination hereof, remove from said mining claims any ores, concentrates, or other products of such operations, but shall be entitled to receive the proceeds of any such products then in transit to market, subject to the payment of royalties as herein provided. The term "in transit to market" means not only ores or other materials which have been shipped to market but ores and other materials which shall have been removed from said mining claims for concentrating or other processing for market; but such ores and other materials shall be processed and marketed with reasonalbe diligence.

13. Character of Work: All work done hereunder shall be done consistently with good mining and milling practice.

The billing of all shipments of ore and other products shall show that it comes from the MORNING and MIDNIGHT mining claims and GIL C. HOLSHUE, ET AL, owners,

14. Taxes: The Lessors shall pay all County and State taxes upon said mining claims but Lessee shall pay all Federal, State, County, and other public taxes and assessments levied upon the improvements, machinery, equipment, and personal property placed upon said mining claims by the Lessee, or against any operations hereunder, or the products of any such operations, and shall pay all Net Proceeds taxes and all Gross Metal Mines taxes; all such taxes and assessments to be paid before the same shall become delinquent.

15. Forfeiture: (a) If the Lessee shall fail to make either of the deferred payments required by the provisions of paragraph No. 1 hereof, as and when in said paragraph provided, or having made said payments, shall fail to make any payment of

advance royalty, as and when provided in paragraph No. 7 hereof, this Lease shall thereupon become null and void, without notice, unless otherwsie agreed to in writing by the parties hereto.

(b) If this lease shall not have become null and void under the provisions of subdivision (a) of this paragraph, in the event of the failure of the Lessee to keep, observe, and perform any other of the terms and conditions of this lease on its part, the Lessors may declare a forfeiture hereof by giving to the Lessee written notice of their intention to declare such forfeiture, such notice to specify the the default or defaults by reason of which such forfeiture is declared by the Lessors, and if the Lessee shall, within sixty (60) days after the service of such notice upon it, cure and correct such specified default or defaults, then this lease shall continue in force as though such default or defaults had not occurred; but if the Lessee shall not, within said period of 60 days, cure and correct such default or defaults, such forfeiture shall become complete and all rights of the Lessee under this lease shall terminate at the end of such 60 day period, without further notice; but the lessee shall still be liable to the lessors upon any obligations theretofore accruing, including royalties upon products in transit to market.

16. Notices: Notices given to the Lessee by the Lessors may be signed by Gil C. Holshue and D. A. DuBois, and when so signed shall have the same effect as though signed by all of the Lessors, and likewise, notice served upon said Gil C. Holshue and D. A. DuBois shall have the same effect as though served upon all of the Lessors.

17. Service of Notices: Notice to the Lessors may be given by personal service upon said Gil C. Holshue and D. A. DuBois, or by registered mail, in an envelope securely sealed and addressed to Gil C. Holshue and D. A. DuBois at Basin, Montana, with postage fully prepaid thereon, and deposited in the United States Post Office at Billings, or Helena, or Basin, Montana; service by mail to be complete upon such deposit in such Post Office.

Service of notices upon the Lessee may be given by personal service upon an officer of the Lessee or by registered mail in the form and manner hereinabove specified, and deposited in the United States Post Office at Basin or Helena, Montana; service by mail to be complete upon such deposit in the Post Office.

18. Surrender: The Lessee may at any time, by written notice served upon the Lessors, as herein provided, surrender this lease, and shall thereafter be under no further obligations hereunder, except with reference to the removal of property, as herein provided, and except that as to any obligation which shall have theretofore accrudd, the Lessee shall still be bound.

19. Surrender of Possession: In the event of the surrender, forfeiture, or other termination of this lease, the Lessee shall surrender to the Lessors the immediate possession of said mining claims, subject to the right of the Lessee to remove machinery and other property as hereinafter provided.

20. Payments Retained: All payments made hereunder are either considerations for this lease or rentals and shall be retained by the Lessors in any event.

21. Removal of Property: In the event of the termination of this lease in any manner, the Lessee shall have ninety (90) days after such termination in which to remove from said mining claims any and all mine, mill, or other machinery, appliances, tools, rails, air pipe, and other equipment and personal property placed thereon by

it, other than buildings and similar structures, mine timbering, and other permanent

improvements; provided, that in the event of such termination of this lease, the Lessors may, within ten (10) days after receiving from the lessee, invoices showing the cost thereof, purchase rails and pipe in place upon said mining claims at such invoice price, such rails and pipe to remain in place until the expiration of said option period and not to be disturbed until and unless such option expires without such purchase.

In the event the removal of such removable property is not feasible during said period of 90 days, by reason of bad weather and/or road conditions, the time of removal shall be automatically extended so that the Lessee shall have 90 days of feasible weather and road conditions for such removal; but while awaiting such removal, the property so to be removed shall be so disposed as not to interfere with operations by the Lessors or any of their lessees or other contractees.

Any property not removed, as in this paragraph provided, shall become the property of the Lessors on the expiration of the time for removal herein given.

22. Obligations of the Lessee: The Lessee shall conduct all operations hereunder in such manner as not to subject the Lessors, or any of them, nor said mining claims, to any liability for debts or other obligations nor to liability for damages incurred in or arising out of any of the operations of the Lessee hereunder; and the Lessee hereby agrees to hold the Lessors and each of them and said property harmless

from any and all such debts or other obligations and liability for damages and all costs and expenses arising therefrom.

23. Assignment: This lease shall not be assigned by the Lessee, in whole or in part, without the previous written consent of /Gil C. Holshue and D. A. DuBois; but subject to the foregoing, the same shall be binding upon and inure to the benefit of the heirs, personal representatives, successors, and assignes of the respective parties hereto.

This lease is executed in quintuplicate. This is ~~xxxxxxxxxx~~ the original.

IN WITNESS WHEREOF the parties hereto have executed these presents the day and year hereinabove first written.

Gil C. Holshue

Anne Holshue

D. A. DuBois

Catherine DuBois

LESSORS

ATTEST:

E. K. Cheadle
Its Secretary

(Corporate Seal)

WESTERN AMERICA URANIMM EXPLORATION CORPORATION

BY T V Leonard
Its President
vice

STATE OF MONTANA)
:
COUNTY OF Lewis & Clark)

On this 16th day of June, 1956, before me, C. E. Pew, a Notary Public in and for the State of Montana, personally appeared GIL C. HOLSHUE and ANNE HOLSHUE, his wife, and D. A. DuBOIS AND CATHERINE DuBOIS, his wife, known to me to be the persons whose names are subscribed to the within instrument, and acknowledged to me that they executed the same.

IN WITNESS WHEREOF, I have hereunto set my hand and affixed my Notarial Seal the day and year in this certificate first above written.

OFFICIAL FILE COPY
DMEA
RECEIVED APR 22 1957
DATE | INITIALS | CODE

C. E. Pew
Notary Public for the State of Montana
Residing at Helena, Montana
My Commission expires Sept. 30, 1956

(NOTARIAL SEAL)

74669

RECORDER'S OFFICE,

STATE OF MONTANA, }
County of Jefferson. } ss.

I hereby certify that the within instrument was filed for record this 17 day of October, A. D., 1956, at 2:35 o'clock P. M., and recorded in Book 8 of Misc., on page 513.

Alta M. Dawson
County Recorder

RECORDED _____
INDEXED A.M.D.
COMPARED _____

By _____ Deputy
Fee, $10.00

OFFICE OF COUNTY CLERK AND RECORDER

STATE OF MONTANA }
COUNTY OF JEFFERSON } ss.

I, Alta M. Dawson, County Clerk and Ex-Officio Recorder in and for said County and State, DO HEREBY CERTIFY, That the above and foregoing which is attached is a true, full and correct copy of "LEASE" as found on record in Book 8 of Miscellaneous Records, on Pages 513-522, Inc., Records of said County.

In Witness Whereif, I hereunto affix my hand and the seal of said County this 26 day of February, 1957.

By Alta M. Dawson
County Clerk and Ex-Officio Recorder.

_____
Deputy.

MF-103
(Revised April 1952)

UNITED STATES DEPARTMENT OF THE INTERIOR
DEFENSE MINERALS EXPLORATION ADMINISTRATION

Form Approved.
Budget Bureau No. 42-R1035.2.

RECEIVED by hand APR 18 1957 U. S. G. S. SPOKANE, WASH.

APPLICATION FOR AID IN AN EXPLORATION PROJECT, PURSUANT TO DMEA ORDER 1, UNDER THE DEFENSE PRODUCTION ACT OF 1950, AS AMENDED

Not to be filled in by applicant

Docket No. 4732
Metal or Mineral LEAD-ZINC-COPPER
Date Received 4-22-57
Estimated Cost $ 81,480.71
Participation (Government %)

RECEIVED APR 22 1957 D.M.E.A.

INSTRUCTIONS

1. *Name of applicant.*—(*a*) State here your full legal name, in the form in which you will wish to contract, and your mailing address: Not Applicable

(*b*) If other than an individual, add to your name above whether a corporation, partnership, etc., and the name of the State in which incorporated or otherwise organized. Refer to supplementary report.

(*c*) If a corporation, add to above statement, titles, names and addresses of officers. Refer to Supplementary Report.

(*d*) If a partnership, add to the above statement the names and addresses of all partners.

2. *General.*—Read DMEA Order 1, "Government Aid in Defense Exploration Projects," before completing this application. Submit this application and all accompanying papers in quadruplicate (four copies), with your name and address on each sheet of the application and on all accompanying papers. Where sufficient space is not provided on the form for all required information, state it on an accompanying paper, with a reference in each case to the instruction to which it refers by number. Comply with all applicable instructions; or, if not applicable, so state. File the application with Defense Minerals Exploration Administration, Department of the Interior, Washington 25, D. C., or with the nearest field executive officer thereof.

3. *Applicant's property rights.*—(*a*) State the legal description of the land upon which you wish to explore, including all land which you possess or control that may be benefited by the exploration, and excluding any land or interest in land which is not to be included in the exploration project contract Refer to Supplementary Report

(*b*) State any mine name by which the property is known. Morning Mine, Jefferson County, Montana

(*c*) State your interest in the land, whether owner, lessee, purchaser under contract, or otherwise Western America of Montana, Inc. is lessee of Morning-Midnight property.

(*d*) If you are not the owner, submit with this application a copy of the lease, contract, or other document under which you control the property. Certified copy of lease is enclosed.

(*e*) If you own the land, describe any liens or encumbrances on it Not Applicable

(*f*) If the land consists of unpatented claims, add to the description above, the book and page numbers for each recorded location notice. Refer to Supplementary Report.

4. *Physical description.*—(*a*) Describe in detail any mining or exploration operations which have been or now are being conducted upon the land, including existing mine workings and production facilities. State your interest, if any, in such operations. Also describe accessibility of mine workings for examination purposes. Refer to Supplementary Report and engineering report.

(*b*) State past and current production, and ore reserves, if any, giving quantities and grades.

(*c*) Describe the geologic features of the property, including mineralization, type of deposit (vein, bedded, etc.), and your reasons for wishing to explore. Illustrate with maps or sketches. Send with your application (but not necessarily as a part of it) any geologic or engineering report, assay maps, or other technologic information you may have, indicating on each whether you require its return to you.

(*d*) State the facts with respect to the accessibility of the project: Access roads, distances to shipping, supply and residence points.

(*e*) State the availability of manpower, materials, supplies, equipment, water, and power.

5. *The exploration project.*—(*a*) State the mineral or minerals for which you wish to explore We wish to explore for lead, zinc, and copper.

(*b*) Describe fully the proposed work, including a map or sketch of the property showing a plan (and cross sections if needed) of any present mine workings, and the location of the proposed exploration work as related to such features as contacts, veins, ore-bearing beds, etc. Refer to enclosed engineering report.

(*c*) The work will start within 6 days and be completed within 9 months from the date of an exploration project contract.

(*d*) State the operating experience and background of the applicant with relation to the ability to carry out such exploration project, and also that of the person or persons who will supervise the operations Refer to Supplementary Report.

6. *Estimate of costs.*—Furnish a detailed estimate of the costs of the proposed work (you will have to use a separate sheet), under the following headings. Add the totals under all headings to give the estimated total cost of the project:

(*a*) *Independent contracts.*—(Note.—If the applicant does not intend to let any of the work to contractors, write "none" after this item. To the extent that the work is to be contracted, do not repeat the cost of the contract-work in subsequent items.) State the cost of any proposed independent contracts for the performance of all or any part of the work, expressed in terms of units of work (such as per foot of drilling, per foot of drifting, per hour of bulldozer operations, per cubic yard of material moved, etc.).

(*b*) *Labor, supervision, consultants.*—Include an itemized schedule of numbers, classes and rates of wages, salaries or fees for necessary labor, supervision and engineering and geological consultants.

(*c*) *Operating materials and supplies.*—Furnish an itemized list, including items of equipment costing less than $50 each, and power, water and fuel.

(*d*) *Operating equipment.*—Furnish an itemized list of any operating equipment to be rented, purchased, or which is owned and will be furnished by the Operator, with the estimated rental, purchase price, or suggested use-allowance based on present value, as the case may be.

(*e*) *Rehabilitation and repairs.*—Furnish a detailed list showing the cost of any necessary initial rehabilitation or repairs of existing buildings, installations, fixtures, and movable operating equipment, now owned by the Operator and which will be devoted to the exploration project.

(*f*) *New buildings, improvements, installations.*—Furnish a detailed list showing the cost of any necessary buildings, fixed improvements, or installations to be purchased, installed or constructed for the benefit of the exploration project.

(*g*) *Miscellaneous.*—Furnish a detailed list showing the cost of repairs to and maintenance of operating equipment (not including initial rehabilitation or repairs of the Operator's equipment), analytical work, accounting, workmen's compensation and employers' liability insurance, and payroll taxes.

(*h*) *Contingencies.*—Give an estimate of any necessary allowances for contingencies not included in the costs stated above.

NOTE.—No items of general overhead, corporate management, interest, taxes (other than payroll and sales taxes), or any other indirect costs, or work performed or costs incurred before the date of the contract, should be included in the estimate of costs.

7. (*a*) Are you prepared to furnish your share of the cost of the proposed project in accordance with the regulations on Government participation (Sec. 7, DMEA No. 1)? Yes

(*b*) How do you propose to furnish your share of the costs?

[x] Money [ ] Use of equipment owned by you [ ] Other

Explain in detail on acompanying paper.

CERTIFICATION

The undersigned, whether as an individual, corporate officer, partner, or otherwise, both in his own behalf and acting for the applicant, certifies that the information set forth in this form and accompanying papers is correct and complete, to the best of his knowledge and belief.

Dated April 18, 1957

Western America of Montana, Inc.
(Applicant)

By W Leonard Press
Ed Wheadle - Secretary

Title 18, U. S. Code (Crimes), Section 1001, makes it a criminal offense to make a willfully false statement or representation to any department or agency of the United States as to any matter within its jurisdiction.

U. S. GOVERNMENT PRINTING OFFICE 16—66551-1

APPLICATION FOR AID IN AN EXPLORATION PROJECT, PURSUANT TO DMEA ORDER 1, UNDER THE DEFENSE PRODUCTION ACT OF 1950, AS AMENDED

Supplementary Data for Form MF-103 (Indexed to instruction numbers)

---

1. Name of Applicant

(a) Not applicable

(b) Western American of Montana, Inc. (Incorporated in State of Montana)
P. O. Box 782
Helena, Montana

(Above company is a subsidiary of Alscope Explorations, Ltd.; 10009 Jasper Avenue, Edmonton, Alberta, Canada, and County Bank Building, Passaic, New Jersey.)

(c) Names and addresses of corporation officers:

Western American of Montana, Inc.

President, Mr. T. V. Leonard
917 N. Park (also P. O. Box 782, Helena, Montana)
Helena, Montana

Vice-President, Mr. J. L. Wilson
13615 - 100th Avenue
Edmonton, Alberta, Canada

Sec.-Treasurer, Mr. E. K. Cheadle
P. O. Box 963
Billings, Montana

Alscope Explorations, Ltd. (Parent Company)

President, Mr. Nicholas Martini
County Bank Building
Passaic, New Jersey

Vice-President, Mr. J. L. Wilson
13615 - 100th Avenue
Edmonton, Alberta, Canada

Treasurer, Mr. Sol Entin
25 Ridge Avenue
Passaic, New Jersey

OFFICIAL FILE COPY
DMEA
RECEIVED APR 22 1957

DATE	INITIALS	CODE

(d) Not applicable

2. No information required

3. Applicant's Property Rights

(a) Legal Description of Land to be Explored

Patented Lode Claims (Morning-Midnight Group) sections 7, 17, and 18
T. 7 N., R. 5 W.,
Jefferson County, Montana

Patent Record:

Morning (U. S. Survey No. 8518); Book I, page 257.
Midnight (U. S. Survey No. 8519); Book I, page 257.

Deed Record:

G. C. Holshue; Book No. 70, page 368.
D. A. Dubois; Book No. 69, page 61.

3. Applicant's Property Right (Continued)

Claims upon which actual work will be undertaken:

Sinking Project (Recommended Plan)--Midnight Claim (8519)
Crosscut Project (Alternate Plan)---Unpatented claim (Book 48, page 591, Cindy No. 2; or on ground not yet located) for proposed tunnel site; work designed to penetrate under Midnight Claim (8519).

(None of Proposed Exploration Project is to be accomplished on Morning Claim (8518).

Additional information regarding the description of the land to be explored can be found in the enclosed lease. Also, the enclosed engineering report can be referred to for maps pertinent to the proposed exploration project.

(b) Morning Mine, or Morning-Midnight Property, Jefferson County, Montana

(c) Western America of Montana, Inc. (was Western America Uranium Exploration Corporation) is lessee of Morning-Midnight Property.

(d) Certified copy of lease is enclosed.

(e) Not applicable

(f) If alternate project (Crosscut) is accepted, tunnel site will be on Cindy No. 2 (Book 48, page 591, Quartz Location Record, Jefferson County Courthouse, Boulder, Montana), or on ground as yet not located. The recommended Sinking Project will all be accomplished on one claim, the Midnight (Patent No. 8519).

4. Physical Properties

(a) Refer to enclosed engineering report. All recent surface cuts, and major underground workings are accessible for examination purposes. The workings penetrating the near surface parts of the shear zone are caved and inaccessible.

(b) Refer to enclosed engineering report.

(c) Refer to enclosed engineering report.

(d) Refer to enclosed engineering report.

(e) Refer to enclosed engineering report.

OFFICIAL FILE COPY
DMEA
RECEIVED APR 22 1957

DATE	INITIALS	CODE

5. The Exploration Project

(a) It is our wish to explore for lead, zinc and copper.

(b) Refer to enclosed engineering report.

(c) The proposed work would start within one week of the date of an exploration project contract, and would be completed within 9 months of that date. Should the project start on or about May 1, 1957, it would be completed by January 31, 1958. However, in view of the remoteness of the property, and of possible inclement weather conditions during the proposed Stage II of the Project, the operation could extend into the Spring and early Summer of 1958.

(d) The applicant (Western America of Montana, Inc. was Western America Uranium Exploration Corporation) has been actively engaged in mining exploration for approximately two years; has successfully completed one other government contract (Docket No. DMEA 3303, Contract No. E799; White Pine Mine, Jefferson County, Montana; Uranium Exploratory); has almost all of the necessary mining equipment for the successful completion of the project presently on hand; and employs capable technical personnel to act in supervisory capacity.

Mr. T. V. Leonard, President of Western America of Montana, Inc., has been associated with company operations for two years. He has knowledge of construction practice, and has personnel-management experience.

Mr. Richard N. Miller graduated from Montana School of Mines in 1954, where he received Bachelor of Science and Master of Science degrees in Geological Engineering. Mr. Miller has been associated with the company in an engineering-geology capacity for two years. He has acted in technical supervisory positions, is familiar with the preliminary exploration project recently completed by Western America of Montana, Inc. on the Morning-Midnight property, and has prepared the enclosed engineering report on the property.

6. Estimate of Costs (Recommended Project and Alternate Project)

Individual Costs and Costs/Foot of Major Expense Items (Basis for Detailed Cost Estimate of Recommended Project and Alternate Project--Indexed to Subheadings Under Estimate of Costs, Form MF-103)

Independent Contracts (none)

Labor, Supervision, and Consultants

Labor, Days Pay Scale: Miner, $22.50/day or $2.812/hour
Non-miner, $18.00/day or $2.25/hour
Truckdriver, $18.00/day or $2.25/hour
Bull-dozer Operator, $22.00/day or $2.75/hour

Labor, Contract Scale, Miners Only:

1. Sinking,	$70.00/foot of advance
2. Drifting from Winze Level	$20.00/foot of advance
3. Crosscutting from Winze Level,	$20.00/foot of advance
4. Crosscut Tunneling,	$15.00/foot of advance
5. Drifting and Crosscutting from Portal level,	$15.00/foot of advance
6. Raising,	$18.00/foot of advance
7. Drifting and Crosscutting from Raise Level,	$19.00/foot of advance

Technical Supervision, Geological Engineer, $25.00/day

Operating Materials and Supplies

Explosives; $11.975/50#; 50#/average round; or $11.975/round.

Detonating Caps; $22.50/1000; or $0.0225 ea. w/o waterproofing; $0.025 w/ waterproofing; 18/average round; or $0.45/round.

Fuse; $48.00/3000'; $16.00/1000'; $0.016/ft.; 10'/hole for a 18 hole round; 180'/round @ $0.016/ft.; or $2.28/round.

Electric Delay Caps; average cost $0.30 ea.; 18, average round; or $5.40/round

Connecting Wire, Electric Blasting (in winze only) $1.15/150 feet; or $0.0077/foot; (use 12 feet/round in winze); or $0.092/round

Lead Wire, Blasting Circuit; $6.90/100 feet; or $0.069/foot

Mine Timber, Squared; (Laid into Mine Yard) $75.00/1000 brd. ft.

Ladders, Wedges, Scrap Timber for Blocking, and Spikes;
all Headings . . . . . $0.05/foot of advance

Hanging Rods, Nuts, and Washers (Winze Only)

3/8" rod; $0.30/#; 25'/5' round in winze; 5'/foot of advance in winze; or . . . . . $0.56/foot of advance

3/8" nuts; $0.02 ea.; required, 8/set of winze timber; or $0.16/round; or . . . . . $0.032/foot of advance

3/8" washers; $0.30/#, or approx. $0.01 ea.; 8/set of timber; or $0.08/round; or . . . . . $0.016/foot of advance

Cost of Hanging Rods, etc. $0.598/foot of advance
or $0.60/foot of advance

2" black pipe (for air line and sump pump discharge line)
$56.07/100 feet; or $0.56/foot

2" sleaves (for joining 2" pipe) $0.60 ea.; 1/20'
joint of pipe; or $0.03/foot

8" metal ventilation pipe (in 10' joints) $0.80/foot

1-1/4" plastic water line $0.26/foot

25# mine rail, in 1 ton lots; $11.25/100# (25#/yard);
$0.94/foot; or $1.88/foot of track . . . $1.88/foot of track

Mine Track Switch points, 25# rail . . . . $15.00 ea.

Track Splices, 25# rail; $0.61/pair; $1.22/15 feet
of track; or . . . . . $0.081/foot of advance

Track Bolts, Nuts, and Track Spikes; . . . $0.05/foot of advance

Ties, Mine Track, 4 x 4 x 4' long; 1/5' of
track; . . . . . $0.08/foot of advance

Fuel and Oil (Bulk Prices)

Diesel Fuel (delivered to mine yard). $0.185/gallon
Gasoline, Regular (delivered to mine
yard) $0.307/gallon
Heavy Duty Lube Oil, Diesel Motor
$1.15/gallon in 5 gallon or greater
lots $0.288/quart
Heavy Duty Lube Oil, Air Compressor
$1.05/gallon in 5 gallon or greater
lots $0.262/quart
Heavy Duty Lube Oil, Gasoline Engine
$1.10/gallon in 5 gallon or greater
lots $0.275/quart

Add vehicle Daily Weekly and Job rate
Est. Fuel and Oil Consumption

Mine-Power Equipment, Fuel and Oil Consumption Rates

500 cfm GD Air Compressor

Sinking Project, Stage I, Phase IA and 1B

(Operating only mucking machine and rock-drill)

Estimated Operating Time—10 hours (total)

Fuel Consumption Rate--5 gallon/hour

Fuel consumed in 10 hours--50 gallons
@ $0.185/gallon $9.250

Oil Consumption

Diesel Motor: Est. 1 qt. @ $0.288 . . . $0.288
Air Comp: Est. 1 qt. @ $0.262 . . . . . $0.262
$9.80/Phase 1A and 1B

All Other Phase Sinking Project

(Operating pumps, rock-drills, ventilation fan, mucking machine, and air tugger)

Estimated Operating Time/Day (two shifts)--20 hours/day

Day Shift -- 9 hours
Between Shifts (vent. and pumping) -- 3 hours
Night Shift -- 8 hours

Fuel Consumption Rate--7 gallons/hour

Fuel consumed in 20 hours--140 gallons
@ $0.185/gallon $25.90

Oil Consumption

Diesel Motor: Est. 1 qt./shift; 2 qts./day
@ $0.288/qt. . . . . $ 0.576
Air Comp: Est. 1 qt./shift; 2 qts./day
@ $0.262/qt. . . . . $ 0.524
$27.00/day

Crosscut Project (Alternate Plan)

Stage I, Phases II, III, and IV (Not used Phase I); and Stage II, Phases III and IV

(Operating rock-drill, mucking machine, and ventilation fan)

Operating Time/Day (two shifts)--13 hours

Day Shift -- 5 hours
Between Shifts (ventilation) -- 3 hours
Night Shift -- 5 hours

Fuel Consumption Rate--5 gallons/hour

Fuel consumed in 13 hours--65 gallons
@ $0.185 gallon $12.025

Oil Consumption

Diesel Motor: Est. 1 qt./day . . . . . $ 0.288
Air Comp: Est. 1 qt./day . . . . . $ 0.262
$12.575/day

Stage II, Phases I and II

(Operating rock-drill, air tugger, and ventilation fan)

Operating Time/day (two shifts)--9 hours

Day Shift -- 3 hours
Between Shifts (ventilation) -- 3 hours
Night Shift -- 3 hours

Fuel Consumption Rate--4 gallons/hour

Fuel consumed in 9 hours--36 gallons
@ $0.185/gallon $6.660

Oil Consumption

Diesel Motor: Est. 1 qt./day $0.288
Air Comp: Est. 1 qt./day $0.262
$7.21/day

12 1/2 KVA Generator

Sinking Project

Stage I, Phase IA and IB only

(Charging Trammer)

Estimated Operating Time/Day--2 hours
for 4 days--8 hours (total)

Fuel Consumption Rate--3 gallons/hour
or 24 gallons (total) @ $0.307/gallon
. . . . . $7.368

Oil Consumption--Est. 1 qt. for 8 hour
running period @
$0.275/qt. $0.275
$7.643/phase
IA and IB

All Other Phases of Either Project

(Charging Trammer, blasting (sinking project only),
electricity for mine yard (night shift)).

Operating Time/Day--10 hours

Day Shift --- 2 hours
Night Shift - 8 hours

Fuel Consumption Rate--3 gallons/hour
or 30 gallons/day @ $0.307/gallon . $9.210

Oil Consumption--Est. 1 qt./day . . . $0.275
$9.485/day

Vehicle Fuel and Oil Consumption, Daily and Weekly Rates

1955, Willys Jeep Station Wagon

(Calculation for both proposed Projects, all Phases)

1 round trip/day from Basin, Montana to Property
and return--24 miles

Fuel Consumption (Off Highway)--6 miles/gallon;
or 4 gallons/day @ $0.307/gallon . . . $1.228

Oil Consumption (Off Highway)--1/2 qt./day
@ $0.275/qt. $0.137
Estimated Daily Cost $1.365/day
or $8.190/6 day week

1948, Willys Jeep Pick-Up

Sinking Project

Stage I, Phase IA and IB (1 week)

1 trip to mine/day and return to Basin, Montana, at same rate as for Jeep Station Wagon $1.365/day or $8.190/week

Crosscut Project (Alternate Plan)

Stage I, Phase I

(Same daily and weekly rate as above)

All Other Phases of Either Project

2 trips to mine/day and return to Basin, Montana, a distance of 48 miles.

Fuel Consumption (Off Highway)--6 miles/gallon; or 8 gallons/day @ $0.307/gallon . . . $2.456

Oil Consumption (Off Highway)--1 qt./day @ $0.275/qt. $0.275

Estimated Daily Cost $2.73/day or $16.38/week

1953, F600 Ford Dump Truck

Sinking Project

Stage I, Phase IA and IB (1 week)

2 trips to Butte, Montana, after pipe, powder, and other supplies; 96 miles round trip; or 192 miles.

Average Fuel Consumption (On and Off Highway) 8 miles/gallon, or 24 gallons @ $0.307/gallon $7.368

Oil Consumption; Est. 3 qts. @ $0.275/qt., or $0.825

Estimated Cost Phase IA and IB, Sinking Project $8.193

Crosscut Project (Alternate Plan)

Stage I, Phase I (2 weeks or 12 days)

(Estimated Usage--6 days)

Fuel Consumption: 8 miles/gallon (On and Off Highway)

2 days:

2 trips to Helena and/or Butte, Montana, for mining materials and supplies; and return; estimated distance 132 miles (total); or 16.6 gallons @ $0.307/gallon . . . $5.10

4 days (general haulage)

Average distance traveled--5 miles/day; @ 8 miles/gallon; 0.60 gallon/day @ $0.307/gallon or $0.18/day x 4 . . $0.72

Est. 1 qt. motor oil/6 day work period $0.275

Estimated Cost Phase I, Stage I, Crosscut Project (Alternate Plan) $6.095

All Other Phases of Either Project

1 trip/week after mining materials and supplies; average distance property to Butte or Helena, Montana, and return--90 miles; plus general haulage, mine yard, etc.--5 miles/week; distance traveled/week--95 miles or 15.8 miles/day (average)

15.8 miles/day @ 8 miles/gallon (On and Off Highway) or 1.97 gallons/day @ $0.307/gallon $0.600

Oil Consumption; est. 1 qt./week @ $0.275, or $0.046/day $0.046
Estimated Daily Cost $0.646/day
or $3.906/week

IH, K-11, Tractor (Winch Truck)

Stage I, Phase I, Crosscut Project (Alternate Plan) Only

(Estimated Usage--8 days)

2 days moving heavy equipment; 6 days utilized as winch-truck

Moving Heavy Equipment

Average fuel consumption on and off highway--5 miles/gallon; 1 trip Helena, Montana to property--50 miles; or 10 gallons @ $0.307/gallon $3.07

Oil Consumption: Est. 1 qt. $0.275
$3.345

Winch-Truck

Estimated travel, 5 miles/day @ 5 miles/gallon; or 1 gallon/day moving; also est. 2 gallons/day operating winch; total 3 gallons/day x 6 days or 18 gallons @ $0.307/gallon $5.53

When Utilized as Winch-Truck (6 days)

Oil Consumption; Est. 1 qt. for 6 day period $0.275
$5.805

Estimated Cost:

Moving Heavy Equipment $3.345
Utilized as Winch-Truck $5.805
Estimated Cost Phase I, Stage I, Crosscut Project (Alternate Plan) $9.150

D-7 Caterpillar Tractor

Stage I, Phase I, Crosscut Project Only (Alternate Plan)

(Estimated Usage--6 days; building access road, and preparing mine yard (275-level))

Estimated fuel consumption--5 gallons/hour; for an 8-hour day--40 gallons/day; for 6 days--240 gallons @ $0.185/gallon . . $44.40

Oil Consumption; Est. 3 qts./6 day week, @ $0.288/qt. . . . . $ 0.86
Estimated Cost, Phase I, Stage I, Crosscut Project (Alternate Plan) $45.26

Operating Equipment (Use Allowance, Insurance, and Maintenance-Repair Allowance)

List of Equipment for Monthly Depreciation Calculation
(Calculation based on Equipment Depreciation Over a 5 year period; 60 months; 1/60 of present value/month.)

Item	Present Value	Monthly Deprec.
1955, 4 WD, Willys Jeep Station Wagon	$1,940.00	$ 32.33
1948, 4 WD, 1 Ton, Willys Jeep Pick-Up	$ 400.00	$ 6.67
1953, F600, 2 Ton, Ford Dump Truck	$2,000.00	$ 33.33
1946, International, K-11, Tandem Drive Truck, w/ 5th wheel, winch, and boom (42,000 gross)	$2,500.00	$ 41.67
1946, Olson Lowboy Tandem Wheel Semi Trailer (32,000 gross)	$1,650.00	$ 25.83
D-7 Caterpillar Tractor, w/ Laplant Choate Hyd. Angle Dozer	$11,000.00	$183.33
Field House Trailer, 8' x 26'	$ 850.00	$ 14.17
Gardner-Denver Portable Air Compressor, 500 cfm, diesel power	$6,500.00	$108.33
* Electric Generating Plant, 12 1/2 KVA, 3 phase, 240 volt; driven by F-227 Continental Engine	$1,350.00	$ 22.50
Herther Motor-Generator battery charger set and control panel	$ 250.00	$ 4.16
Mancha Trammer, 1 1/2 ton, battery locomotive	$3,950.00	$ 65.80
EIMCO Mucking Machine, model 12B	$2,000.00	$ 33.33
4 Mine Cars, BB, End Dump, 1 ton; $150.00 ea.	$ 600.00	$ 10.00
6 Mine Cars, BB, Side Dump, 2 ton; $250.00 ea.	$1,500.00	$ 25.00
1 Thor Airleg, model 380	$ 500.00	$ 8.32
* 1 Thor Airleg, model 390; w/ model 680 telescopic feed leg	$ 885.00	$ 14.75
Drill Steel (Various lengths on hand)		?
* 4 Gardner-Denver Pneumatic Sump Pumps, model VP4; $395.00 ea.	$1,580.00	$ 26.33
Fan, Sturtevant, Silentvane, Size 75, Design 7, (to be converted to compressed air)	$ 750.00	$ 12.50
Strunk Chain Saw	$ 275.00	$ 4.58
Water Pump, Portable, w/ gasoline motor	$ 135.00	$ 2.25

List of Equipment for Monthly Depreciation Calculation (Continued)

Item	Present Value	Monthly Deprec.
* Sinking Bucket, 1/2 ton capacity	$ 100.00	$ 1.67
Gardner-Denver Air Tugger	$ 275.00	$ 4.58
Air Receiver, horizontal	$ 90.00	(Not Depreciated)
Water Receiver, horizontal	$ 50.00	(Not Depreciated)

* Note: Items to be purchased by Western America of Montana, Inc.

Insurance on Equipment

Mining Equipment
(Scheduled Property Floater Policy, North British Mercantile Insurance Company, Ltd., T. B. Miller Agency, Helena, Montana)

Mining Equipment insured for three years:

Yearly premium for the period December 9, 1956 to December 9, 1957; $327.50/year; $27.29/month; or $6.298/week.

Yearly premium for the period December 9, 1957 to December 9, 1958; $247.50/year; $20.475/month; or $4.725/week.

Vehicles
(Comprehensive Liability Policy; Firemans Fund Indemnity Company, T. B. Miller Agency, Helena, Montana)

Insurance covers 6 vehicles:

Yearly premium; $424.81
Monthly rate; $ 35.40
Weekly rate; $ 8.85

Depending on Project, Stage, and Phase, either three or five vehicles in use.

Sinking Project (Recommended Plan)

3 vehicles chargeable to for duration of entire project, or $4.43/week

Crosscut Project (Alternate Plan)

5 vehicles chargeable during Phase I of Stage I, or $7.65/week

All other Phases of Project $4.43/week

Maintenance and Repair Allowance (Minor Maintenance and Repair of all Mining Equipment and Vehicles in Use)

(Estimated 2.5% of total cost of project)

Rehabilitation and Repair

General rehabilitation of access crosscut and drift from portal to winze site, including cleaning out of drainage ditch $0.50/foot

New Buildings, Improvements, and Installations

1. Excavate for and pour concrete foundation for ventilation fan and enclosure; estimated cost . . . $25.00

2. Erect new building to house trammer, generator, and charging panel, and to be utilized for a tool-house (Crosscut Project, Alternate Plan only); estimated cost $100.00

Miscellaneous Expenditures (Industrial Accident Insurance, Payroll Taxes, Unemployment Compensation, and Analytical Work)

Industrial Accident Insurance

Miner; 8.0% of wages
Non Miner; 4.8% of wages
Geol. Engn; 8.0% of salary

Payroll Taxes

2.25% of first $4,200.00 of individuals wages

Unemployment Compensation

2.7% of total payroll for project

Analytical Work (Assays for lead, zinc, and copper)

Price quoted by Goodall Bros. Assay Office, Helena, Montana: 1 assay for lead, zinc, and copper . . . . . $4.50 ea.

Contingencies

1. Major Repair Items
2. Increased cost of keeping mine drained by pumping (Sinking Project Only)

Detailed Cost Estimates for Proposed Exploration Project

Sinking Project (Recommended for reasons given in enclosed Engineering Report)

Stage I

Phase IA and IB

Work Description

Phase IA

Subphase

1. Move all necessary mining equipment onto 75-level mine yard from either Helena, Montana, or Butte, Montana.

2. Excavate for and pour concrete foundation for ventilation fan and enclosure.

3. Plumb 500 cf portable air compressor to air receiver tank already on premises.

4. Install electric generator and charging panel for Mancha trammer in enclosure already on premises.

5. Install ventilation fan, plumb to air source, and equip for blowing and for suction; cover with fan-house.

6. Move onto property sufficient mining materials and supplies to begin sinking operation.

Work Description (Continued)

Phase IB

Subphase

1. General cleanup of 320 feet of access adit and drift, and maintenance of drainage ditch.

2. Install 320 feet of 8" metal ventilation pipe; pipe in 10 foot joints; joints taped.

3. Install 320 feet of blasting circuit (blasting lead wire).

4. Remove back-lagging, and part of side-lagging over winze site (vicinity of survey station 8 on 75-level).

5. Drive single-compartment raise 12 feet (two rounds), and timber (6' x 10' x 12'--720 cu. ft.) (75-level underground dumping facility; refer to Appendix A)

6. Erect sheave wheel, and construct chute or chutes.

7. Blast for air tugger space on hanging wall side of drift (5' x 5' x 2.5'--52.5 cu. ft.; refer to Appendix A)

8. Mount air tugger and plumb to 2" airline.

9. Install sinking bucket skids and dumping apparatus.

Note: Other than general cleanup, 75-level is accessible and contains rail, airline, and waterline.

Time Required

Phase IA and IB undertaken at same time (1 week required for all Phase I work) (6 days, 1 shift/day)

Labor Force

Phase IA

1 Truckdriver	(Miner all other project phases)
1 Swamper	(Miner all other project phases)
1 General Workman	(Miner all other project phases)

Phase IB

3 Miners
1 Non Miner (Outside Man)

Total Labor Force - - - - - - - - 7 men on payroll.

Detailed Estimate of Costs (Indexed to Subheading under Estimate of Costs, Form MF-103)

Independent Contracts . . . . . $ 0.00

Labor, Supervision, and Consultants

Phase IA:

Labor; Truckdriver, Swamper, and General Workman; 3 men @ $18.00/day ea. for 6 days $324.00

Phase IB:

Labor, Days pay; 3 miners @ $22.50/day for 6 days $405.00

Detailed Estimate of Costs (Continued)

Labor, Days pay; Non Miner @ $18.00/day for 6 days $108.00

Total wages Phase IA and IB, Stage I, Sinking Project $837.00

Operating Materials and Supplies

Phase IA

Cost of miscellaneous unions and connections for 2" airline, 8" ventilation pipe, and electrical hook-up for generator and blasting circuit . . $ 25.00

Phase IB

Explosives; 2 1/2 rounds, or 125 #; @ $11.975/50# . . . . . $ 29.94

Blasting Caps, 18/round for 2 1/2 rounds; (no waterproofing) $0.0225 ea. . . . . $ 1.01

Fuse, 18 hole round--10'/hole; 180 feet @ $0.016/foot for 2 1/2 rounds . . . . . $ 7.20

Mine Timber/6' round in single compartment (6' x 10') raise:

6 posts (6 x 6) 5'-6" long - - - - 99 board feet
2 side plates (6 x 6) 9'-0" long - 54 board feet
2 end plates (6 x 6) 4'-0" long - 24 board feet
Lagging;
Back of Raise, 10 (3 x 12) 4'-3" long - 127.50 brd. ft.
Walls of Raise, 20 (2 x 12) 4'-3" long - 170.00 brd. ft.
Sides of Raise, 10 (2 x 12) 4'-3" long - 90.00 brd. ft.
564.40 brd. ft.

Squared timber, $75.00/1000 brd. ft.

Two sets in raise including chutes, winze skids, etc. . . . . $ 84.66

Ventilation pipe, metal, 8"; 320 feet @ $0.80/foot $256.00

Blasting Circuit, Lead Wire; 320 feet @ $0.069/foot . . . . . $ 22.08

Fuel and Oil

Mine-Power Equipment

500 cfm GD Air Compressor

Fuel Consumption: 50 gallons @ $0.185/gallon (diesel fuel) . . . . . $ 9.25

Oil Consumption: . . . . . $ 0.55

12 1/2 KVA Generator

Fuel Consumption: 24 gallons @ $0.307/gallon (gasoline) . . . . . $ 7.368

Oil Consumption: . . . . . $ 0.275

Operating Materials and Supplies (Continued)

Vehicles

1955, Jeep Station Wagon 1 week, 6 days @ $1.365/day	$ 8.190
1948, Jeep Pick-Up 1 week, 6 days @ $1.365/day	$ 8.190
1953, F600 Ford Dump Truck 1 week, 6 days @ $8.193	$ 8.193
Estimated Cost, Operating Materials and Supplies, Phases IA and IB, Stage I, Sinking Project	$467.90

Operating Equipment (Use-Allowance, Insurance, and Maintenance-Repair Allowance)

Use-Allowance Calculation

Equipment in Use	Monthly Deprec.	Use Period	1 week Use-Allowance
Jeep Station Wagon	$ 32.33	1 week	$ 8.08
Jeep Pick-Up	$ 6.67	1 week	$ 1.67
Ford Dump Truck	$ 33.33	1 week	$ 8.33
GD Air Compressor	$108.33	3 days	$13.54
Generating Plant	$ 22.50	1 week	$ 5.62
Mancha Trammer	$ 65.80	1 week	$16.45
Battery Charger	$ 4.16	1 week	$ 1.04
Mucking Machine	$ 33.33	2 days	$ 2.78
4 mine cars, end dump	$ 10.00	1 week	$ 2.50
Thor Airleg (used)	$ 8.32	2 days	$ 0.69
Strunk Chain Saw	$ 4.58	1 week	$ 1.15
			$61.85

Insurance on Equipment

Mining Equipment; $6.298/week	$ 6.298
Vehicles (3); $4.43/week	$ 4.43
	$10.73

Maintenance-Repair Allowance

Estimated 2.5% of Total Cost of Phase IA and IB $1,584.47 x 0.025	$39.61
Estimated Cost, Operating Equipment, Phase IA and IB, Stage I, Sinking Project	$112.19

Rehabilitation and Repair

General cleanup, and preparation for good mine drainage of 320 feet of access adit and drift (portal to winze site) @ $0.50/foot	$160.00
Estimated Cost, Rehabilitation and Repair, Phase IA and IB, Stage I, Sinking Project	$160.00

New Buildings, Improvements, and Installations

Excavate for and pour concrete foundation for ventilation fan (6' x 6')	$ 25.00
Estimated Cost, New Buildings, Improvements and Installations, Phase IA and IB, Stage I, Sinking Project	$ 25.00

Miscellaneous Expenditures (Industrial Accident Insurance, Payroll Taxes, Unemployment Compensation, and Analytical Work)

Industrial Accident Insurance

Phase IA

Truckdriver, swamper, and general workman, outside of mine (4.8%) $324.00 x 0.048 . .	$15.552

Phase IB

3 Miners (8.0%)	$405.00 x 0.08	$32.40
Non Miner (4.8%)	$108.00 x 0.048	$ 5.184
	Estimated cost	$53.136

Payroll Taxes (FICA) (2.25%)

(Total Payroll) $837.00 x 0.0225	$18.832

Unemployment Compensation (2.7%)

(Total Payroll) $837.00 x 0.027	$22.599

Analytical Work (none)	$ 0.00
Estimated Cost, Miscellaneous Expenditures, Phase IA and IB, Stage I, Sinking Project . .	$94.57
Contingencies	?

Cost Summary by Major Cost Categories

Independent Contracts	$ 0.00
Labor, Supervision, and Consultants	837.00
Operating Materials and Supplies	467.90
Operating Equipment	112.19
Rehabilitation and Repair	160.00
New Buildings, Improvements, Installations	25.00
Miscellaneous Expenditures	94.57
Contingencies	?
Estimated Total Cost Phase IA and IB (Preparation of Surface Installation, General Rehabilitation of Access Adit and Drift, and Preparation of 75-level Winze Station), Stage I, Sinking Project	$1,696.66

Phase II

Work Description

Sink 110' of timbered exploratory winze; 6' x 10' outside of timber. Maintain hoisting compartment 4' x 4' in the clear of timber, and manway 3.5' x 4' in the clear of timber. It is proposed, that the winze be driven on the footwall of the shear structure, and that the winze site be as depicted on the preliminary longitudinal section (enclosure, in engineering report). The work (labor) is to be contracted on a footage basis--advance winze heading 15'/week or 2.5'/day (average); on a 6 day work week working two shifts/day. Average round--5'.

Time Required

At the above weekly rate of advance, Phase II will require 8 weeks for completion.

Labor Force

6 miners, 3 men/shift, two shifts/day
1 non miner (outside man), one shift/day (split)
Geological Engineer (part time)
(Total--8 men on payroll; 1 part-time)

Detailed Estimate of Costs, Stage I, Phase II, Sinking Project
(Indexed to Subheadings Under Estimate of Costs, Form MF-103)

Independent Contracts . . . . . $ 0.00

Labor, Supervision and Consultants (Cost/Foot of Advance)

Labor, miners, contracting $70.00

Labor, non miner, days pay; $18.00/day,
(2.5'/day) . . . . . $ 7.20

Technical Supervision, Geological Engineer;
3 days/week for 8 weeks, or 24 days @
$25.00/day . . . . $600.00 / 110' . . . . . $ 5.45

Estimated Cost and Cost/Foot, Wages, Phase II, Stage I or; 110' x $82.65 . . . . . $82.65/foot of advance
$9,092.00

Operating Materials and Supplies (Cost/Foot of Advance)

Explosives; 50#/average round @ $11.975/50#;
5' of advance/round . . . . . $ 2.395

Electric Delay Caps; 18/average round, or
$5.40/round . . . . . $ 1.080

Connecting Wire, Electric Blasting;
$0.092/average round . . . . . $ 0.018

Lead Wire, Blasting Circuit . . . . . $ 0.069

Timber, squared;
(Calculation of board feet required/winze set)

6 posts (6 x 8), 4'-6" long - - - - - - - - - -	108.00 brd. ft.
2 end plates (6 x 8), 4'-2" long - - - - - -	33.36 brd. ft.
2 wall plates (6 x 8), 9'-0" long - - - - - -	72.00 brd. ft.
1 divider (6 x 8), 4'-2" long - - - - - - - -	16.68 brd. ft.
Lagging:	
20 (2 x 12), 4'-6" long - - - - - - - - - - -	180.00 brd. ft.
10 (2 x 12), 4'-0" long - - - - - - - - - - -	80.00 brd. ft.
Timber Chute:	
(sides) 2 (2 x 6), 5'-0" long - - - - - - -	10.00 brd. ft.
(bottom) 1 (2 x 12), 5'-0" long - - - - - -	10.00 brd. ft.
Skids:	
2 (4 x 4), 5'-0" long - - - - - - - - - - - -	13.20 brd. ft.
	523.24 brd. ft.

523.24 brd. ft. @ $75.00/1000;
or $39.243/5 foot set . . . . . $ 7.848/foot of advance

Hanging Rods, Nuts, and Washers . . . . . $ 0.60

Ladders, Wedges, Scrap Timber for Blocking,
Spikes, etc. . . . . $ 0.05

2" Pipe, Airline . . . . . $ 0.56
2" Pipe, Sump Pump Discharge Line . . . . . $ 0.56
2" Sleaves, Airline . . . . . $ 0.03
2" Sleaves, Discharge Line . . . . . $ 0.03
8" Ventilation Pipe, metal . . . . . $ 0.80
1 1/4" Waterline, plastic . . . . . $ 0.26

Fuel and Oil

Mine Power Equipment

Operating Materials and Supplies (Continued)

500 cfm GD Air Compressor

Fuel Consumption; $25.90/day, (2.5' of advance/day) $10.37

Oil Consumption; $1.10/day, (2.5' of advance/day) . . . . . $ 0.44

12 1/2 KVA Generator

Fuel Consumption; $9.21/day, (2.5' of advance/day) . . . . . $ 3.68

Oil Consumption; $0.275/day, (2.5' of advance/day) . . . . . $ 0.11

Vehicles

1955, Jeep Station Wagon, $1.365/day (2.5' of advance/day) . . . . $ 0.546

1948, Jeep Pick-Up, $2.730/day (2.5' of advance/day) . . . . $ 1.091

1953, F600 Ford Dump Truck, $0.646/day (2.5' of advance/day) . . . . $ 0.260

Estimated Cost and Cost/Foot, Operating Materials and Supplies, Stage I, Phase II, Sinking Project . . . . . $30.80/foot of advance

110' @ $30.80/foot $3,388.00

Operating Equipment (Use-Allowance, Insurance, and Maintenance-Repair Allowance)

Use-Allowance Calculation (based on 8 week period)

Equipment in Use	Monthly Deprec.	8 week Use-Allowance
Jeep Station Wagon	$ 32.33	$ 64.66
Jeep Pick-Up	6.67	13.34
Ford Dump Truck	33.33	66.66
Mancha Trammer	65.80	131.60
Battery Charger	4.16	8.32
Thor Airleg (used)	8.33	16.66
Thor Airleg (new)	14.75	29.50
4 mine cars, end dump	10.00	20.00
Air Tugger	4.58	9.16
3 Sump Pumps	19.75	39.50
Strunk Chain Saw	4.58	9.16
Ventilation Fan	12.50	25.00
Air Compressor	108.33	216.66
Generating Plant	22.50	45.00
Sinking Bucket	1.67	3.34
		$698.56

$\frac{\$698.56}{110'}$ . . . . . $6.35/foot of advance

Insurance on Equipment

Mining Equipment; $27.29/month for two months (8 weeks) $54.58

Vehicles; 3 vehicles chargeable to Phase II, at $17.70/month for two months (8 weeks) . $35.40

$89.98

$\frac{\$89.98}{110'}$ . . . . . $0.82/foot of advance

Maintenance-Repair Allowance

Estimated 2.5% of total cost of Phase II
$14,519.70 x 0.025 . . . . . $362.99

$\frac{\$362.99}{110'}$ . . . . . $3.30/foot of advance

Estimated Cost and Cost/Foot of Advance, Operating Equipment, Stage I, Phase II, Sinking Project . . . . . $ 10.47/foot of advance

110' x $10.47/foot of advance . . $1,151.70

Rehabilitation and Repairs . . . . . $ 0.00

New Buildings, Improvements and Installations . . $ 0.00

Miscellaneous Expenditures (Industrial Accident Insurance, Payroll Taxes, Unemployment Compensation and Analytical Work)

Industrial Accident Insurance

6 miners (8.0% - $7,700.00 x 0.08	$616.00
non miner (4.8%) $ 792.00 x 0.048	$ 38.016
Geol. Engn. (8.0%) 600.00 x 0.08	$ 48.00
	$702.016

$\frac{\$702.016}{110'}$ . . . . . $6.38/foot of advance

Payroll Taxes

6 miners - $7,700.00 x 0.0225	$173.25
non miner - $ 792.00 x 0.0225	$ 17.82
Geol. Engn.- $ 600.00 x 0.0225	$ 13.50
	$204.57

$\frac{\$204.57}{110'}$ . . . . . $1.859/foot of advance

Unemployment Compensation (2.7%)

$9,092.00 x 0.027 . . . . . $245.48

$\frac{\$245.48}{110'}$ . . . . . $2.231/foot of advance

Analytical Work

22 assays for lead, zinc, and copper; 1/5 feet of advance in winze heading; @ $4.50 ea. . . $ 99.00

$\frac{\$99.00}{110'}$ . . . . . $0.90/foot of advance

Estimated Cost and Cost/Foot, Miscellaneous Expenditures, Stage I, Phase II, Sinking Project . . . . . $ 11.37/foot of advance

110' x $11.37/foot of advance . . $1,250.70

Contingencies . . . . . ?

Cost Summary by Major Cost Categories, Stage I, Phase II, Sinking Project

Independent Contracts	$ 0.00
Labor, Supervision, Consultants	9,092.00
Operating Materials and Supplies	3,388.00
Operating Equipment	1,151.70
Rehabilitation and Repairs	0.00
New Buildings, Improvements, Installations	0.00
Miscellaneous Expenditures	1,250.70
Contingencies	?
Estimated Total Cost, Phase II, Stage I, (110' of winze) Sinking Project	$14,882.40

Phase III

Work Description

Prepare 175-level winze station; estimated 12 rounds; 2,340 cu. ft. of rock broken and removed; station timbered. Six miners, two shifts/day; almost all hand-mucking until station is cleared. Refer to Appendix B for particular dimensions.

Time Required

Estimated time - - - two weeks (6 day week) two shifts/day

Labor Force

6 miners, 3 men/shift, two shifts/day
1 non miner (outside man), one shift/day (split)
Geol. Engn. (Part-Time)

Detailed Estimate of Costs, Stage I, Phase III, Sinking Project

Independent Contracts	$ 0.00
Labor, Supervision and Consultants (Cost for job)	
Labor, 6 miners, days pay; $22.50 ea. for 12 days	$1,620.00
Labor, non miner; $18.00/day for 12 days	216.00
Technical Supervision, Geol. Engn., 3 days/week for two weeks, 6 days @ $25.00/day	150.00
Estimated Total Wages, Phase III, Stage I, Sinking Project	$1,986.00
Operating Materials and Supplies (Costs for job)	
Explosives; 12 rounds, @ $11.975/round	$143.70
Electric Delay Caps; $5.40/round for 12 rounds	$ 64.80
Lead Wire, blasting circuit; 25' @ $0.69/foot	$ 1.725
Mine Timber, squared;	
12 posts; 7'-4" long (8 x 8) - - - - - - - - - -	471.47 brd. ft.
4 caps; 6'-0" long (8 x 8) - - - - - - - - - -	128.64 brd. ft.
2 caps; 8'-0" long (8 x 8) - - - - - - - - - -	85.76 brd. ft.
10 girts; 5'-0" long (4 x 4) - - - - - - - - - -	67.00 brd. ft.
2 sill stringers; 9'-0" long (6 x 6) - - - -	54.00 brd. ft.
Lagging;	
Back - 36 (3 x 12) 5'-4" long - - - - - - - -	575.64 brd. ft.
Sides 56 (2 x 12) 5'-4" long - - - - - - - -	575.64 brd. ft.
	1,958.15 brd. ft.
1,958.15 brd. ft. @ $75.00/1000 brd. ft. - -	$146.86
2" pipe, Airline; 25' @ $0.56/foot	$ 14.00
2" sleaves, Airline; $0.60 ea.; 1/20' jt. pipe	$ 0.75
Mine rail, 25#; 50' @ $0.94/foot	$ 47.00
Splice bars, 25# rails; $1.22/15 feet of track	$ 2.025
Track bolts, nuts and track spikes; 25' @ $0.05/foot	$ 1.25

Operating Materials and Supplies (Continued)

Ties; 4 x 4, 4' long; 1/5' of track; 4 ea. @ $0.08 . . . . . $ 0.32

1 1/4" plastic water line; 25' @ $0.26/foot . $ 6.50

8" ventilation pipe, metal; 25' @ $0.80/foot . $ 20.00

Fuel and Oil

Mine-Power Equipment

500 cfm GD Air Compressor

Fuel Consumption; $25.90/day for 12 days $310.80

Oil Consumption; $1.10/day for 12 days . . . . . $ 13.20

12 1/2 KVA Generator

Fuel Consumption; $9.21/day for 12 days $110.52

Oil Consumption; $0.275/day for 12 days . . . . . $ 3.30

Vehicles

1955, Jeep Station Wagon; $1.365/day for 12 days . . . . . $ 16.38

1948, Jeep Pick-Up; $2.73/day for 12 days . . . . . $ 32.772

1953, F600 Ford Dump Truck; $0.646/day for 12 days . . . . . $ 7.752

Estimated Cost, Operating Materials and Supplies, Phase III, Stage I, Sinking Project $943.64

Operating Equipment (Use-Allowance, Insurance, and Maintenance-Repair Allowance)

Use-Allowance Calculation (based on two week period)

Equipment in Use	Monthly Deprec.	2 week Use-Allowance
Jeep Station Wagon	$ 32.33	$16.16
Jeep Pick-Up	6.67	3.33
Ford Dump Truck	33.33	16.67
Mancha Trammer	65.80	32.90
Battery Charger	4.16	2.08
Thor Airleg (used)	8.33	4.16
4 mine cars, end dump	10.00	5.00
Air Tugger	4.58	2.29
3 sump pumps	19.75	9.87
Strunk chain saw	4.58	2.29
Ventilation fan	12.50	6.25
Sinking bucket	1.67	0.83
Air Compressor	108.33	54.16
Generator	22.50	11.25
		$167.24

Operating Equipment (Continued)

Insurance on Equipment

Mining Equipment; $6.298/week for 2 weeks . .	$ 12.596
Vehicles; 3 chargeable to Phase III, @ $4.43/week for 2 weeks	$ 8.85
	$ 21.446

Maintenance-Repair Allowance

Estimated 2.5% of total cost of Phase III; $3,201.41 x 0.025	$ 80.04
Estimated Cost, Operating Equipment, Phase III, Stage I, Sinking Project	$268.73

Rehabilitation and Repair	$ 0.00
New Buildings, Improvements, Installations	$ 0.00

Miscellaneous Expenditures (Industrial Accident Insurance, Payroll Taxes, Unemployment Compensation and Analytical Work)

Industrial Accident Insurance

6 miners (8.0%) - $1,620.00 x 0.08	$129.60
1 non miner (4.8% - $ 216.00 x 0.048	10.368
Geol. Engn. (8.0%) $ 150.00 x 0.08	12.00
	$151.968

Payroll Taxes (2.25%)

$1,986.00 x 0.0225	$ 44.685

Unemployment Compensation (2.7%)

$1,986.00 x 0.027	$ 53.622

Analytical Work

5 assays for lead, zinc and copper; 1/5' of station @ $4.50/assay	$ 22.50
Estimated Cost, Miscellaneous Expenditures, Phase III, Stage I, Sinking Project	$271.775

Contingencies	?

Cost Summary by Major Cost Categories, Stage I, Phase III, Sinking Project

Independent Contracts	$ 0.00
Labor, Supervision and Consultants	1,986.00
Operating Materials and Supplies	943.64
Operating Equipment	268.73
Rehabilitation and Repair	0.00
New Buildings, Improvements and Installations . .	0.00
Miscellaneous Expenditures	271.77
Contingencies	?
Estimated Total Cost, Stage I, Phase III, (175-level winze station), Sinking Project . .	$3,470.14

Phase IV

Work Description

Drive 400 feet of drift on 175-level; 1 or 2 headings; timbered where necessary. Drift dimensions; 5' x 7' in the clear of timber. Six miners, two shifts/day. 10' of advance/day. 500 feet of longholing; last week of Phase IV.

Time Required

Estimated time -- 7 weeks (6 day week); two shifts/day

Labor Force

6 miners, 3/shift, two shifts/day
1 non miner, 1 shift/day (split)
Geol. Engn. (Part-Time)

Detailed Estimate of Costs, Stage I, Phase IV, Sinking Project

Independent Contracts	$ 0.00
Labor, Supervision, and Consultant (Cost/Foot of Advance)	
Labor, miners, contracting	$ 20.00
Labor, non miner, $18.00/day; 10' of advance/day	$ 1.80
Technical Supervision, Geol. Engn.; 2 days/week for 7 weeks; 14 days @ $25.00/day; 400 feet of drift	$ 0.875
Estimated Cost and Cost/Foot, All Wages, Stage I, Phase IV, Sinking Project	$22.675/foot
400' @ $22.675/foot	$9,070.00
Operating Materials and Supplies (Costs/Foot of Advance)	
Explosives; 2 rounds/day, 100#/day @ $11.975/50# (10 feet of advance/day)	$ 2.395
Electric Delay Caps; 18/av. round of 5'; $5.40/round	$ 1.080
Lead Wire, blasting circuit	$ 0.069
Mine Timber, squared; (per 5' set)	
2 posts; 7'-4" long (8 x 8) - - - - - - - - -	78.58 brd. ft.
1 cap; 6'-0" long (8 x 8) - - - - - - - - - -	32.16 brd. ft.
2 girts; 5'-0" long (6 x 6) - - - - - - - - -	30.00 brd. ft.
Lagging;	
back, 6 (3 x 12), 5'-4" long - - - - - -	95.94 brd. ft.
sides, 14 (2 x 12),5'-4" long - - - - - -	149.24 brd. ft.
	385.82 brd. ft.
385.82 brd. ft. @ $75.00/1000 brd. ft. (1 set--5')	$ 5.78/ft.
Mine rail, 25#; $0.94/foot	$ 1.880
Track Splices, 25# rail; $1.22/15' of track .	$ 0.81
Track bolts, nuts, and track spikes	$ 0.05
2" pipe, airline	$ 0.56
2" sleaves, airline	$ 0.03

Operating Materials and Supplies (Continued)

Ties, 4 x 4, 4' long; 1/5' of track . . . . . $ 0.08

1 1/4" plastic water line . . . . . $ 0.26

8" ventilation pipe, metal . . . . . $ 0.80

Fuel and Oil

Mine-Power Equipment

500 cfm GD Air Compressor

Fuel Consumption; $25.90/day; 10'/day . . $ 2.59

Oil Consumption; $1.10/day; 10'/day . . . $ 0.11

12 1/2 KVA Generator

Fuel Consumption; $9.21/day; 10'/day . . $ 0.921

Oil Consumption; $0.275/day; 10'/day . . $ 0.275

Vehicles

1955, Jeep Station Wagon; $1.365/day (10' of advance/day) . . . . . $ 0.1365

1948, Jeep Pick-Up; $2.75/day (10' of advance/day) . . . . . $ 0.273

1953, F600 Ford Dump Truck; $0.646/day (10' of advance/day) . . . . . $ 0.0646

Estimated Cost and Cost/Foot, Operating Materials and Supplies, Stage I, Phase IV, Sinking Project . . . . . $ 17.435/foot

400' @ $17.435/foot $6,974.00

Operating Equipment (Use-Allowance, Insurance, Maintenance-Repair Allowance)

Use-Allowance Calculation

Equipment in Use	Monthly Deprec.	7 week Use-Allowance
Jeep Station Wagon	$ 32.33	$ 56.54
Jeep Pick-Up	6.67	11.67
Ford Dump Truck	33.33	58.33
Mancha Trammer	65.80	115.20
Battery Charger	4.16	7.28
Thor Airleg (used)	8.33	14.58
Thor Airleg (new)	14.75	25.82
4 mine cars, end dump	10.00	17.50
Air Tugger	4.58	8.02
3 sump pumps	19.75	34.57
Strunk chain saw	4.58	8.02
Ventilation fan	12.50	21.88
Mucking Machine	33.33	58.33
Sinking Bucket	1.67	2.92
Air compressor	108.33	189.58
Generating Plant	22.50	39.39
		$669.63

$\frac{\$669.63}{400'}$ . . . . . $1.67/foot of advance

Operating Equipment (Continued)

Insurance on Equipment

Mining Equipment; $6.298/week for 7 weeks . . $ 44.086

Vehicles; 3 vehicles chargeable to job;
$4.43/week for 7 weeks . . . . . $ 31.01
$ 75.096

$\frac{\$75.096}{400'}$ . . . . . $0.19/foot of advance

Maintenance-Repair Allowance

Estimated 2.5% of total cost of Phase IV
$14,519.70 x 0.025 . . . . . $362.99

$\frac{\$362.99}{400'}$ . . . . . $1.14/foot of advance

Estimated Cost and Cost/Foot, Operating Equipment, Stage I, Phase IV, Sinking Project . . . . . $ 3.00/foot

400' x $3.00/foot $1,200.00

Rehabilitation and Repairs . . . . . $ 0.00

New Buildings, Improvements and Installations . . $ 0.00

Miscellaneous Expenditures (Industrial Accident Insurance, Payroll Taxes, Unemployment Compensation, and Analytical Work)

Industrial Accident Insurance

6 miners (8.0%)	- $8,000.00 x 0.08	$640.00
non miner (4.8%)	- $ 720.00 x 0.048	$ 34.56
Geol. Engn. (8.0%)	$ 350.00 x 0.08	$ 28.00
		$702.56

$\frac{\$702.56}{400'}$ $1.76/foot

Payroll Taxes

$9,070.00 x 0.0225 . . . . . $204.057

$\frac{\$204.057}{400'}$ $0.51/foot

Unemployment Compensation

$9,070.00 x 0.027 . . . . . $244.89

$\frac{\$244.89}{400'}$ $0.61/foot

Analytical Work

80 assays for lead, zinc, and copper; 1/5 feet of drift; each assay $4.50 . . . . . $360.00

$\frac{\$360.00}{400'}$ $0.90/foot

Estimated Cost and Cost/Foot, Miscellaneous Expenditures, Stage I, Phase IV, Sinking Project . . . . . $ 3.78/foot

400' x $3.78/foot $1,512.00

Contingencies . . . . . ?

Cost Summary by Major Cost Categories, Stage I, Phase IV, Sinking Project

Independent Contracts	$ 0.00
Labor, Supervision and Consultants	9,070.00
Operating Materials and Supplies	6,974.00
Operating Equipment	1,200.00
Rehabilitation and Repairs	0.00
New Buildings, Improvements and Installations	0.00
Miscellaneous Expenditures	1,512.00
Contingencies	?
	$18,756.00
500' of longholing @ $1.00/foot	500.00
Estimated Total Cost Phase IV, Stage I (400' of timbered drift (175-level), and 500' of longholing), Sinking Project	$19,256.00

Phase V

Work Description

On basis of longhole information, drive 100' of crosscut on 175-level; possibly 4 headings. Crosscut to be 5' x 7' in the clear of timber if timbered. Six miners, two shifts/day. 8.3' of advance/day, possibly two headings worked/day.

Time Required

Estimated time -- 2 weeks (6 day week); two shifts/day

Labor Force

6 miners, 3/shift, two shifts/day
1 non miner, 1 shift/day (split)
Geol. Engn. (Part-Time)

Detailed Estimate of Costs, Stage I, Phase V, Sinking Project

Independent Contracts	$ 0.00

Labor, Supervision and Consultants (Costs/Foot of Advance)

Labor, miners, contracting	$ 20.00
Labor, non miner, days pay; $18.00/day (8.3' of advance/day)	$ 2.16
Technical Supervision, Geol. Engn.; 2 days/week for two weeks; 4 days @ $25.00/day 100' of crosscut	$ 1.00
Estimated Cost and Cost/Foot, all wages, Stage I, Phase V, Sinking Project	$ 23.16

100' @ $23.16/foot $2,316.00

Operating Materials and Supplies (Costs/Foot of Advance)

Explosives; $11.975/round of 5 feet	$ 2.395
Electric Delay Caps; $5.40/round of 5 feet	$ 1.080
Lead Wire, blasting circuit	$ 0.069
Mine timber, square (requirements same as for drifting in Phase IV)	$ 5.780
Mine rail, 25#; $0.94/foot	$ 1.880

Operating Materials and Supplies (Continued)

Track splices, 25# rail; $1.22/15' of track . . $ 0.080

Track bolts, nuts and track spikes . . . . . $ 0.050

4 Switchpoints; $15.00 ea. (est. 4 headings) /100 feet of crosscut . . . . . $ 0.600

Ties, 4 x 4, 4' long, 1/5' of track . . . . . $ 0.080

Note: 2" airline, 8" ventilation pipe, and waterline not required for short crosscuts.

Fuel and Oil

Mine-Power Equipment

500 cfm GD Air Compressor

Fuel Consumption; $25.90/day, 8.3' of advance/day . . . . . $ 3.12

Oil Consumption; $1.10/day, 8.3' of advance/day . . . . . $ 0.132

12 1/2 KVA Generator

Fuel Consumption; $9.21/day, 8.3' of advance/day . . . . . $ 1.10

Oil Consumption; $0.275/day, 8.3' of advance/day . . . . . $ 0.033

Vehicles

1955 Jeep Station Wagon; $1.365/day, 8.3' of advance/day . . . . . $ 0.164

1948 Jeep Pick-Up; $2.730/day, 8.3' of advance/day . . . . . $ 0.329

1953 F600 Ford Dump Truck; $0.646/day, 8.3' of advance/day . . . . . $ 0.780

Estimated Cost and Cost/Foot, Operating Materials and Supplies, Stage I, Phase V, Sinking Project . . . . . $ 16.89/foot

100' @ $16.89/foot $1,689.00

Operating Equipment (Use-Allowance, Insurance, and Maintenance-Repair Allowance)

Use-Allowance Calculation

Equipment in Use	Monthly Deprec.	2 week Use-Allowance
Jeep Station Wagon	$32.33	$ 16.16
Jeep Pick-Up	6.67	3.33
Ford Dump Truck	33.33	16.67
Mancha Trammer	65.80	32.90
Battery Charger	4.16	2.08
Thor Airleg (used)	8.33	4.16
Thor Airleg (new)	14.75	7.37
4 mine cars, end dump	10.00	5.00
Strunk chain saw	4.58	2.29
Air Tugger	4.58	2.29
3 sump pumps	19.75	9.87

Operating Equipment (Continued)

Use-Allowance Calculation

Equipment in Use	Monthly Deprec.	2 week Use-Allowance
Ventilation fan	$ 12.50	$ 6.25
Mucking Machine	33.33	16.67
Sinking Bucket	1.67	0.83
Air Compressor	108.33	54.16
Generating Plant	22.50	11.25
		$191.28

$\frac{\$191.28}{100'}$ $1.913/foot

Insurance on Equipment

Mining Equipment; $6.298/week for 2 weeks . . $ 12.596
Vehicles; 3 vehicles chargeable to job @
$4.43/week for 2 weeks . . . . . $ 8.85
$ 21.446

$\frac{\$21.446}{100'}$ $0.21/foot

Maintenance-Repair Allowance

Estimated 2.5% of total cost of Phase V;
$4,600.00 x 0.025 . . . . . $115.00

$\frac{\$115.00}{100'}$ $1.15/foot

Estimated Cost and Cost/Foot, Operating
Equipment, Stage I, Phase V, Sinking Project . $ 3.27/foot

100' @ $3.27/foot $327.00

Rehabilitation and Repairs . . . . . $ 0.00

New Buildings, Improvements, and Installations . . $ 0.00

Miscellaneous Expenditures (Industrial Accident Insurance, Payroll Taxes, Unemployment Compensation and Analytical Work)

Industrial Accident Insurance

6 miners (8.0%) - $2,000.00 x 0.08 . . . . . $160.00
Non miner (4.8%) $ 216.00 x 0.048 . . . . . 10.38
Geol. Engn. (8.0%)$ 100.00 x 0.08 . . . . . 8.00
$178.38

$\frac{\$178.38}{100'}$ $1.784/foot

Payroll Taxes

$2,316.00 x 0.0225 . . . . . $ 52.11

$\frac{\$52.11}{100'}$ $0.521/foot

Unemployment Compensation

$2,316.00 x 0.027 . . . . . $ 62.53

$\frac{\$62.53}{100'}$ $0.625/foot

Analytical Work

20 Assays for lead, zinc, and copper; 1/5' of
crosscut @ $4.50 ea. . . . . $ 90.00

$\frac{\$90.00}{100'}$ $0.90/foot

Estimated Cost and Cost/Foot, Miscellaneous Expenditures, Stage I, Phase V, Sinking Project . . . . . $ 3.83/foot

100' @ $3.83/foot $383.00

Contingencies . . . . . ?

Cost Summary by Major Cost Categories, Stage I, Phase V, Sinking Project

Independent Contracts	$ 0.00
Labor, Supervision and Consultants	2,316.00
Operating Materials and Supplies	1,689.00
Operating Equipment	327.00
Rehabilitation and Repair	0.00
New Buildings, Improvements, and Installations . .	0.00
Miscellaneous Expenditures	383.00
Contingencies	?
Estimated Total Cost Phase V, Stage I, (100' of timbered cross cut (175-level)), Sinking Project	$4,715.00

Stage II (To be undertaken only if findings in Stage I are sufficient to warrant a continuation of the Morning-Midnight exploration project)

Phase I

Work Description

Deepen exploratory winze an additional 100 feet (same specifications as in Stage I, Phase II). The work to be contracted on a footage basis—winze heading advanced 15'/week; 2.5'/day average; average round 5'; 6 day work week, two shifts/day.

Time Required

At the above weekly rate of advance, Phase II will require 7 weeks for completion

OFFICIAL FILE COPY
D M E A
RECEIVED APR 22 1957
DATE | INITIALS | CODE

Labor Force

6 miners, 3/shift, two shifts/day
1 non miner (outside man), 1 shift/day (split)
Geol. Engn. (Part-Time)

Details Estimate of Costs, Stage II, Phase I, Sinking Project

Independent Contracts . . . . . $ 0.00

Labor, Supervision and Consultants (Costs/Foot of Advance)

Labor, miners, contracting	$ 70.00
Labor, non miner, days pay; $18.00/day, (2.5' of advance/day)	$ 7.20
Technical Supervision, Geol. Engn.; 3 days/week for 7 weeks; 21 days @ $25.00/day (2.5'/day) .	$ 5.25
Estimated Cost and Cost/Foot, All Wages, Stage II, Phase I, Sinking Project	$ 82.45/foot

100' @ $82.45/foot $8,245.00

Operating Materials and Supplies (Cost/Foot of Advance; same as in Stage I, Phase II, Sinking Project)

Explosives	$ 2.395
Electric Delay Caps	$ 1.080

Operating Materials and Supplies (Continued)

Connecting wire, Electric Blasting . . . . . $ 0.018

Lead Wire, Blasting Circuit (Salvaged from Stage I, Phases IV and V)

Mine Timber, squared . . . . . $ 7.848

Ladders, wedges, etc. . . . . $ 0.050

Hanging Rods, nuts, and washers . . . . . $ 0.600

2" pipe, airline . . . . . $ 0.56

2" pipe, sump pump discharge line . . . . . $ 0.56

2" sleaves, airline . . . . . $ 0.03

2" sleaves, sump pump discharge line . . . . . $ 0.03

8" ventilation pipe, metal . . . . . $ 0.80

1 1/4" plastic water line . . . . . $ 0.26

Fuel and Oil

Mine-Power Equipment

500 cfm GD Air Compressor

Fuel Consumption . . . . . $ 10.37

Oil Consumption . . . . . $ 0.44

12 1/2 KVA Generator

Fuel Consumption . . . . . $ 3.68

Oil Consumption . . . . . $ 0.11

Vehicles

1955 Willys Jeep Station Wagon . . . . . $ 0.546

1948 Willys Jeep Pick-Up . . . . . $ 1.091

1953 F600 Ford Dump Truck . . . . . $ 0.260

Estimated Cost and Cost/Foot, Operating Materials and Supplies, Stage II, Phase I, Sinking Project . . . . . $ 30.72/foot

100' @ $30.72/foot $3,072.00

Operating Equipment (Use-Allowance, Insurance and Maintenance-Repair Allowance)

Use-Allowance Calculation

Equipment in Use	Monthly Deprec.	7 week Use-Allowance
Jeep Station Wagon	$32.33	$ 56.54
Jeep Pick-Up	6.67	11.67
Ford Dump Truck	33.33	58.33
Mancha Trammer	65.80	115.20
Battery Charger	4.16	7.28
Thor Airleg (used)	8.33	14.58
Thor Airleg (new)	14.75	25.82
4 mine cars, end dump	10.00	17.50

Operating Equipment (Continued)

Equipment in Use	Monthly Deprec.	7 week Use-Allowance
Air Tugger	$ 4.58	$ 8.02
Strunk Chain Saw	4.58	8.02
4 Sump Pumps	26.33	46.07
Air Compressor	108.33	189.50
Generating Plant	22.50	39.39
Ventilation fan	12.50	21.88
Sinking bucket	1.67	2.92
		$622.80

$\frac{\$622.80}{100'}$ $6.23/foot

Insurance on Equipment

Mining Equipment; 7 weeks @ $6.298/week . . . $ 44.086
Vehicles; 3 chargeable to job; 7 weeks @ $4.43/week . . . . . $ 31.01
$ 75.096

$\frac{\$75.096}{100'}$ $0.751/foot

Maintenance-Repair Allowance

Estimated 2.5% of total cost of Stage II, Phase I; $13,108.50 x 0.025 . . . . . $327.71

$\frac{\$327.71}{100'}$ $3.28/foot

Estimated Cost and Cost/Foot of Advance, Operating Equipment, Stage II, Phase I, Sinking Project . . . . . $ 10.26/foot of advance

100' @ $10.26/foot $1,026.00

Rehabilitation and Repairs . . . . . $ 0.00

New Buildings, Improvements and Installations . . $ 0.00

Miscellaneous Expenditures (Industrial Accident Insurance, Payroll Taxes, Unemployment Compensation, and Analytical Work)

Industrial Accident Insurance

6 miners (8.0%) - $7,000.00 x 0.08 . . . . . $560.00
non miner (4.8%) - $ 720.00 x 0.048 . . . . . $ 34.56
Geol. Engn. (8.0%) $ 525.00 x 0.08 . . . . . $ 42.00
$636.56

$\frac{\$636.56}{100'}$ $6.37/foot

Payroll Taxes (Entire Payroll not Taxable)

3 miners; $845.01 ea.; 3 x $845.01 x 0.0225 . $ 57.04
3 miners; $872.01 ea.; 3 x $872.01 x 0.0225 . $ 58.86
non miner; $720.00 x 0.0225. . . . . $ 16.20
Geol. Engn.; $525.00 x 0.0225 . . . . . $ 11.81
$143.91

$\frac{\$143.91}{100'}$ $1.439/foot

Unemployment Compensation

$8,245.00 x 0.027 . . . . . $222.615

$\frac{\$222.615}{100'}$ $2.226/foot

Analytical Work

20 assays for lead, zinc, and copper; 1/5' of winze; $4.50 ea. . . . . $ 90.00

$\frac{\$90.00}{100'}$ $0.90/foot

Estimated Cost and Cost/Foot, Miscellaneous Expenditures, Stage II, Phase I, Sinking Project . . . . . $ 10.935/foot

100' @ $10.935/foot $1,093.50

Contingencies . . . . . ?

Cost Summary by Major Cost Categories, Stage II, Phase I, Sinking Project

Independent Contracts	$ 0.00
Labor Supervision and Consultants	8,245.00
Operating Materials and Supplies	3,072.00
Operating Equipment	1,026.00
Rehabilitation and Repair	0.00
New Buildings, Improvements and Installations . .	0.00
Miscellaneous Expenditures	1,093.50
Contingencies	?
Estimated Total Cost, Stage II, Phase I (100' of Winze), Sinking Project	$13,436.50

Phase II

Work Description

Prepare 275-level winze station; same specifications as Stage I, Phase III (refer to Appendix B).

Time Required

Estimated Time -- two weeks (6 day week), two shifts/day

Labor Force

6 miners, 3/shift; two shifts/day
non miner (outside man) one shift/day (split)
Geol. Engn. (Part-Time)

Detailed Estimate of Costs, Stage II, Phase II, Sinking Project

Independent Contracts . . . . . $ 0.00

Labor, Supervision and Consultants

Labor, 6 miners, days pay; $22.50 ea. for 12 days	$1,620.00
Labor, non miner, days pay; $18.00/day for 12 days	216.00
Technical Supervision, Geol. Engn.; 3 days/week for two weeks; 6 days @ $25.00/day . .	150.00
Estimated Cost, All Wages, Phase II, Stage II, Sinking Project	$1,986.00

Operating Materials and Supplies (Same as in Stage I, Phase III, Sinking Project) (Costs for Job)

Explosives	$143.70
Electric Delay Caps	$ 64.80

Operating Materials and Supplies (Continued)

Lead Wire, Blasting Circuit (Salvaged from Stage I, Phases IV and V)

Mine Timber, squared	$146.86
2" pipe, airline	$ 14.00
2" sleaves, airline	$ 0.75
Mine rail, 25#	$ 47.00
Splice bars, 25# rail	$ 2.02
Track bolts, nuts, track spikes	$ 1.25
Ties	$ 0.32
1 1/4" plastic water line	$ 6.50
8" ventilation pipe, metal	$ 20.00

Fuel and Oil

Mine-Power Equipment

500 cfm GD Air Compressor

Fuel Consumption	$310.80
Oil Consumption	$ 13.20

12 1/2 KVA Generator

Fuel Consumption	$110.52
Oil Consumption	$ 3.30

Vehicles

1955 Jeep Station Wagon	$ 16.38
1948 Jeep Pick-Up	$ 32.772
1953 F600 Ford Dump Truck	$ 7.752

Estimated Cost, Operating Materials and Supplies Stage II, Phase II, Sinking Project $941.92

Operating Equipment (Use-Allowance, Insurance, and Maintenance-Repair Allowance)

Use-Allowance Calculation

Equipment in Use	Monthly Deprec.	2 week Use-Allowance
Jeep Station Wagon	$ 32.33	$ 16.16
Jeep Pick-Up	6.67	3.33
Ford Dump Truck	33.33	16.67
Mancha Trammer	65.80	32.90
Battery Charger	4.16	2.08
Thor Airleg (used)	8.33	4.16
4 mine cars, end dump	10.00	5.00
Strunk chain saw	4.58	2.29
Air Tugger	4.58	2.29
4 sump pumps	26.33	13.16
Sinking bucket	1.67	0.83
Ventilation fan	12.50	6.25
Air Compressor	108.33	54.16
Generating Plant	22.50	11.25
		$170.53

Insurance on Equipment

Mining Equipment	$ 12.596
Vehicles	$ 8.85
	$ 21.45

Maintenance-Repair Allowance

Estimated 2.5% of total cost of Phase II, Stage II, Sinking Project $3,356.22 x 0.025	$ 83.90
Estimated Cost, Operating Equipment, Phase II, Stage II, Sinking Project	$275.88

Rehabilitation and Repair	$ 0.00
New Buildings, Improvements, Installations	$ 0.00

Miscellaneous Expenditures (Industrial Accident Insurance, Payroll Taxes, Unemployment Compensation, and Analytical Work)

Industrial Accident Insurance

6 miners (8.0%) - $1,620.00 x 0.08	$129.60
non miner (4.8%) - $ 216.00 x 0.048	$ 10.368
Geol. Engn. (8.0%) $ 150.00 x 0.08	$ 12.00
	$151.968

Payroll Taxes

Non miner; $216.00 x 0.0225	$ 4.86
Geol. Engn.; $150.00 x 0.0225	$ 3.375
	$ 8.235

Unemployment Compensation

$1,986.00 x 0.027	$ 53.62

Analytical Work

5 assays for lead, zinc, and copper; 1/5' of station length @ $4.50 ea.	$ 22.50
Estimated Cost, Miscellaneous Expenditures, Stage II, Phase II, Sinking Project	$236.32

Contingencies	?

Cost Summary by Major Cost Categories, Stage II, Phase II, Sinking Project

Independent Contracts	$ 0.00
Labor, Supervision and Consultants	1,986.00
Operating Materials and Supplies	941.92
Operating Equipment	275.88
Rehabilitation and Repair	0.00
New Buildings, Improvements and Installations . .	0.00
Miscellaneous Expenditures	236.32
Contingencies	?
Estimated Total Cost, Stage II, Phase II (275-level Winze Station), Sinking Project . .	$3,440.12

Phase III

Work Description

Drive 400 feet of drift on 275-level; 1 or 2 headings; timbered where necessary. Drift dimensions same as in Stage I, Phase IV. Six miners, two shifts/day, 10 feet of advance/day. 500 feet of longholing last week of Phase III, Stage II.

Time Required

Estimated Time -- 7 weeks (6 day week); 2 shifts/day

Labor Force

6 miners, 3/shift, two shifts/day
non miner, 1 shift/day (split)
Geol. Engn. (Part-Time)

Detailed Estimate of Costs, Stage II, Phase III, Sinking Project

Independent Contracts . . . . . $ 0.00

Labor, Supervision and Consultants (Costs/Foot of Advance)

Labor, miners, contracting	$ 20.00
Labor, non miner, $18.00/day; 10' of advance/day	$ 1.80
Technical Supervision, Geol. Engn.; 2 days/week for 7 weeks; 14 days @ $25.00/day (10' of advance/day)	$ 0.875
	$ 22.675/foot

400' x $22.675/foot $9,070.00

Operating Materials and Supplies (Costs/Foot of Advance; same as in Stage I, Phase IV, Sinking Project)

Explosives	$ 2.395
Electric Delay Caps	$ 1.080
Lead Wire, Blasting Circuit	$ 0.069
Mine Timber, squared	$ 5.78
Mine Rail, 25#	$ 1.88
Track Splices, 25# rail	$ 0.081
Track Bolts, Nuts, and Track Spikes	$ 0.05
2" pipe, Airline	$ 0.56
2" sleaves, Airline	$ 0.03
Ties, 4 x 4	$ 0.08
1 1/4" plastic water line	$ 0.26
8" Ventilation pipe, metal	$ 0.80

Fuel and Oil

Mine-Power Equipment

500 cfm GD Air Compressor

Fuel Compumption	$ 2.59
Oil Consumption	$ 0.11

12 1/2 KVA Generator

Fuel Consumption	$ 0.921
Oil Consumption	$ 0.275

Vehicles

1955 Jeep Station Wagon	$ 0.1365
1948 Jeep Pick-Up	$ 0.2730
1953 F600 Ford Dump Truck	$ 0.0646

Estimated Cost and Cost/Foot, Operating Materials and Supplies, Stage II, Phase III, Sinking Project . . . . . $ 17.435/foot

400' x $17.435/foot $6,974.00

Operating Equipment (Use-Allowance, Insurance and Maintenance-Repair Allowance)

Use-Allowance Calculation

Equipment in Use	Monthly Deprec.	7 week Use-Allowance
Jeep Station Wagon	$ 32.33	$ 56.54
Jeep Pick-Up	6.67	11.67
Ford Dump Truck	33.33	58.33
Mancha Trammer	65.80	115.20
Battery Charger	4.16	7.28
Thor Airleg (used)	8.33	14.58
Thor Airleg (new)	14.75	25.82
4 mine cars, end dump	10.00	17.50
Mucking Machine	33.33	58.33
Chain Saw	4.58	8.02
Air Tugger	4.58	8.02
4 Sump Pumps	26.33	46.04
Air Compressor	108.33	189.58
Generating Plant	22.50	39.39
Ventilation Fan	12.50	21.88
Sinking Bucket	1.67	2.92
		$681.10

$681.10 / 400' $1.70/foot

Insurance on Equipment (Note: Insurance premium on Mining Equipment changes within Phase III, Stage II, i.e. on December 9, 1957)

Mining Equipment

3 weeks @ $6.298/week	$ 18.894
4 weeks @ $4.725/week	$ 18.900
Vehicles; 3 chargeable to job	$ 31.01
	$ 68.804

$68.804 / 400' $0.172/foot

Maintenance-Repair Allowance

Estimated 2.5% of total cost of Phase III
$18,124.00 x 0.025 . . . . . $453.10

$453.10 / 400' $1.13/foot

Estimated Cost and Cost/Foot, Operating Equipment, Stage II, Phase III, Sinking Project . . . . . $ 3.00/foot

400' @ $3.00/foot $1,200.00

Rehabilitation and Repair . . . . . $ 0.00

New Buildings, Improvements and Installations . . $ 0.00

Miscellaneous Expenditures (Industrial Accident Insurance, Payroll Taxes, Unemployment Compensation and Analytical Work)

Industrial Accident Insurance

6 miners (8.0%) - $8,000.00 x 0.08	$640.00
1 non miner (4.8%) $ 720.00 x 0.048	$ 34.56
1 Geol. Engn. (8.0%) $350.00 x 0.08	$ 28.00
	$702.56

$\frac{\$702.56}{400'}$ $1.76/foot

Payroll Taxes (2.25%)

1 non miner; $720.00 x 0.0225	$ 16.20
1 Geol. Engn.; $350.00 x 0.0225	$ 7.875
	$ 24.075

$\frac{\$24.075}{400'}$ $0.06/foot

Unemployment Compensation (2.7%)

$9,070.00 x 0.027 . . . . . $244.89

$\frac{\$244.89}{400'}$ $0.61/foot

Analytical Work

80 assays for lead, zinc and copper; 1/5 feet of drift; each assay $4.50 . . . . . $360.00

$\frac{\$360.00}{400'}$ $0.90/foot

Estimated Cost and Cost/Foot, Miscellaneous Expenditures, Stage I, Phase IV, Sinking Project . . . . . $ 3.33/foot

400' drift @ $3.33/foot . . . $1,332.00

Contingencies . . . . . ?

Cost Summary by Major Cost Categories, Stage II, Phase III, Sinking Project

Independent Contracts	$ 0.00
Labor, Supervision, Consultants	9,070.00
Operating Materials and Supplies	6,974.00
Operating Equipment	1,200.00
Rehabilitation and Repair	0.00
New Buildings, Improvements, Installations	0.00
Miscellaneous Expenditures	1,332.00
Contingencies	?
	$18,576.00
500' of Longholing @ $1.00/foot	500.00
Estimated Total Cost Phase III, Stage II, (400' of timbered drift (275-level), and 500' of Longholing), Sinking Project	$19,076.00

Phase IV

Work Description

On basis of longhole information, drive 100' of crosscut on 275-level; possibly 4 headings; Timbered where necessary. Crosscut dimensions same as Stage I, Phase V. Six miners, two shifts/day. 8.3' of advance/day, possibly two headings worked/day.

Time Required

Estimated time -- 2 weeks (6 day week); two shifts/day

Labor Force

6 miners, 3/shift, two shifts/day
1 non miner, 1 shift/day (split)
Geol. Engn. (Part-Time)

Detailed Estimate of Costs, Stage II, Phase IV, Sinking Project

Independent Contracts . . . . . $ 0.00

Labor, Supervision and Consultants (Costs/Foot of Advance)

Labor, miners, contracting	$ 20.00
Labor, non miner, days pay; $18.00/day (8.3' of advance/day).	$ 2.16
Technical Supervision, Geol. Engn.; 2 days/week for two weeks; 4 days @ $25.00/day (100' of crosscut)	$ 1.00
Estimated Cost and Cost/Foot All Wages, Stage II, Phase IV, Sinking Project	$ 23.16
100' @ $23.16/foot	$2,316.00

Operating Materials and Supplies (Costs/Foot of Advance; Cost same as in Stage I, Phase V)

Explosives	$ 2.395
Lead Wire, blasting (salvaged from Stage II, Phase III Work)	$ 0.000
Electric Delay Caps	$ 1.080
Timber (Requirements same as Stage II, Phase III)	$ 5.78
25# Rail	$ 1.88
Track Splices, 25# Rail	$ 0.08
Track bolts, nuts, track spikes	$ 0.05
4 Switchpoints (Est. 4 headings)	$ 0.60
Ties, 4 x 4	$ 0.08

Note: 2" airline, waterline, 8" vent pipe not required for short crosscuts.

Fuel and Oil

Mine-Power Equipment

500 cfm GD Air Compressor

Fuel Comsumption	$ 3.12
Oil Consumption	$ 0.132

12 1/2 KVA Generator

Fuel Consumption	$ 1.10
Oil Consumption	$ 0.033

Vehicles

1955 Jeep Station Wagon	$ 0.164
1948 Jeep Pick-Up	$ 0.329
1953 F600 Ford Dump Truck	$ 0.078

Estimated Costs and Costs/Foot, Operating Materials and Supplies, Stage II, Phase IV, Sinking Project . . . . . $ 16.89/foot

100' @ $16.89/foot $1,689.00

Operating Equipment (Use-Allowance, Insurance and Maintenance-Repair Allowance)

Use-Allowance Calculation

Equipment in Use	Monthly Deprec.	2 week Use-Allowance
Jeep Station Wagon	$ 32.33	$ 16.16
Jeep Pick Up	6.67	3.33
Ford Dump Truck	33.33	16.67
Mancha Trammer	65.80	32.90
Trammer Charger	4.16	2.08
1 Thor Airleg (used)	8.33	4.16
1 Thor Airleg (new)	14.75	7.37
4 mine cars, end dump	10.00	5.00
Strunk chain saw	4.58	2.29
1 GD Air Tugger	4.58	2.29
4 GD Sump pumps	26.33	13.16
1 EIMCO Mucking Machine	33.33	16.67
500 cf Compressor	108.00	54.16
12½ KVA Generator	22.50	11.25
1 Hur	12.50	6.25
1 Sinking Bucket (used)	1.67	0.83
		$194.57

$194.57 / 100' $1.95/foot

Insurance on Equipment

Mining Equipment	$ 9.450
Vehicles; 3 chargeable to job	$ 8.85
	$ 18.30

$18.30 / 100' $0.18/foot

Maintenance-Repair Allowance

Estimated 2.5% of total cost of Phase IV $4,556.00 x 0.025. . . . . $113.90

$113.90 / 100' $1.14/foot

Estimated Cost and Cost/Foot, Operating Equipment, Stage II, Phase IV, Sinking Project $ 3.27/foot

100' x $3.27/foot $327.00

Rehabilitation and Repairs . . . . . $ 0.00

New Buildings, Improvements and Installations . . $ 0.00

Miscellaneous Expenditures (Industrial Accident Insurance, Payroll Taxes, Unemployment Compensation and Analytical Work)

Industrial Accident Insurance

6 miners (8%) - $2,000 x 0.08	$160.00
1 Geol. Engn. (8%) - $100.00 x 0.08	$ 8.00
1 non miner (4.8%) - $216.00 x 0.048	$ 10.38
	$178.38

$\frac{\$178.38}{100'}$ $1.78/foot

Payroll Taxes (2.25%)

1 non miner $216.00 x 0.0225	$ 4.86
1 Geol. Engn. $100.00 x 0.0225	$ 2.25
	$ 7.11

$\frac{\$7.11}{100'}$ $0.07/foot

Unemployment Compensation

$2,316.00 x 0.027 . . . . . $ 62.53

$\frac{\$62.53}{100'}$ $0.63/foot

Analytical Work

1 assay for lead, zinc and copper; 1/5' of crosscut @ $4.50 ea.
20 x $4.50 . . . . . $ 90.00

$\frac{\$90.00}{100'}$ $0.90/foot

Estimated Cost and Cost/Foot, Miscellaneous Expenditures, Stage II, Phase IV, Sinking Project . . . . . $ 3.38/foot

100' @ $3.38/foot $338.00

Contingencies . . . . . ?

Cost Summary by Major Cost Categories, Stage II, Phase IV, Sinking Project

Independent Contracts	$ 0.00
Labor, Supervision and Consultants	2,316.00
Operating Materials and Supplies	1,689.00
Operating Equipment	327.00
Rehabilitation and Repair	0.00
New Buildings, Improvements and Installations . .	0.00
Miscellaneous Expenditures	383.00
Contingencies	?
Estimated Total Cost Stage II, Phase IV, (100' of timbered crosscut (175-level)) Sinking Project	$4,670.00

A Tabulation of Estimated Costs and Time Scheduling by Phases, Sinking Project

Stage I (Based on a 6 day work week; two shifts/day)

Phase	Work Description	Time Required, Shifts/Day, and Labor Force	Estimated Cost
I	Preparation of 75-level surface installation, rehabilitation of 320 feet of access adit and drift, and preparation of 75-level winze station (772.5 cu.ft.)	1 week; (6 days) (one shift/day) Labor Force: 7 men	$ 1,696.66

Phase	Work Description	Time Required, Shifts/Day, and Labor Force	Estimated Cost
II	Sink 110 feet of exploratory winze (10 feet of sump); 6' x 10' outside of timber.	8 weeks (two shifts/day) 7 men	$14,882.40
III	Prepare 175-level winze station (2340 cu. ft.)	2 weeks (two shifts/day) 7 men	$ 3,470.14
IV	Drive 400 feet of timbered drift on 175-level on one or two headings (5' x 7' inside of timber); plus 500' of longholing.	7 weeks (two shifts/day) 7 men	$19,256.00
V	Drive 100 feet of timbered crosscut on basis of longhole information; possibly four headings (same dimension as timbered drift).	2 weeks (two shifts/day) 7 men	$ 4,715.00
		20 weeks	$44,020.20

Estimated cost, to Western America of Montana, Inc., of mining equipment not on hand . . . . . $ 3,914.50

Estimated Cost of Stage I of Sinking Project . . . $47,934.70

Note: If starting date is May 1, 1957, Stage I of the Sinking Project will be completed on or about September 17, 1957.

Stage II (Based on same time scheduling as above; also dimensions of workings are the same)

Phase	Work Description	Time Required Shifts/day and Labor Force	Estimated Cost
I	Deepen winze for an additional 100 feet	7 weeks (two shifts/day) 7 men	$13,436.50
II	Preparation of 275-level winze station	2 weeks (two shifts/day) 7 men	$ 3,440.12
III	Drive 400 feet of timbered drift on 275-level on one or two headings; 500 feet of longholing.	7 weeks (two shifts/day) 7 men	$19,076.00
IV	Drive 100 feet of timbered crosscut on basis of longhole information; possibly four headings.	2 weeks (two shifts/day) 7 men	$ 4,670.00
		18 weeks	$40,622.62

Estimated Cost to Western America of Montana, Inc. of mining equipment not on hand . . . . . $ 789.50

Estimated Cost of Stage II of Sinking Project . . . $41,412.12

Note: Stage II should be completed on or about January 21, 1958

Cost Summary, Sinking Project

Stage I	$47,934.70
Stage II	$41,412.12
Estimated Total Cost of Sinking Project	$89,346.82

Crosscut Project (Alternate Plan; to be considered if recommended Sinking Project should not prove feasible because of a severe water flooding problem)

Stage I

Phase I

Work Description

New Construction Required

1. Construct approximately 1/2 mile of limited access mine road from existing road near 75-level mine yard to new tunnel site (refer to surface map enclosed in engineering report for proposed tunnel site).

2. Excavate for mine yard and new tunnel site (275-level)

Mine Yard Installations (275-level)

1. Lay approximately 100 feet of track (25# mine rail) on mine yard; plus 1 switch for short siding.

2. Small building over track to house trammer generating plant and charging unit.

3. Prepare waste dump facilities.

4. Excavate for, and pour concrete foundation for ventilation fan (approx. 6' x 6')

Haulage to Site

1. Mining equipment from Helena and Butte, Montana, and from the 75-level mine yard.

2. Trailer house (to be used for change house) from Helena, Montana.

3. Sufficient operating materials and supplies to commence crosscut operation.

Miscellaneous Operations

1. Install air and water-receiver tanks.

2. Plumb air compressor to air receiver.

3. Plumb air line to water-receiver tank.

4. Make sure of water supply at the 275-level tunnel site.

5. Install generating plant and charging panel for trammer.

6. Install ventilation fan, and plumb with compressed air line, and with 8" metal ventilation pipe for both suction and blowing.

Time Required

Construction of limited access mine road	4 days
Mine yard and tunnel site preparation	2 days
Preparation of mine yard installations, general haulage of equipment, materials, and supplies; and miscellaneous operations	6 days
Estimated time required, two work weeks, one shift/day .	12 days

Labor Force

5 men (working as truck drivers and general laborers)
1 heavy equipment man (bull-dozer operator, first week; truck driver and general laborer, second week)
Geol. Engn. (Part-time)
Total Labor Force, Phase I . . . . . 7 men

Detailed Estimate of Costs (Indexed to subheadings under Estimate of Costs Form MF-103)

Independent Contracts . . . . . $ 0.00

Labor Supervision and Consultants (Costs for Job)

Labor, 4 miners, days pay (working as truck drivers and general laborers); $18.00/day ea. for 12 days . . .	$864.00
Labor, nonminer, days pay (general laborer) $18.00/day for 12 days	216.00
Bull-dozer operator; $2.75/hr., 8 hrs./day, for 6 days	132.00
Also general workman and truck driver @ $18.00/day for 6 days	108.00
Technical supervision, Geol. Engn.; 2 days/week, @ $25.00/day, for 2 weeks	100.00
Estimated cost all Wages, Stage I, Phase I, Crosscut Project	$1,420.00

Operating Materials and Supplies (Refer to individual costs for mining materials and supplies)

Mine rail, 25#; 200' (100' of track) on mine yard and waste dump @ $0.94/foot	$188.00
Track splices, 25# rail; $0.60/pair, $1.20/15' of track	9.60
Track bolts, nuts and track spikes, $0.05/foot of track	5.00
Ties, 4 x 4; 1/5 feet of track or $0.08/foot	8.00
2 Switch points, 25# rail; $15.00 ea.	30.00
Miscellaneous connections; 2" pipe fittings, 8" ventilation pipe fittings, electrical fixtures, etc.	25.00

Fuel and Oil

D-7 Caterpillar Tractor

Fuel Consumption	44.40
Oil Consumption	0.86

IH Tractor (Winch Truck)

Moving heavy equipment

Fuel Consumption	3.07
Oil Consumption	0.275

Winch Truck

Fuel Consumption	5.53
Oil Consumption	0.275

1953 F 600 Ford Dump Truck

Fuel Consumption	5.82
Oil Consumption	0.275

1955 Jeep Station Wagon

12 days @ $1.37/day	16.44

1948 Jeep Pick-up

12 days @ $1.37/day . . . . . $ 16.44

Estimated Cost, operating materials and supplies, Stage I, Phase I, Crosscut Project $358.98

Operating Equipment (Use-allowance, insurance and maintenance-repair)

Use-Allowance Calculation

Equipment in Use	Monthly Deprec.	Used 1 week	Used 2 weeks	Use Allowance
Jeep Station Wagon	$ 32.33		$16.16	$16.16
Jeep Pick-Up	6.67		3.33	3.33
Ford Dump Truck	33.33	$ 8.33		8.33
Caterpillar Tractor	183.33	45.83		45.83
IH Tractor	41.67	10.42		10.42
Semi-Trailer	25.83	6.45		6.45
Trailer, field house	14.17		7.08	7.08
				$97.60

Insurance on Equipment

Mining Equipment; $6.298/week for 2 weeks. . . . . $ 12.60

Vehicles; 5 of 6 vehicles covered chargeable to job $7.65/week for 2 weeks 15.30

Maintenance-Repair Allowance

Estimated 2.5% of total cost of Phase I

$2,167.93 x 0.025 . . . . . 54.20

Estimated Cost, operating equipment, Stage I, Phase I, Crosscut Project $179.70

Rehabilitation and Repairs . . . . . $ 0.00

New Buildings, Improvements and Installations

New building to house trammer, generator, and charging panel and to be used as a tool house $100.00

Excavate for, and pour concrete foundation for ventilation fan and enclosure 25.00

Note: Cost of access road and mine yard preparation in all other costs.

Estimated cost of new buildings, improvements and installations, Stage I, Phase I, Crosscut Project . . $125.00

Miscellaneous Expenditures (Industrial Accident Insurance, Payroll Taxes, and Unemployment Compensation)

Industrial Accident Insurance

6 laborers, 1 Geol. Engn. (All outside of mine)

$1,420.00 x 0.048 . . . . . $ 68.16

Payroll Taxes (2.25%)

$1,420.00 x 0.0225 . . . . . 31.95

Unemployment Compensation (2.7%)

$1,420.00 x 0.027 . . . . . 38.44

Estimated cost, miscellaneous expenditures, Stage I, Phase I, Crosscut Project $138.45

Contingencies . . . . . ?

Cost Summary by Major Cost Categories

Independent contracts	$ 0.00
Labor, supervision, consultants	1,420.00
Operating materials and supplies	358.98
Operating equipment	179.70
Rehabilitation and repairs	0.00
New Buildings, improvements and installations	125.00
Miscellaneous Expenditures	138.45
Contingencies	?
Estimated Total Cost Stage I, Phase I (Access road, mine yard and tunnel site preparation and general haulage of equipment and mining materials and supplies) Crosscut Project	$2,222.13

Phase II

Work Description

Drive 850' long crosscut to intersect footwall of shear zone 200' below the 75-level. Where timbered, crosscut to be 5' by 7' in the clear of timber. Cut two sidings approximately 300' and 600' from portal; refer to Appendix C for detail on siding dimensions. Maintain 1 foot of rise in 100 feet of crosscut, throughout entire length, for drainage. Refer to Appendix C for details on sidings.

Time Required

Two shifts/day, 2 miners/shift, will advance heading 10'/day, with the exception of sidings which will each require 7 days. Total estimated time for Phase II, 16 weeks, 2 days.

Labor Force

4 miners, contracting, except for sidings.
Non miner, days pay (outside man). Split-shift
Geol. Engn. (Part-Time)

Detailed Estimate of Costs

Independent Contracts . . . . . $ 0.00

Labor, Supervision and Consultants

790' of crosscut (850' less two 30' sidings) (14 weeks)

Labor, 4 miners, contracting; 790' @ $15.00/foot . . .	$11,850.00
Labor, non miner, days pay; $18.00/day (10' of advance/day); 790' @ $1.80/foot	1,422.00

2 sidings, each 30' long (14 days)

Labor, 4 miners, days pay; $22.50/day for 14 days . .	1,260.00
Labor, non miner, days pay; $18.00/day for 14 days . .	252.00
Technical Supervision, Geol. Engn; 3 days/month for 4 months; 12 days @ $25.00/day . . .	300.00
Estimated Cost, all Wages, Stage I, Phase II, Crosscut Project	$15,084.00

Operating Materials and Supplies

790' of crosscut

	Costs/foot	
Explosives	$ 2.395	
Detonating caps	0.09	
Fuse	0.72	
	$ 3.205/foot	
790' @ $3.205/foot		$2,531.95

2 Sidings (ea. 30' long, 10' wide and 8' high; 2,400 cu. ft.)

Explosives; 24 rounds total both sidings @ $11.975/round	$287.40	
Caps; 18/round for 24 rounds @ $0.025 ea. .	10.80	
Fuse; 180'/round for 24 rounds @ $0.02/foot	86.40	
		$ 384.60

Mine Timber, squared;
Estimated 20% of crosscut to be timbered;
850' x 0.20 - - - - 170' @ $5.78/foot . . . . . $ 982.60

790' of crosscut

	Costs/foot	
Mine rail, 25#	$ 1.88	
Track Splices, 25# rail	0.08	
Track bolts, nuts, and track spikes	0.05	
Ties, 4 x 4	0.08	
2" pipe, airline	0.56	
2" sleaves, airline	0.03	
8" ventilation pipe, metal	0.80	
1 1/4" plastic waterline	0.26	
	$ 3.74/foot	
790' @ $3.74/foot		$2,954.60

2 Sidings (ea. 30' long)

Mine rail, 25#; 240' of rail @ $0.94/foot .	$225.60	
Track splices, 25# rail	11.20	
4 switchpoints; $15.00 ea.	60.00	
Track bolts, nuts, and track spikes	6.00	
Ties, 4 x 4	9.60	
2" pipe, airline; $0.56/foot for 60 feet . .	33.60	
2" sleaves, airline	1.80	
8" ventilation pipe, metal	48.00	
1 1/4" plastic waterline	15.60	
		$ 411.40

Fuel and Oil

	Costs/foot	
Mine-Power Equipment		
790' Crosscut		
500' cfm GD Air Compressor		
Fuel Consumption; $12.025/day, 10' of advance/day	$ 1.20	
Oil Consumption; $0.55/day, 10' of advance/day	0.055	
12 1/2 KVA Generator		
Fuel Consumption; $9.21/day, 10' of advance/day	0.92	
Oil Consumption; $0.275/day, 10' of advance/day	0.027	
	$ 2.202/foot	
790' @ $2.202		$1,739.58

2 Sidings (14 days)

500' cfm GD Air Compressor

Fuel Consumption $12.025/day for 14 days	$168.35	
Oil Consumption; $0.55/day for 14 days	7.14	
12 1/2 KVA Generator		
Fuel Consumption; $9.21/day for 14 days	128.94	
Oil Consumption; $0.275/day for 14 days	3.85	
		$ 308.84

Vehicles

1955 Jeep Station Wagon; $8.19/week for 16 weeks	$131.04	
1949 Jeep Pick up; $16.38/week for 16 weeks	262.08	
1953 F 600 Ford Dump Truck; $0.65/day, $3.90/week for 16 weeks	62.40	
		$ 455.52

Estimated Cost, Operating Materials and Supplies, Stage I, Phase II, Crosscut Project $9,769.09

Operating Equipment (Use-Allowance, Insurance, and Maintenance-Repair Allowance)

Use-Allowance Calculation

Equipment in Use	Monthly Deprec.	4 month Use-Allowance
1955 Jeep Station Wagon	$ 32.33	$ 129.32
1949 Jeep Pick-Up	6.67	26.68
1954 F 600 Ford Dump Truck	33.33	133.32
500 cfm GD Air Compressor	108.33	433.32
12 1/2 KVA Generator	22.50	90.00
Mancha Trammer	65.80	263.20
Trammer Charging Panel	4.16	16.64
EIMCO Mucking Machine	33.33	133.32
6 Side Dump Mine Cars	25.00	100.00
1 Thor Air Leg Used	8.33	33.32
1 Ventilation Fan	12.50	50.00
Chain Saw	4.58	18.32
Portable Water Pump	2.25	9.00
Trailer (8 x 26) Field House	14.17	56.68
		$1,493.12

$\frac{\$1,493.12}{850'}$ $1.76/foot

Insurance on Equipment

Mining Equipment; $6.298/week for 16 weeks	$ 100.768
Vehicles; 3 chargeable to job @ $4.43/week for 16 weeks	70.88
	$ 171.648

$\frac{\$171.648}{850'}$ $0.20/foot

Maintenance-Repair Allowance

Estimated 2.5% of total cost of Phase II
$28,337.67 x 0.025 . . . . . $ 708.44

$\frac{\$708.44}{850'}$ $0.83/foot

Estimated Cost, Operating Equipment, Stage I, Phase II, Crosscut Project $2,373.21

Rehabilitation and Repairs . . . . . $ 0.00

New Buildings, Improvements and Installations . . . . . $ 0.00

Miscellaneous Expenditures (Industrial Accident Insurance, Payroll Taxes, and Unemployment Compensation)

Industrial Accident Insurance

790' Crosscut (14 weeks)

4 miners (8.0%) $11,850.00 x 0.08	$ 948.00
1 non miner (4.8%) $1,422.00 x 0.048	68.26
1 Geol. Engn. (8.0%) $300.00 x 0.08	24.00
	$1,040.26

2 Sidings (14 days)

4 miners (8%) $1,260.00 x 0.08	$ 100.80
1 non miner (4.8%) $252.00 x 0.048	12.10
	$1,153.16

Payroll Taxes

790' Crosscut (14 weeks) $13,572.00 x 0.025	$ 305.37
2 sidings (14 days) $1,512.00 x 0.025	34.02
	$ 339.39

Unemployment Compensation

790' Crosscut $13,572.00 x 0.027	$ 366.44
2 sidings $1,512.00 x 0.027	40.82
	$ 407.26

Estimated Cost, Miscellaneous Expenditures, Stage I, Phase II, Crosscut Project $1,899.81

Contingencies . . . . . ?

Cost Summary by Major Cost Categories

Independent Contracts	$ 0.00
Labor Supervision and Consultants	15,084.00
Operating Materials and Supplies	9,084.00
Operating Equipment	2,373.21
Rehabilitation and Repairs	0.00
New Buildings, Improvements and Installations	0.00
Miscellaneous Expenditures	1,899.81
Contingencies	?
Estimated Total Cost, Stage I, Phase II (850' of Crosscut, including two sidings), Crosscut Project . .	$29,126.11

Phase III

Work Description

Drive 400 feet of drift (275-level); possibly 2 headings. Maintain drift 5' x 7' in the clear of timber where timbered. 500 feet of longholing from 275-level drift.

Time Required

Two shifts/day, 2 miners/shift, will advance headings or heading 10'/day. Total estimated time for Phase III, 7 weeks.

Labor Force

4 miners, contracting
non miner (outside man) days pay
Geol. Engn. (Part-Time)

Detailed Estimate of Costs

Independent Contracts		$ 0.00
Labor, Supervision and Consultants	Costs/foot	
Labor, 4 miners, contracting	$15.00	
Labor, non miner, days pay; $18.00/day, 10' of advance/day	1.80	
Technical Supervision, Geol. Engn.; 2 days/week for 7 weeks; 14 days @ $25.00/day, $350.00 (400' of drift)	0.87	
Estimated Cost, All Wages, Stage I, Phase III, Crosscut Project	$17.67/foot	
400' @ $17.67/foot		$7,070.00

Operating Materials and Supplies	Costs/Foot of Advance
Explosives	$ 2.395
Detonating Caps	0.09
Fuse	0.72
Mine timber, squared	5.78
Mine rail, 25#	1.88
Track splices	0.08
Track nuts, bolts, track spikes	0.05
2 switchpoints; 25# rail; $15.00 ea.--$30.00/400 feet of drift	0.075
Ties, 4 x 4	0.08
2" pipe, airline	0.56
2" sleaves, airline	0.03
8" ventilation pipe, metal	0.80
1 1/4" plastic water line	0.26

Fuel and Oil

Mine-Power Equipment

500 cfm GD Air Compressor

Fuel Consumption; $12.025/day (10' of advance/day)	1.20
Oil Consumption; $0.550/day (10' of advance/day)	0.055

	Costs/Foot of Advance
12 1/2 KVA Generator	
Fuel Consumption; $9.21/day (10' of advance/day)	$ 0.92
Oil Consumption; $0.275/day (10' of advance/day)	0.03
Vehicles	
1955 Jeep Station Wagon; $1.365/day, 10' of advance/day	0.136
1948 Jeep Pick-Up; $2.73/day, 10' of advance/day	0.273
1953 F 600 Ford Dump Truck; $0.65/day, 10' of advance/day	0.065
Estimated Cost, Operating Materials and Supplies, Stage I, Phase III, Crosscut Project	$15.484/foot
400' @ $15.464/foot	$6,185.60

Operating Equipment (Use-Allowance, Insurance, and Maintenance-Repair Allowance)

Use-Allowance Calculation

Equipment in Use	Monthly Deprec.	7 week Use-Allowance
Jeep Station Wagon	$ 32.33	$ 56.54
Jeep Pick-Up	6.67	11.67
Ford Dump Truck	33.33	58.33
Mancha Trammer	65.80	115.20
Battery Charger	4.16	7.28
Mucking Machine	33.33	58.33
Thor Airleg (used)	8.33	14.58
Air Compressor	108.33	189.58
Generating Plant	22.50	39.39
6 side dump mine cars	25.00	43.75
Chain Saw	4.58	8.02
Ventilation Fan	12.50	21.88
Portable Water Pump	2.25	3.94
Trailer House	14.17	24.79
		$ 653.28

$\frac{\$653.28}{400'}$ $1.63/foot

Insurance on Equipment

Mining Equipment; $6.298/week for 7 weeks	$ 44.086
Vehicles; 3 chargeable to job @ $4.43/week for 7 weeks .	31.01
	$ 75.096

$\frac{\$75.096}{400'}$ $0.19/foot

Maintenance-Repair Allowance

Estimated 2.5% of total cost of Phase III $15,079.60 x 0.025	$ 376.99

$\frac{\$376.99}{400'}$ $0.94/foot

Estimated Cost and Cost/Foot, Operating Equipment, Stage I, Phase III, Crosscut Project	$ 2.77/foot
400' @ $2.76/foot	$1,104.00

Rehabilitation and Repairs . . . . . $ 0.00

New Buildings, Improvements and Installations . . . . . $ 0.00

Miscellaneous Expenditures (Industrial Accident Insurance, Payroll Taxes, Unemployment Compensation and Analytical Work)

Industrial Accident Insurance

4 miners (8.0%) $6,000.00 x 0.08	$ 480.00
non miner (4.8%) $720.00 x 0.048	34.56
Geol. Engn. (8.0%) $350.00 x 0.08	36.00
	$ 550.56

$\frac{\$550.56}{400'}$ $1.39/foot

Payroll Taxes (Only $706.50 of each miner's wage for Phase III is taxable)

4 miners; 4 x $706.50 x 0.0225	$ 63.58
non miner; $720.00 x 0.0225	16.20
Geol. Engn.; $350.00 x 0.0225	7.87
	$ 87.65

$\frac{\$87.65}{400'}$ $0.22/foot

Unemployment Compensation

$7,070.00 x 0.027 . . . . . $ 190.89

$\frac{\$190.89}{400'}$ $0.48/foot

Analytical Work

80 assays for lead, zinc, and copper, 1 assay/5' of drift; $4.50 ea. . . . . $ 360.00

$\frac{\$360.00}{400'}$ $0.90/foot

Estimated Cost and Cost/foot, Miscellaneous Expenditures, Stage I, Phase III, Crosscut Project . . . . . $ 2.99/foot

400' @ $2.99/foot $1,196.00

Contingencies . . . . . ?

Cost Summary by Major Cost Categories

Independent Contracts	$ 0.00
Labor Supervision and Consultants	7,070.00
Operating Materials and Supplies	6,185.60
Operating Equipment	1,104.00
Rehabilitation and Repair	0.00
New Buildings, Improvements and Installations	0.00
Miscellaneous Expenditures	1,196.00
Contingencies	?
	$15,555.00
500' of Longholing @ $1.00/foot	500.00
Estimated Total Cost, Stage I, Phase III (400' of drift and 500' of longholing), Crosscut Project . . .	$16,055.00

Phase IV

Work Description

Drive 100' of Crosscut on basis of longhole information within shear zone one 275-level. Where timbered maintain crosscut 5' x 7' in the clear of timber. Possibly 4 headings.

Time Required

2 shifts/day, 2 miners/shift, will advance heading or headings 10'/day

Total Estimated Time . . . . . 2 weeks

Labor Force

4 miners, contracting
non miners, days pay
Geol. Engn. (Part-Time)

Detailed Estimate of Costs

Independent Contracts . . . . . $ 0.00

Labor Supervision and Consultants	Cost/foot
Labor, 4 miners, contracting	$15.00
Labor, non miner, days pay	1.80
Technical supervision, Geol. Engn.; 2 days/ week for 2 weeks; 2 days @ $25.00/day (100' of Crosscut)	1.00
	$17.80/foot
100' @ $17.80/foot	$1,780.00

Operating Materials and Supplies	Cost/foot
Explosives	$ 2.39
Detonating Caps	0.09
Fuse	0.72
Mine Timber, squared	5.78
Mine Rail, 25#	1.88
Track Splices, 25# rail	0.08
Track bolts, nuts and track spikes	0.05
Ties, 4 x 4	0.08
4 Switch points, $15.00 ea. (4 headings) 100' of Crosscut	0.60

Fuel and Oil

Mine Power Equipment (Same costs as Phase III, Stage I)

500 cfm GD Air Compressor

Fuel Consumption	1.20
Oil Consumption	0.055

12 1/2 KVA Generator

Fuel Consumption	0.92
Oil Consumption	0.03

Vehicles

1955 Jeep Station Wagon	0.136
1948 Jeep Pick-Up	0.273
1953 F 600 Ford Dump Truck	0.065

Estimated Cost and Cost/Foot, Operating Materials and Supplies, Stage I, Phase IV, Crosscut Project $14.34/foot

100' @ $14.34/foot $1,434.40

Operating Equipment (Use-Allowance, Insurance and Maintenance-Repair Allowance)

Use-Allowance Calculation

Equipment in Use	Monthly Deprec.	2 week Use Allowance
Jeep Station Wagon	$ 32.33	$ 16.16
Jeep Pick-Up	6.67	3.33
Ford Dump Truck	33.33	16.67
Mancha Trammer	65.80	32.90
Battery Charger	4.16	2.08
Mucking Machine	33.33	16.67
Thor Air Leg (Used)	8.33	4.16
Air Compressor	108.33	54.16
Generating Plant	22.50	11.25
6 Side Dump Mine Cars	25.00	12.50
Chain Saw	4.58	2.29
Ventilator Fan	12.50	6.25
Portable Water Pump	2.25	1.13
Trailer, house	14.17	7.08
		$ 186.63

$186.63 / 100' $1.87/foot

Insurance on Equipment

Mining Equipment; $6.298/week for 2 weeks . . . . . $ 12.596

Vehicles; 3 chargeable to job @ $4.43/week for 2 weeks . 8.86

$ 21.456

$21.456 / 100' $0.21/foot

Maintenance-Repair Allowance

Estimated 2.5% of total cost of Phase IV
$3,495.40 x 0.025 . . . . . $ 89.88

$89.88 / 100' $0.90/foot

Estimated Cost and Cost/Foot, Operating Equipment, Stage I, Phase IV, Crosscut Project . . . . . $ 2.98/foot

100' @ $2.98/foot . . . . . $ 298.00

Rehabilitation and Repair . . . . . $ 0.00

New Buildings, Improvements and Installations . . . . . $ 0.00

Miscellaneous Expenditures (Industrial Accident Insurance, Payroll Taxes, Unemployment Compensation and Analytical Work)

Industrial Accident Insurance

4 miners (8.0%) $1,500.00 x 0.08 . . . . . $ 120.00
1 non miner (4.8%) $180.00 x 0.048 . . . . . 8.64
1 Geol. Engn. (8.0%) $100.00 x 0.08 . . . . . 8.00
$ 136.64

$136.64 / 100' $1.37/foot

Payroll Taxes

$280.00 x 0.0225 . . . . . $ 6.30

$\frac{\$6.30}{100'}$ $0.06/foot

Unemployment Compensation

$1,780.00 x 0.027 . . . . . $ 48.06

$\frac{\$48.06}{100'}$ $0.48/foot

Analytical Work

20 Assays for lead, zinc and copper; 1 assay/5' of Crosscut; $4.50 ea. . . . . $ 90.00

$\frac{\$90.00}{100'}$ $0.90/foot

Estimated Cost and Cost/Foot, Miscellaneous Expenditures, Stage I, Phase IV, Crosscut Project . . $ 2.81/foot

100' @ $2.81 . . . . . $ 281.00

Contingencies . . . . . ?

Costs Summary by Major Cost Categories

Independent Contracts	$ 0.00
Labor, Supervision and Consultants	1,780.00
Operating Materials and Supplies	1,434.40
Operating Equipment	298.00
Rehabilitation and Repair	0.00
New Buildings, Improvements and Installations	0.00
Miscellaneous Expenditures	281.00
Contingencies	?
Estimated Total Cost of Stage I, Phase IV, (100' of Crosscut), Crosscut Project	$3,793.40

Stage II (To be undertaken only if findings in Stage I give sufficient indication to warrant a continuation of the exploration project)

Phase I

Work Description

Drive 110 feet of timbered raise on the strongest mineralization disclosed by work accomplished in Stage I, Phases III and IV. Raise to be two-compartment; 6' x 10' outside of timber.

Time Required

Two shifts/day, 2 miners/shift underground; will advance raise heading 12 feet/day. Two days plus to get miners of sill; 9 days to drive raise; plus 1 day. Two weeks; 12 working days.

Labor Force

4 miners, contracting
1 non miner, outside man (split/shift)
Geol. Engn. (Part-Time)

Detailed Estimate of Costs, Stage II, Phase I, Crosscut Project

Independent Contracts . . . . . $ 0.00

Labor, Supervision, and Consultants

Labor, 4 miners, contracting; $18.00/foot for 110 feet . .	$1,980.00
Labor, non miner, days pay; $18.00/day for 12 days	216.00
Technical Supervision, Geol. Engn.; 6 days/week for 2 weeks; 12 days @ $25.00/day	300.00
Estimated Cost, All Wages, Stage II, Phase I, Crosscut Project	$2,496.00

$\frac{\$2,496.00}{110'}$ $22.69/foot

Operating Materials and Supplies	Costs/Foot of Advance
Explosives; $11.975/50#, 50#/6' round	$ 2.00
Detonating Caps; waterproofed, $0.45/round, 6'/round	0.08
Fuse	0.60

Mine Timber, squared (raise set, 6'round)

	Board Feet
6 posts, 6 x 6, 5'-6" long - - - - - -	99.0
1 girt, 6 x 6, 4'-0" long - - - - - -	12.0
2 side plates, 6 x 6, 9'-0" long - - -	54.0
2 end plates, 6 x 6, 4'-0" long - - -	24.0
Lagging:	
Chute;	
14, 2 x 12, 6'-0" long - - - - - -	168.0
2, 2 x 8, 6'-0" long - - - - - -	16.0
Manway;	
12, 2 x 12, 4'-0" long - - - - - -	96.0
6, 2 x 12, 4'-6" long - - - - - -	54.0
Timber Chute;	
2, 2 x 6, 6'-0" long - - - - - - -	12.0
1, 2 x 12, 6'-0" long - - - - - -	12.0
	547.0 board feet

547.0 brd. ft./round of 6', @ $75.00/1000 board feet . . . . . $ 6.84/ft.

Ladders, wedges, and misc. timber for blocking	0.05
2" pipe, airline	0.56
2" sleaves, airline	0.03
8" ventilation pipe, metal	0.80
1 1/4" plastic water line	0.26

Fuel and Oil

Mine-Power Equipment

500 cfm GD Air Compressor

Fuel Consumption; $6.66/day (12' of advance/day)	0.55
Oil Consumption; $0.55/day (12' of advance/day)	0.05

12 1/2 KVA Generator

Fuel Consumption; $9.21/day (12' of advance/day)	0.77
Oil Consumption; $0.275/day (12' of advance/day)	0.02

Vehicles	Costs/Foot of Advance
1955 Jeep Station Wagon; $1.365/day (12' of advance/day)	$ 0.133
1948 Jeep Pick-Up; $2.73/day (12' of advance/day)	0.277
1953 F 600 Ford Dump Truck; $0.65/day (12' of advance/day)	0.054
Estimated Cost, and Cost/Foot, Operating Materials and Supplies, Stage II, Phase I, Crosscut Project	$13.07
110' @ $13.07/foot	$1,437.70

Operating Equipment (Use-Allowance, Insurance and Maintenance-Repair Allowance)

Use-Allowance Calculation

Equipment in Use	Monthly Deprec.	2 week Use-Allowance
Jeep Station Wagon	$ 32.33	$ 16.16
Jeep Pick-Up	6.67	3.33
Ford Dump Truck	33.33	16.67
Mancha Trammer	65.80	32.90
Battery Charger	4.16	2.08
Air Tugger	4.58	2.29
Thor Airleg (used)	8.33	4.16
Air Compressor	108.33	54.16
Generating Plant	22.50	11.25
6 side dump mine cars	25.00	12.50
Chain Saw	4.58	2.29
Ventilation Fan	12.50	6.25
Portable Water Pump	2.25	1.13
Trailer House	14.17	7.08
		$ 172.25

$\frac{\$172.25}{110'}$ $1.566/foot

Insurance on Equipment

Mining Equipment	$ 12.596
Vehicles; 3 chargeable to job	8.86
	$ 21.456

$\frac{\$21.456}{110'}$ $0.195/foot

Maintenance-Repair Allowance

Estimated 2.5% of total cost of Phase I, Stage II

$4,498.18 x 0.025 . . . . . $ 112.45

$\frac{\$112.45}{110'}$ $1.02/foot

Estimated Cost and Cost/Foot, Operating Equipment, Stage II, Phase I, Crosscut Project . . . . . $ 306.16

$\frac{\$306.16}{110'}$ $2.78/foot

Rehabilitation and Repair . . . . . $ 0.00

New Buildings, Improvements and Installations . . . . . $ 0.00

Miscellaneous Expenditures (Industrial Accident Insurance, Payroll Taxes, Unemployment Compensation and Analytical Work)

Industrial Accident Insurance

4 miners (8.0%) $1,980.00 x 0.08	$ 158.40
non miner (4.8%) $216.00 x 0.048	10.37
Geol. Engn. (8.0%) $300.00 x 0.08	24.00
	$ 192.77

$\frac{\$192.77}{110'}$ $1.752/foot

Payroll Taxes (Wages earned by 4 miners not taxable)

$516.00 x 0.0225 . . . . . $ 11.61

$\frac{\$11.61}{110'}$ $0.155/foot

Unemployment Compensation

$2,496.00 x 0.027 . . . . . $ 67.392

$\frac{\$67.392}{110'}$ $0.613/foot

Analytical Work

22 assays for lead, zinc and copper; 1/5' of raise @ $4.50 ea. . . . . $ 99.00

$\frac{\$99.00}{110'}$ $0.90/foot

Estimated Cost and Cost/Foot, Operating Equipment, Stage II, Phase I, Crosscut Project . . . . . $ 370.77

$\frac{\$370.77}{110'}$ $3.77/foot

Contingencies . . . . . ?

Cost Summary by Major Cost Categories

Independent Contracts	$ 0.00
Labor, Supervision and Consultants	2,496.00
Operating Materials and Supplies	1,437.70
Operating Equipment	306.16
Rehabilitation and Repairs	0.00
New Buildings, Improvements and Installations	0.00
Miscellaneous Expenditures	370.77
Contingencies	?
Estimated Total Cost, Stage II, Phase I (110' of timbered raise), Crosscut Project	$4,610.63

Phase II

Work Description

Prepare 175-level raise station; timbered. Excavate approximately 960 cu. ft. of rock. Refer to Appendix D for details on raise station.

Time Required

Two shifts/day, 2 miners/shift; will cut station in 4 days.

Labor Force

4 miners, days pay
non miner, days pay
Geol. Engn. (Part-Time)

Detailed Estimate of Costs, Stage II, Phase II, Crosscut Project

Independent Contracts . . . . . $ 0.00

Labor, Supervision and Consultants

Labor, 4 miners, days pay; $22.50 ea./day for 4 days . . .	$ 360.00
Labor, non miner, days pay; $18.00/day for 4 days	72.00
Technical Supervision, Geol. Engn.; $25.00/day for 2 days.	50.00
Estimated Cost, All Wages, Stage II, Phase II, Crosscut Project	$ 482.00

Operating Materials and Supplies

Explosives; 4 rounds, 50#/round @ $11.975/round	$ 47.90
Detonating Caps; 4 rounds, @ $0.45/round	1.80
Fuse; 180'/round for 4 rounds; 720' @ $0.02/ft.	14.40

Mine Timber, squared;

	Board Feet
10 posts, 8 x 8, 7'-4" long - - - - - - - - - -	442.89
2 caps, 8 x 8, 8'-0" long - - - - - - - - - -	85.76
1 cap, 8 x 8, 10'-0" long - - - - - - - - - -	53.60
2 caps, 8 x 8, 6'-0" long - - - - - - - - - -	64.32
2 girts, 6 x 6, 7'-0" long - - - - - - - - - -	42.00
4 girts, 6 x 6, 5'-0" long - - - - - - - - - -	60.00
2 girts, 6 x 6, 6'-0" long - - - - - - - - - -	36.00
3 sill stringers, 6 x 6, 12'-0" long - - - -	108.00
Lagging;	
Sides,	
28, 2 x 12, 5'-4" long - - - - - - - - - -	298.48
14, 2 x 12, 6'-4" long - - - - - - - - - -	177.24
14, 2 x 12, 7'-4" long - - - - - - - - - -	205.24
Back,	
32, 3 x 12, 5'-4" long - - - - - - - - - -	511.68
	2,085.21 brd. ft.

2,085.21 brd. ft. @ $75.00/1000 brd. ft.	$ 156.39
Mine rail, 25#; 40' @ $0.94/ft.	37.60
Mine rail, 25# (for Grizzly); 20' in 5' lengths @ $0.94/ft.	18.80
Track splices, 25# rail; for 20' of track	1.60
Track bolts, nuts, and track spikes; for 20' of track . .	1.00
Ties, 4 x 4	1.60
2" pipe, airline	11.20
2" sleaves, airline	1.20
8" ventilation pipe, metal	16.00
1 1/4" plastic water line	5.20

Fuel and Oil

Mine-Power Equipment

500 cfm GD Air Compressor

Fuel Consumption; $6.66/day for 4 days	26.64
Oil Consumption; $0.55/day for 4 days	2.20

12 1/2 KVA Generator

Fuel Consumption; $9.21/day for 4 days	$ 36.84
Oil Consumption; $0.275/day for 4 days	1.10

Vehicles

1955 Jeep Station Wagon; $1.365/day for 4 days	5.46
1948 Jeep Pick-Up; $2.73/day for 4 days	10.92
1953 Ford Dump Truck; $0.65/day for 4 days	2.60
Estimated Cost, Operating Materials and Supplies, Stage II, Phase II, Crosscut Project	$ 400.45

Operating Equipment (Use-Allowance, Insurance, and Maintenance-Repair Allowance)

Use-Allowance Calculation

Equipment in Use	Monthly Deprec.	Weekly Deprec.	4 day Use Allowance
Jeep Station Wagon	$ 32.33	$ 8.08	$ 5.41
Jeep Pick-Up	6.67	1.67	1.12
Ford Dump Truck	33.33	8.33	5.58
Mancha Trammer	65.80	16.45	11.02
Battery Charger	4.16	1.04	0.70
Thor Airleg (used)	8.33	2.08	1.40
Air Compressor	108.33	27.08	18.14
Generating Plant	22.50	5.62	3.77
6 side dump mine cars	25.00	5.25	4.19
1 end dump mine car	2.50	0.62	0.42
Chain Saw	4.58	1.14	0.76
Ventilation Fan	12.50	3.12	2.09
Portable Water Pump	2.25	0.56	0.37
Air Tugger	4.58	1.14	0.76
Trailer House	14.17	3.56	2.39
			$ 58.12

Insurance on Equipment

Mining Equipment; $6.298/week (4 days, 0.67)	$ 4.22
Vehicles; 3 chargeable to job; $4.43/week x 0.67	2.97
	$ 7.19

Maintenance-Repair Allowance

Estimated 2.5% of total cost of Stage II, Phase II

$1,017.77 x 0.025	$ 25.44
Estimated Cost, Operating Equipment, Stage II, Phase II, Crosscut Project	$ 90.75

Rehabilitation and Repairs	$ 0.00
New Buildings, Improvements and Installations	$ 0.00

Miscellaneous Expenditures (Industrial Accident Insurance, Payroll Taxes Unemployment Compensation and Analytical Work)

Industrial Accident Insurance

4 miners (8.0%) $360.00 x 0.08	$ 28.80
1 non miner (4.8%) $72.00 x 0.048	3.46
Geol. Engn. (8.0%) $50.00 x 0.08	4.00
	$ 36.26

Payroll Taxes (Wages of 4 miners not taxable)

$122.00 x 0.0225	$ 2.74

Unemployment Compensation

$482.00 x 0.027	$ 13.01

Analytical Work

4 assays for lead, zinc and copper; 1/5' of station; $4.50 ea.	$ 18.00
Estimated Cost, Miscellaneous Expenditures, Stage II, Phase II, Crosscut Project	$ 70.01
Contingencies	?

Cost Summary by Major Cost Categories

Independent Contracts	$ 0.00
Labor, Supervision and Consultants	482.00
Operating Materials and Supplies	400.45
Operating Equipment	90.75
Rehabilitation and Repair	0.00
New Buildings, Improvements and Installations	0.00
Miscellaneous Expenditures	70.01
Contingencies	?
Estimated Total Cost, Stage II, Phase II (175-level raise station), Crosscut Project	$1,043.21

Phase III

Work Description

Drive 400' of timbered drift on 175-level (raise level) on 1 and possibly 2 headings. Maintain drift 5' x 7' in the clear of timber. Also 500' of longholing.

Time Required

Two shifts/day, 2 miners/shift; will advance heading or headings 10'/day. Time required---40 days or 7 weeks.

Labor Force

4 miners, contracting
1 non miner, days pay (split-shift)
Geol. Engn. (Part-Time)

Detailed Estimate of Costs, Stage II, Phase III

Independent Contracts	$ 0.00
Labor, Supervision and Consultants	
Labor, 4 miners, contracting; $19.00/ft. x 400'	$7,600.00
Labor, non miner, days pay; $18.00/day; $1.80/ft. x 400' .	720.00
Technical Supervision, Geol. Engn.; 2 days/week for 7 weeks; 14 days @ $25.00/day	350.00
Estimated Cost, All Wages, Stage II, Phase III, Crosscut Project	$8,670.00

$\frac{\$8,670.00}{400'}$ $21.42/foot

Operating Materials and Supplies

	Costs/Foot
Explosives	$ 2.39
Detonating Caps	0.09
Fuse	0.72
Mine Timber, squared	5.78
Mine rail, 25#	1.88
Track Splices, 25# rail	0.08
Track nuts, bolts and track spikes	0.05
Ties, 4 x 4	0.08
2" pipe, airline	0.56
2" sleaves, airline	0.03
8" ventilation pipe, metal	0.80
1 1/4" plastic waterline	0.26

Fuel and Oil

Mine-Power Equipment (Costs similar to Stage I, Phase III)

500 cfm GD Air Compressor

Fuel Consumption	1.20
Oil Consumption	0.055

12 1/2 KVA Generator

Fuel Consumption	0.92
Oil Consumption	0.03

Vehicles (Costs similar to Stage I, Phase III)

1955 Jeep Station Wagon	0.136
1948 Jeep Pick-Up	0.273
1953 Ford Dump Truck	0.065
Estimated Cost, Operating Materials and Supplies, Stage II, Phase III, Crosscut Project	$15.394/foot
400' x $15.394/foot	$6,157.60

Operating Equipment (Use-Allowance, Insurance and Maintenance-Repair Allowance)

Use-Allowance Calculation

Equipment in Use	Monthly Deprec.	7 week Use-Allowance
Jeep Station Wagon	$ 32.33	$ 56.54
Jeep Pick-Up	6.67	11.67
Ford Dump Truck	33.33	58.33
Mancha Trammer	65.80	115.20
Battery Charger	4.16	7.28
Mucking Machine	33.33	58.33
Thor Airleg (used)	8.33	14.58

Use-Allowance Calculation (Continued)

Equipment in Use	Monthly Deprec.	7 week Use-Allowance
Air Compressor	$108.33	$ 189.58
Generating Plant	22.50	39.39
6 side dump mine cars	25.00	43.75
Chain Saw	4.58	8.02
Ventilation Fan	12.50	21.88
Portable Water Pump	2.25	3.94
Air Tugger	4.58	8.02
2 end dump mine cars	5.00	8.75
Trailer House	14.17	24.79
		$ 670.05

Insurance on Equipment

Mining Equipment; (Insured for 3 years, annual premium decreases on December 9, 1957, or within Phase III, Stage II, Crosscut Project)

2 weeks @ $6.298/week. . . . . $ 12.596
5 weeks @ $4.725/week. 23.625
7 weeks

Vehicles; 3 chargeable to job, $4.43/week for 7 weeks . 31.01
$ 67.231

Maintenance-Repair Allowance

Estimated 2.5% of total cost of Stage II, Phase III

$16,861.60 x 0.025 . . . . . $ 421.54

Estimated Cost, Operating Equipment, Stage II, Phase III, Crosscut Project $1,158.82

$1,158.82 / 400' $2.90/foot

Rehabilitation and Repairs . . . . . $ 0.00

New Buildings, Improvements and Installations . . . . . $ 0.00

Miscellaneous Expenditures (Industrial Accident Insurance, Payroll Taxes, Unemployment Compensation and Analytical Work)

Industrial Accident Insurance

4 miners (8.0%) $7,600.00 x 0.08 . . . . . $ 608.00
1 non miner (4.8%) $720.00 x 0.048 . . . . . 34.56
Geol. Engn. (8.0%) $350.00 x 0.08 . . . . . 36.00
$ 678.56

Payroll Taxes (Wages of 4 miners not taxable)

$1,070.00 x 0.0225 . . . . . $ 24.075

Unemployment Compensation

$8,670.00 x 0.027 . . . . . $ 234.09

Analytical Work

80 assays for lead, zinc and copper; 1/5' of drift; $4.50 ea. . . . . $ 360.00

Estimated Cost, Miscellaneous Expenditures, Stage II, Phase III, Crosscut Project $1,296.72

$1,296.72 / 400' $3.24/foot

Contingencies . . . . . ?

Cost Summary by Major Cost Categories

Independent Contracts	$ 0.00
Labor, Supervision and Consultants	8,670.00
Operating Materials and Supplies	6,157.60
Operating Equipment	1,158.82
Rehabilitation and Repair	0.00
New Buildings, Improvements and Installations	0.00
Miscellaneous Expenditures	1,296.72
Contingencies	?
	$17,283.14

500' of longholing @ $1.00/foot 500.00

Estimated Total Cost, Stage II, Phase III (400' of timbered drift plus 500' of longholing on the 175-level (raise level)), Crosscut Project $17,783.14

Phase IV

Work Description

Drive 100' of timbered crosscut on 175-level (raise level); possibly 4 headings. Maintain crosscut 5' x 7' in the clear of timber. Crosscutting to be on basis of longhole information.

Time Required

Two shifts/day, 2 miners/shift; will advance crosscut heading or headings 10'/day. Time Required----2 weeks.

Labor Force

4 miners, contracting
1 non miner, days pay
Geol. Engn. (Part-Time)

Detailed Estimate of Costs, Stage II, Phase IV, Crosscut Project

Independent Contracts . . . . . $ 0.00

Labor, Supervision and Consultants

Labor, 4 miners, contracting; $19.00/foot for 100 feet . . $1,900.00

Labor, non miner, days pay; $18.00/day, $1.80/foot for 100 feet 180.00

Technical Supervision, Geol. Engn.; 2 days/week for 2 weeks; 4 days @ $25.00/day 100.00

Estimated Cost and Cost/Foot, All Wages, Stage II, Phase IV, Crosscut Project $2,180.00

$\frac{\$2,180.00}{100'}$ $21.80/foot

Operating Materials and Supplies	Costs/Foot of Advance
Explosives	$ 2.395
Detonating Caps	0.09
Fuse	0.72
Mine Timber, squared	5.78
Mine Rail, 25#	1.88

Operating Materials and Supplies (Continued)	Costs/Foot of Advance
Track Splices, 25# rail	$ 0.08
Track bolts, nuts, and track spikes	0.05
Ties, 4 x 4	0.08
4 switchpoints; $15.00 ea., $60.00/100' of crosscut	0.60

Fuel and Oil

Mine-Power Equipment (same costs/foot as Stage I, Phase IV)

500 cfm GD Air Compressor	
Fuel Consumption	1.20
Oil Consumption	0.055
12 1/2 KVA Generator	
Fuel Consumption	0.92
Oil Consumption	0.03
Vehicles	
1955 Jeep Station Wagon	0.1365
1948 Jeep Pick-Up	0.273
1953 Ford Dump Truck	0.065
Estimated Cost and Cost/Foot, Operating Materials and Supplies, Stage II, Phase IV, Crosscut Project	$14.344/foot
100' @ $14.344/foot	$1,434.40

Operating Equipment (Use-Allowance, Insurance and Maintenance-Repair Allowance)

Use-Allowance Calculation

Equipment in Use	Monthly Deprec.	2 week Use-Allowance
Jeep Station Wagon	$ 32.33	$ 16.16
Jeep Pick-Up	6.67	3.33
Ford Dump Truck	33.33	16.67
Mancha Trammer	65.80	32.90
Battery Charger	4.16	2.08
Mucking Machine	33.33	16.67
Thor Airleg (used)	8.33	4.16
Air Compressor	108.33	54.16
Generating Plant	22.50	11.25
6 side dump mine cars	25.00	12.50
Chain Saw	4.58	2.29
Ventilation Fan	12.50	6.25
Portable Water Pump	2.25	1.13
Air Tugger	4.58	2.29
2 end dump mine cars	5.00	2.50
Trailer House	14.17	7.08
		$ 191.42

$\frac{\$191.42}{100'}$ $1.91/foot

Insurance on Equipment

Mining Equipment; $4.725/week for 2 weeks . . . . . $ 9.45

Vehicles; 3 chargeable to job, $4.43/week for 2 weeks . 8.86

$ 18.31

$\frac{\$18.31}{100'}$ $0.18/foot

Maintenance-Repair Allowance

Estimated 2.5% of total cost of Stage II, Phase IV

$4,158.33 x 0.025 . . . . . $ 103.96

$\frac{\$103.96}{100'}$ $1.04/foot

Estimated Cost, Operating Equipment, Stage II, Phase IV, Crosscut Project . . . . . $ 313.69

Rehabilitation and Repairs . . . . . $ 0.00

New Buildings, Improvements and Installations . . . . . $ 0.00

Miscellaneous Expenditures (Industrial Accident Insurance, Payroll Taxes, Unemployment Compensation and Analytical Work)

Industrial Accident Insurance

4 miners (8.0%) $1,900.00 x 0.08 . . . . . $ 152.00
1 non miner (4.8%) $180.00 x 0.048 . . . . . 8.64
Geol. Engn. (8.0%) $100.00 x 0.08 . . . . . 8.00
$ 168.64

$\frac{\$168.64}{100'}$ $1.69/foot

Payroll Taxes (Wages of 4 miners not taxable)

$280.00 x 0.0225 . . . . . $ 6.70

$\frac{\$6.70}{100'}$ $0.07/foot

Unemployment Compensation

$2,180.00 x 0.027 . . . . . $ 68.86

$\frac{\$68.86}{100'}$ $0.69/foot

Analytical Work

20 assays for lead, zinc and copper; 1/5' of crosscut; $4.50 ea. . . . . $ 90.00

$\frac{\$90.00}{100'}$ $0.90/foot

Estimated Cost and Cost/Foot, Miscellaneous Expenditures, Stage II, Phase IV, Crosscut Project . . $ 334.20

$\frac{\$334.20}{100'}$ $3.34/foot

Contingencies . . . . . ?

Cost Summary by Major Cost Categories

Independent Contracts	$ 0.00
Labor, Supervision and Consultants	2,180.00
Operating Materials and Supplies	1,434.40
Operating Equipment	313.69
Rehabilitation and Repairs	0.00
New Buildings, Improvements and Installations	0.00
Miscellaneous Expenditures	334.20
Contingencies	?
Estimated Total Cost, Stage II, Phase IV (100' of timbered crosscut on 175-level (raise-level)), Crosscut Project	$4,262.29

A Tabulation of Estimated Costs and Time Scheduling by Phases, Crosscut Project

Stage I (Based on 6 day work week; two shifts/day)

Phase	Work Description	Time Required, Shifts/Day, and Labor Force	Estimated Cost
I	Construction of access road; preparation of 275/level mine yard, tunnel site and surface installation	2 weeks, 1 shift/day, 6 men plus Tech. Supr.	$ 2,222.13
II	850' crosscut plus two 30' sidings	16 weeks and 2 days, two shifts/day, 5 men plus Tech. Supr.	$29,126.11
III	400' of timbered drift off 275-level crosscut on one or two headings (5' x 7' inside of timber); plus 500' of longholing	7 weeks, two two shifts/day, 5 men plus Tech. Supr.	$16,055.60
IV	100' of timbered crosscut on basis of longhole information; possibly 4 headings (same dimension as timbered drift)	2 weeks, two shifts/day, 5 men plus Tech. Supr.	$ 3,793.40
		27 weeks 2 days	$51,197.24
	Estimated Cost to Western America of Montana, Inc., of mining equipment not on hand		$ 2,467.80
	Estimated Cost of Stage I of Crosscut Project		$53,665.04

Note: If starting date is May 1, 1957, Stage I of Crosscut Project will be completed on or about November 5, 1957.

Stage II (Based on same time scheduling as above; also dimensions of workings are the same)

Phase	Work Description	Time Required, Shifts/day, and Labor Force	Estimated Cost
I	Drive 110' of timbered raise on best show disclosed by work in Stage I, Phases III and IV. Raise 6' x 10' outside of timber.	2 weeks, two shifts/day, 5 men plus Tech. Supr.	$ 4,610.63
II	Preparation of 175-level raise station	4 days, two shifts/day, 5 men plus Tech. Supr.	$ 1,043.21
III	Drive 400' of timbered drift on 175-level on one or two headings; plus 500' of longholing	7 weeks, two shifts/day, 5 men plus Tech. Supr.	$17,783.14
IV	Drive 100' of timbered crosscut on basis of long-hole information; possibly 4 headings.	2 weeks, two shifts/day 5 men plus Tech. Supr.	$ 4,262.29
		11 weeks 4 days	$27,699.27
	Estimated Cost to Western America of Montana, Inc., of mining equipment not on hand		$ 116.40
	Estimated Cost of Stage II of Crosscut Project . . .		$27,815.67

Note: Stage II should be completed on or about January 21, 1958.

Cost Summary, Crosscut Project

Stage I	$53,665.04
Stage II	27,815.67
Estimated Total Cost of Crosscut Project	$81,480.71

---

7. a. Yes. Western America of Montana, Inc., has budgeted $50,000.00 for the Morning-Midnight Exploration Project.

b. Money.

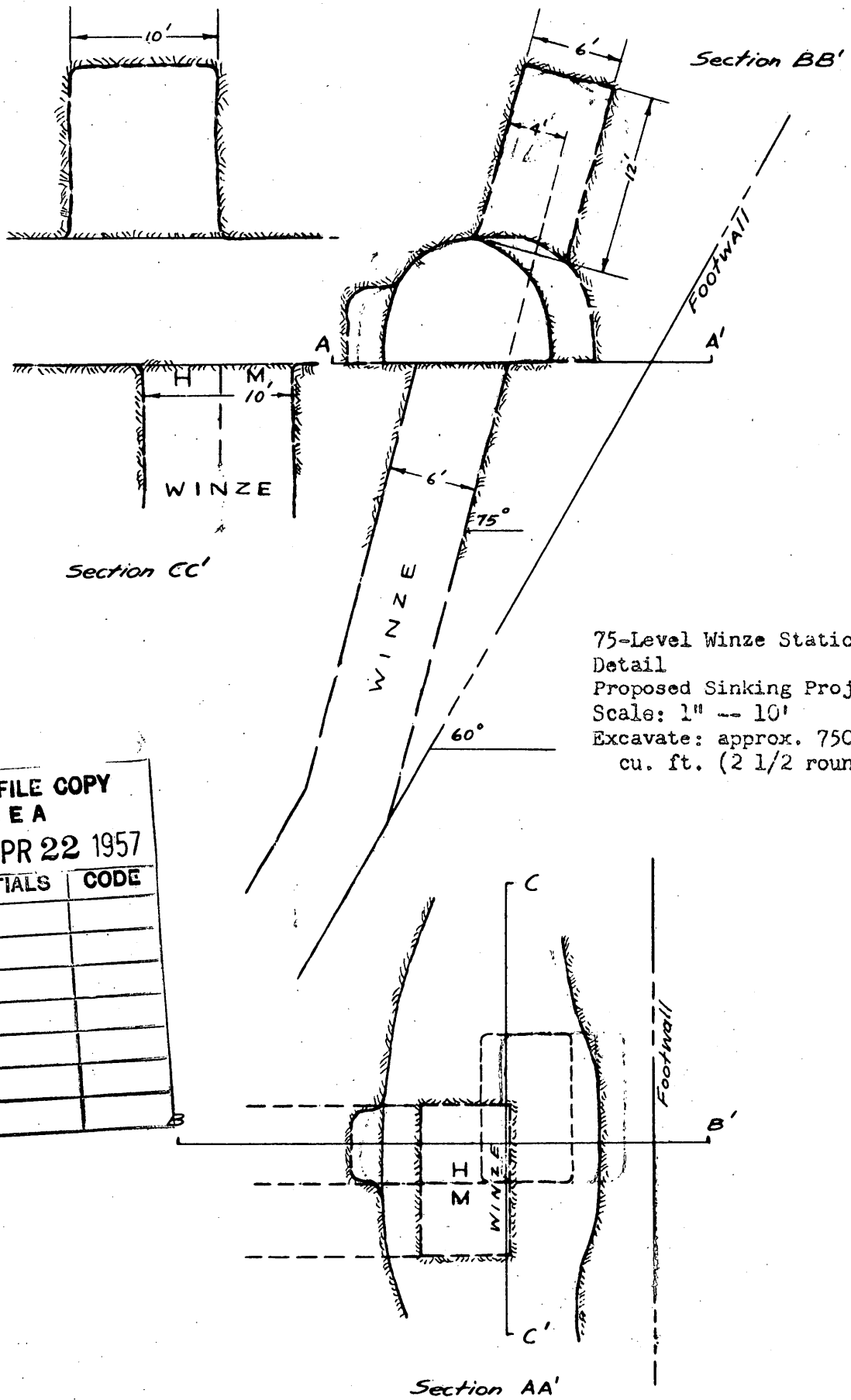

75-Level Winze Station
Detail
Proposed Sinking Project
Scale: 1" -- 10'
Excavate: approx. 750
cu. ft. (2 1/2 rounds)

OFFICIAL FILE COPY
DMEA
RECEIVED APR 22 1957

DATE	INITIALS	CODE

175-Level and 275-Level Winze Station Detail
Proposed Sinking Project
Scale: 1" -- 10'
Excavate: 2,340 cu. ft. (12 rounds)

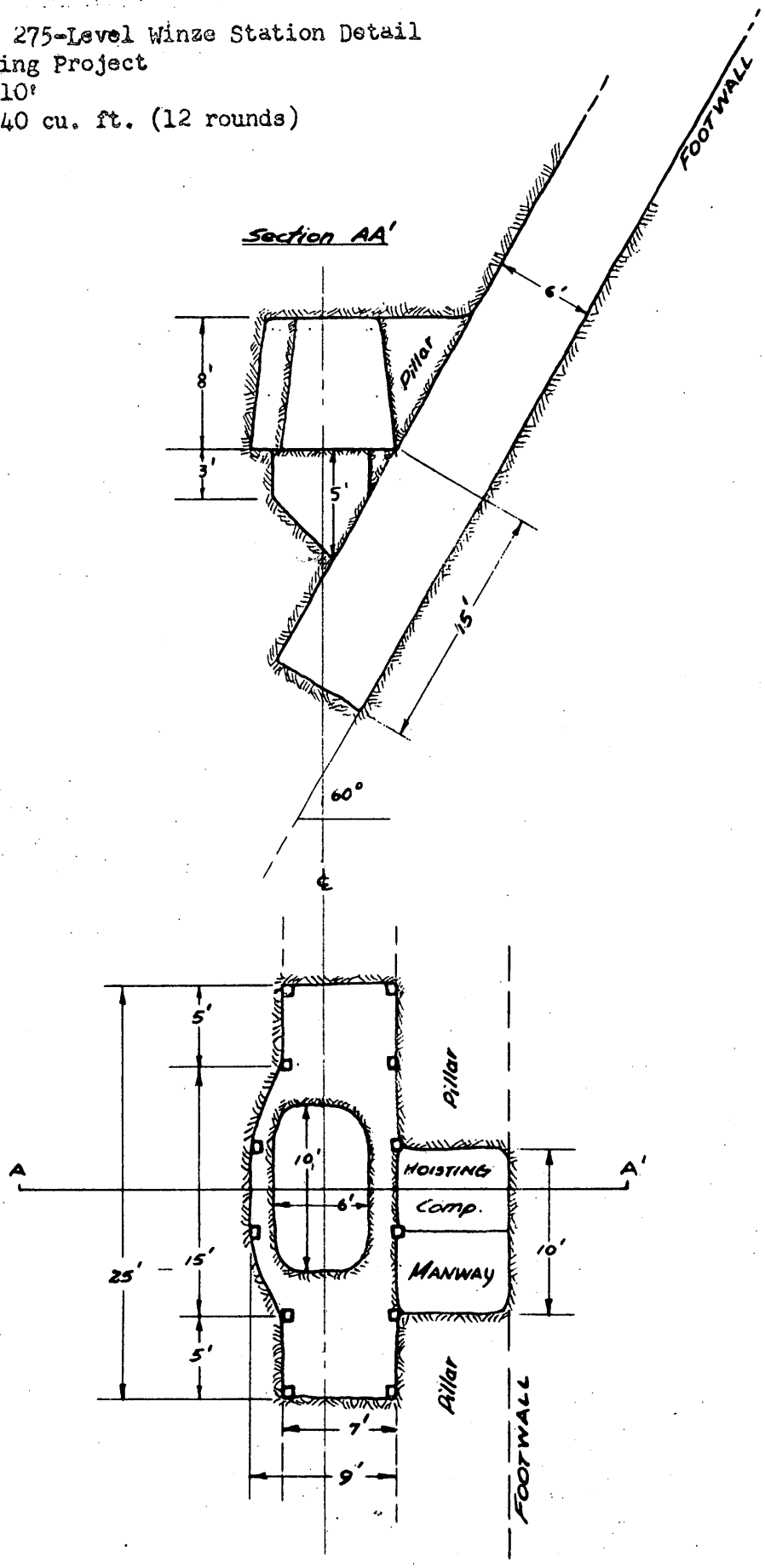

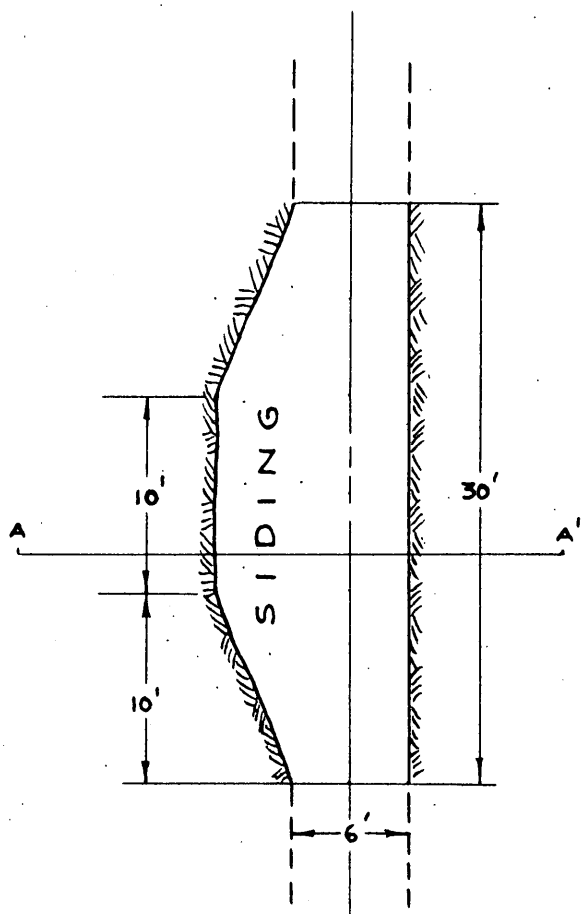

Crosscut Siding Detail
Proposed Crosscut Project
Scale: 1" --- 10'
Excavate 12 rounds, 2400 cu. ft.

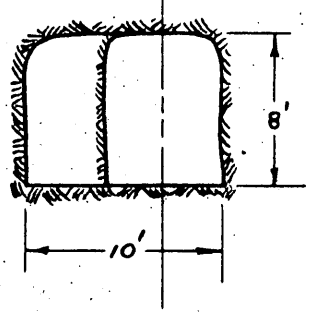

Section AA'

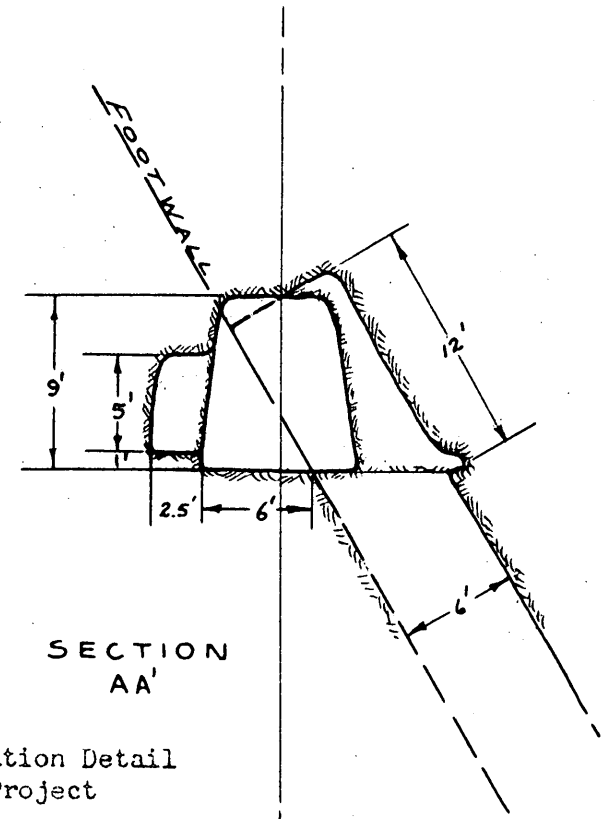

SECTION
AA'

175-level Raise Station Detail
Proposed Crosscut Project
Scale: 1" -- 10'
Excavate 4 rounds, approx.
960 cu. ft.

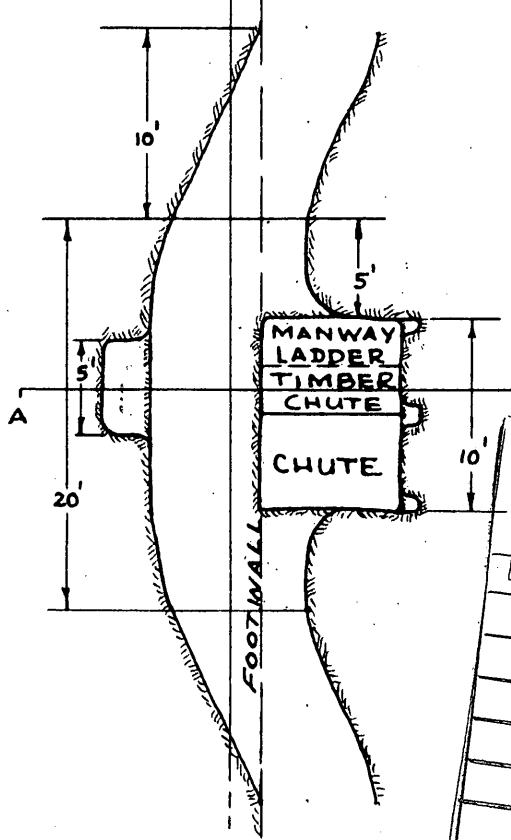

OFFICIAL FILE COPY
D M E A
RECEIVED APR 22 1957
DATE | INITIALS | CODE

So. 157 Howard Street
Spokane 4, Washington
March 5, 1963

OFFICIAL FILE COPY
O. M. E
RECEIVED MAR 7 1963

DATE	INITIALS	CODE
	Howard	500
		520

Messrs. G. C. Holsman and D. A. DuBois
850 Zerelda Street
Butte, Montana

Re: DMRA-4732 (~~Lead-Zinc-Copper~~)
Western America of Montana, Inc.
Morning Mine
Jefferson County, Montana

Gentlemen:

I am happy to advise you that, upon the request of Mr. E. K. Cheadle, our Washington, D. C., office has authorized me to send you the enclosed copy of the report you requested in your letter of December 31, 1962.

Sincerely yours,

D. R. MacLaren
Acting Field Officer, OME
Region I

Enclosure

DRMacLaren:my

cc: E. K. Cheadle
P. O. Box 963
Billings, Montana
OME

Reading copies to:
Holsm
McKelvey

DMEA Form 7
(12-56)

OFFICIAL FILE COPY

Date	Surname	Code
	Griswold	500
3/26	Talbot	800
	Selfridge	930
3/1	on leave	110
3/1	Tomb	100
		220

MAR 1 1963

Memorandum

To: Acting Field Officer, Region I

From: Chief, Division of Field Operations

Subject: DMEA-4732 (Lead-Zinc-Copper)
Western America of Montana, Inc.
Morning Mine
Jefferson County, Montana

Referring to your February 19 memorandum, with attachment, we can see no harm in your giving Holshue and DuBois, as owners, your copy of the report in question, since we also have a copy here.

At the time a contract was prepared, these gentlemen were cooperative in giving a Consent to Lien; hence we feel they are entitled to some consideration.

George C. Selfridge (gla)

WRGriswold/mm
2/28/63
cc: Director's Reading File
Review Committee
Docket

[illegible]

8623

UNITED STATES
DEPARTMENT OF THE INTERIOR
OFFICE OF MINERALS EXPLORATION
So. 157 Howard Street
Spokane 4, Washington
February 19, 1963

OFFICIAL FILE COPY
O. M. E
RECEIVED FEB 21 1963

DATE	INITIALS	CODE
		~~120~~
		~~800~~
		500

Memorandum

To: Chief, Division of Field Operations

From: Acting Field Officer, Region I

Subject: DMEA-4732 (Lead-Zinc-Copper)
Western America of Montana, Inc.
Morning Mine
Jefferson County, Montana

The enclosed copy of a letter dated February 14, 1963, from E. K. Cheadle has resulted from my letter of January 7, 1963, to Holshue and DuBois, a copy of which, with a copy of a letter dated December 31, 1962, from those gentlemen, was sent you.

Please advise me if I should send to Holshue and DuBois the copy of Miller's report which is in our files. If you also have a copy in your files, perhaps one of the copies should be retained either in Washington or in the Field Office for reference in case of a possible application.

D. R. MacLaren

Enclosure

86T

Pratt

963

OFFICIAL FILE COPY
O. M. E
RECEIVED JAN 9 1963

DATE	INITIALS	CODE
1/28		~~260~~
		120
		220

So. 157 Howard Street
Spokane 4, Washington
January 7, 1963

Messrs. G. C. Holshue and D. A. DuBois
850 Zarelda Street
Butte, Montana

Gentlemen:

I regret to advise you that all data contained in an application for DMEA or OME aid is considered as being furnished by an applicant in confidence. Therefore, this office is not authorized to send you copies of the reports which accompanied the application of Western America of Montana, Inc. You might write to Mr. E. K. Cheadle, who was the secretary of Western, and ask if he could furnish you with a copy of their reports. The last address we have is:

Pratt Building
P. O. Box 963
Billings, Montana

The field reports prepared by our geologist and engineers are for Government use only, and I am not authorized to make them available to the public. Should any company with whom you are negotiating care to have a representative call at this office, I would be glad to discuss the geologic setting of your property but will be unable to make any reports available to them or to permit them to copy data from any maps we may have.

Sincerely yours,

D. R. MacLaren
Acting Field Officer, OME
Region I

DRMacLaren:ny

cc: OME
Reading copies to:
Nolan
McKelvey

OFFICIAL FILE COPY
O. M. E
RECEIVED DEC 5 1960

DATE	INITIALS	CODE
12-5	gad	200
12/6	D	120
	WPS	

Box T-86

No. 157 Howard Street
Spokane 4, Washington
November 30, 1960

Mr. Paul A. Wiatrak, President
Wiatrak Mining & Developing
Company, Inc.
5002 Ivanhoe Place, N.E.
Seattle 5, Washington

Re: DMEA-4732 (Lead-Zinc-Copper)
Western America of Montana, Inc.
Morning Mine
Jefferson County, Montana

Dear Mr. Wiatrak:

An application for Defense Minerals Exploration Administration assistance was received on April 18, 1957, and an exploration contract was prepared and submitted to the applicant. However, at that point the applicant decided not to proceed with his program and did not accept the offered contract.

The DMEA program was discontinued June 30, 1958, and its successor agency, the Office of Minerals Exploration, was established on September 11, 1958. It will therefore be impossible to transfer a DMEA contract which was never activated to an OME contract.

However, in case you should wish to submit a new application, we are enclosing one copy each of Title 30--Mineral Resources--and a booklet of Questions and Answers which describe the program. Also enclosed are four copies of the application forms.

If, after study of the Title 30 and the booklet, you wish to submit an application, fill out the front of the form and date and sign the Certification. Then, using as many sheets of paper as necessary, answer all of the questions on the back of the form as fully as possible. If any question does not apply or if you are unable to answer, you should indicate the number and letter of that paragraph and state "does not apply" or "information unavailable" as the case may be. Mail three copies of the application and supporting documents to this office and keep the fourth copy for your files. Advise us if you wish the Lien and Subordination Agreements.

If I may be of further help, please do not hesitate to let me know.

Sincerely yours,

D. R. MacLaren
Acting Field Officer, OMM
Region I

Enclosures

cc: OMM(2) w/cys incoming
Docket No. DMSA-4732
Alphabetical File
Director
Econ. Geol.
BAFM

C O P Y

OFFICIAL FILE COPY
O. M. E.
RECEIVED DEC 5 1960

DATE	INITIALS	CODE

WIATRAK MINING AND DEVELOPING COMPANY, INC.
5002 IVANHOE PLACE, N.E.
Seattle 5, Washington

FILMORE 3238

John Wiatrak, Pres.
Paul A. Wiatrak, Vice Pres.
John E. Erickson, Secy.-Treas.

Chicago Office
Suite 717
30 North La Salle
Chicago 2, Illinois
Andover 3-2905

November 28, 1960

U. S. Dept. of the Interior
Defense Minerals Exploration Administration
So. 157 Howard Street
Spokane 4, Washington

Dear Sirs:

We are negotiating with the owners of the Morning-Midnight property in Basin, Montana. We have been advised that an application for an exploration loan has been submitted and approved.

Naturally, a point of prime importance is whether the funds approved for this property can be transferred from the present owners or lease holders to our organization in the event we can negotiate a deal on the property.

An immediate reply is requested since we must notify the owners of our intentions within a 2 week period.

Very truly yours

/s/ PAUL A. WIATRAK
Paul A. Wiatrak

DMEA Form 7
(12-56)

OFFICIAL FILE COPY

Date	Surname	Code
6/30	Lugescheid	500
6/30	C	221
6/30	C	215
		225

June 30, 1958

Memorandum

To: Director, Operations Control & Statistic Division

From: Director, Division of Base Metals

Subject: Withdrawal of Docket No. DMEA-4732, Western America of Montana, Inc., Morning Mine, Jefferson County, Montana, Lead-Zinc-Copper.

Please be advised that application DMEA-4732, Western America of Montana, Inc., should be withdrawn as the Applicant has refused to sign the proposed Contract No. Idm-E1176 and has returned it to us.

W. R. Griswold

W. R. Griswold

WPKLugescheid/er
Copy to: Admr R File
Chron.

8623

UNITED STATES
DEPARTMENT OF THE INTERIOR
DEFENSE MINERALS EXPLORATION ADMINISTRATION
So. 157 Howard Street
Spokane 4, Washington

OFFICIAL FILE COPY
DMEA
RECEIVED JUN 16 1958

DATE		
6/16	C	220
~~6/17~~	~~Ray~~	~~500~~
		220

June 11, 1958

Mr. George C. Selfridge, Chairman
Operating Committee, DMEA
Department of the Interior
Washington 25, D. C.

Re: Docket No. DMEA-4732 (Lead-Zinc-Copper)
Western America of Montana, Inc.
Morning Mine
Jefferson County, Montana

Dear Mr. Selfridge:

As promised in our letter of May 29, 1958, enclosed are the original and four copies of proposed contract Idm-E1176. We have kept the two "extra" copies of Annex I and Exhibit "A". I hope this meets with your approval. Heretofore we have made thermofax copies of this material to put in our docket, for information purposes only, because on occasion we have had to refer to unsigned or rescinded contracts. If you prefer that we return these copies to you, please inform us and we will send them along.

Also enclosed are two copies of a letter dated June 2, 1958 (received June 9) from Mr. E. K. Cheadle, and two copies of our reply dated June 11, 1958, which are self-explanatory.

Sincerely yours,

A. E. Weissenborn

A. E. Weissenborn
Executive Officer, DMEA
Field Team, Region I

Enclosures

cc: USBM (2)
USBM (AD)
Prinz

EXTRA COPY
DMEA
RECEIVED JUN 16 1958
DATE | INITIALS | CODE

So. 157 Howard Street
Spokane 4, Washington

June 11, 1958

Mr. George C. Selfridge, Chairman
Operating Committee, DMEA
Department of the Interior
Washington 25, D. C.

Re: Docket No. DMEA-4732 (Lead-Zinc-Copper)
Western America of Montana, Inc.
Morning Mine
Jefferson County, Montana

Dear Mr. Selfridge:

As promised in our letter of May 29, 1958, enclosed are the original and four copies of proposed contract Idm-E1176. We have kept the two "extra" copies of Annex I and Exhibit "A". I hope this meets with your approval. Heretofore we have made thermofax copies of this material to put in our docket, for information purposes only, because on occasion we have had to refer to unsigned or rescinded contracts. If you prefer that we return these copies to you, please inform us and we will send them along.

Also enclosed are two copies of a letter dated June 2, 1958 (received June 9) from Mr. E. K. Cheadle, and two copies of our reply dated June 11, 1958, which are self-explanatory.

Sincerely yours,

A. E. Weissenborn
Executive Officer, DMEA
Field Team, Region I

Enclosures

cc: USBM (2)
USBM (AD)
Prinz

DMEA

So. 157 Howard Street
Spokane 4, Washington

June 11, 1958

Mr. E. K. Cheadle
Fratt Building
P. O. Box 963
Billings, Montana

Re: Docket No. DMEA-4732 (Lead-Zinc-Copper)
Western America of Montana, Inc.
Morning Mine
Jefferson County, Montana

Dear Mr. Cheadle:

Thank you for your letter of June 2, 1958, and the fifth copy of the proposed DMEA Contract Idm-E1176, Docket No. DMEA-4732.

Had Western America of Montana accepted the contract prior to giving up the lease on the property, it would have been possible for that company to have assigned the contract and the lease to another party. However, as the company no longer holds the claims and has not accepted the contract, Western America of Montana has no contract to assign.

Should Mr. Holshue or another lessee wish to apply for DMEA aid, we would be happy to consider the application and he might be offered essentially the same contract as, of course, our evaluation of the property has already been made. However, there is no assurance that this agency will be able to enter into new contracts after June 30 as the present authorization is due to expire on that date unless extended by law. Legislation to this end has been introduced in Congress, but if it is not passed by July 1, there might be some delay before another contract can be negotiated. If the new lessee is interested in a DMEA contract, he should contact us immediately.

Sincerely yours,

A. E. Weissenborn
Executive Officer, DMEA
Field Team, Region I

cc: DMEA (2)
USBM (2)
USBM (AD)
Prinz

EXTRA COPY
DMEA
RECEIVED
DATE
CODE

So. 157 Howard Street
Spokane 4, Washington

June 11, 1958

Mr. E. K. Cheadle
Fratt Building
P. O. Box 963
Billings, Montana

Re: Docket No. DMEA-4732 (Lead-Zinc-Copper)
Western America of Montana, Inc.
Morning Mine
Jefferson County, Montana

Dear Mr. Cheadle:

Thank you for your letter of June 2, 1958, and the fifth copy of the proposed DMEA Contract Idm-E1176, Docket No. DMEA-4732.

Had Western America of Montana accepted the contract prior to giving up the lease on the property, it would have been possible for that company to have assigned the contract and the lease to another party. However, as the company no longer holds the claims and has not accepted the contract, Western America of Montana has no contract to assign.

Should Mr. Holshue or another lessee wish to apply for DMEA aid, we would be happy to consider the application and he might be offered essentially the same contract as, of course, our evaluation of the property has already been made. However, there is no assurance that this agency will be able to enter into new contracts after June 30 as the present authorization is due to expire on that date unless extended by law. Legislation to this end has been introduced in Congress, but if it is not passed by July 1, there might be some delay before another contract can be negotiated. If the new lessee is interested in a DMEA contract, he should contact us immediately.

Sincerely yours,

A. E. Weissenborn
Executive Officer, DMEA
Field Team, Region I

cc: DMEA (2)
USBM (2)
USBM (AD)
Prinz

OFFICIAL FILE COPY
DMEA
RECEIVED JUN 16 1958
DATE ... DE

LAW OFFICE OF
E. K. CHEADLE
FRATT BUILDING
P. O. BOX 993
BILLINGS, MONTANA
TELEPHONE 9-8450

June 2, 1958

Department of the Interior
Defense Minerals Exploration Administration
South 157 Howard Street;
Spokane, Washington

ATTENTION: MR. WEISSENBORN

Dear Mr. Weissenborn:

As requested in your letter of May 29, I am enclosing herewith fifth copy of proposed D.M.E.A. contract, Docket No. 4732.

I am advised by Mr. Oil Holshue, one of the owners of the [illegible] claims, that he expects to close a deal with a new lessee. It occurred to me that since all of the work in connection with this contract has been prepared, your agency might be interested in either making a new contract or accepting an assignment from Western America of Montana of the present contract. No doubt Mr. Holshue will be contacting you in this regard.

Thank you for returning copy a letter directed to Nevada Agency and Trust Company, which was included by mistake in my letter dated May 19.

I also wish to again thank you for your consideration in connection with this entire matter, and to assure you that I regret very much that Western America was not able to go through with the contract.

Very truly yours,

E. K. Cheadle

EKC:jb

RECEIVED
JUN 9 1958
U.S.G.S.
SPOKANE, WASH.

DMEA (2)

EXTRA COPY
DELTA
RECEIVED 1958
DATE | CODE

LAW OFFICE OF
K. CHEADLE
FRATT BUILDING
P. O. BOX 963
BILLINGS, MONTANA
TELEPHONE 9-8450

Mee

Government's copy

MF-200
(Revised June 1954)

Docket No. DMEA - 4732

Commodity Lead-Zinc-Copper

Contract No. Idm-E 1176

UNITED STATES OF AMERICA
DEPARTMENT OF THE INTERIOR
DEFENSE MINERALS EXPLORATION ADMINISTRATION

EXPLORATION PROJECT CONTRACT[1]

It is agreed this 14 MAR 1958 day of ....., 195...., between the United States of America, acting through the Department of the Interior, Defense Minerals Exploration Administration, hereinafter called the "Government," and [2] WESTERN AMERICA OF MONTANA, INC., a Montana corporation,

whose mailing address is P. O. Box 782
Helena, Montana,
hereinafter called the "Operator," as follows:

ARTICLE 1. *This contract* is entered into under the authority of the Defense Production Act of 1950, as amended. It consists of this form (MF-200), the attached Exhibit "A," Annex I, and map, Plate II.

The Operator shall not transfer or assign this contract or any right thereunder without the written consent of the Government.

ARTICLE 2. *Operator's property rights.*—(a) The land which is the subject of this contract (hereinafter called "the land") is in the State of Montana, County of Jefferson, and is described in Annex I.[3]

(b) The Operator represents and undertakes that:

(1) The Operator is the [4] Lessee of [5] See Annex I in the land, in possession and entitled to possession for all of the purposes of this contract, under and by virtue of a [6] See Annex I, [7] recorded in Book See Annex I, page ....., official records of said County; and

(2) The Operator's right, title, or interest (whether as owner, lessee, or otherwise) is subject only to the following claims, liens, or encumbrances: Royalty interests of lessors.

(c) The Subordination Agreement of the holder of any claim, lien, or encumbrance listed above, and (if the Operator does not hold the legal title) the Consent to Lien of any holder of the legal title

[1] If sufficient space is not provided in any blank, use an extra sheet of paper and refer to it in the blank.
[2] Insert name, and if an organization, its nature (corporation and place of incorporation, partnership with names of partners, etc.).
[3] State on a separate sheet marked "Annex I" the legal description or enough to identify the property, particularly excluding any areas from which the production is not to be subject to the Government's percentage royalty.
[4] Insert "owner," "lessee," "contract purchaser," "locator," etc.
[5] Insert "the entire interest," "the mineral rights," "an undivided one-third," etc.
[6] Insert "deed," "lease," "contract," "location notice," "patent," etc.
[7] If not recorded, so indicate by inserting "un."

of the land (lessor, seller, optionor, etc.), are attached, as follows: Consents to Lien and Subordination Agreements of the lessors, Gil C. and Anne Holshue and D. A. and Catherine DuBois.

(d) The Operator shall preserve and maintain his right, title, and interest in the land and his right to the possession thereof for the purposes of this contract, and shall devote the land and all existing improvements, facilities, buildings, installations, and appurtenances to the purposes of this contract. Until the lapse of the time within which the Government may make a certification of discovery or development without any such certification having been made, and after any such certification has been made, the Operator shall neither transfer, convey, nor surrender the land nor any right, title, or interest therein, nor permit nor suffer any claim, lien, or encumbrance thereon, without expressly referring to and providing in the instrument of conveyance, lien, or encumbrance for the preservation of the Government's right to a percentage royalty on production and lien for the payment thereof. If the Government makes no certification of discovery or development within the time limited in Article 8, it shall thereafter have no claim against the land or any production therefrom except for any production referred to in Article 8(b)(1).

ARTICLE 3. *The exploration project.*—The project is a search for indicated or undeveloped deposits of Lead, zinc, and copper. The work to be performed is described in Exhibit "A." The Operator on or before April 1, 1958, shall commence the work, and on or before April 1, 1959 (unless the Operator's obligation to prosecute the work is terminated—see Article 10) shall either have completed the work or shall have incurred allowable costs (see Article 6) in a sum not less than the estimated total allowable cost set forth in Exhibit "A," except as otherwise provided in Exhibit "A" with respect to stages of work.

ARTICLE 4. *Performance of the work.*—(a) *Operator's responsibility.*—The work shall be performed with reasonable diligence, efficiently, expertly, in a workmanlike manner, in accordance with good mining standards and State regulations for health and safety and for liability insurance covering employment; and with suitable and adequate equipment, facilities, materials, supplies, and labor, to bring it to completion within the time fixed.

(b) *Independent contracts.*—To the extent that the allowable costs are estimated in Exhibit "A" with express reference to performance by independent contractors on a unit-price basis (such as per foot of drilling, per foot of drifting, per hour of bulldozer operations), the work may be so performed; but if the reference in Exhibit "A" to any such independent contract requires the Government's approval thereof, payments under such contract will not be allowable costs unless the Government gives its written approval of the contract. Any such independent contract shall refer to some specific and identifiable part of the work, and shall be subject to all of the pertinent terms and conditions of this exploration contract; but the Government shall not be considered a party thereto, and its rights under this contract, including the right to terminate its contributions, shall not be affected thereby. Regardless of the provisions of any such independent contract and regardless of the Government's approval thereof, the Government will participate in payments to the independent contractor only on account of work performed in accordance with the provisions of this exploration project contract, and only to the extent that the Government deems the unit prices for the work under the independent contract to be reasonable.

(c) *Government may inspect.*—The Operator shall consult with and inform the Government on all phases of the work as it progresses. The Government may enter at all reasonable times to inspect the work under the contract, and also after a certification of discovery or development to inspect production operations and underground workings. The operator shall provide the Government with all reasonable means of access for such inspections.

ARTICLE 5. *Contribution by the Government.*—The estimated total allowable cost of the project, set forth in Exhibit "A," is the sum of $63,910.00 The Government shall contribute 50 percent of the allowable costs as they are incurred in a total sum not in excess of $31,955.00: *Provided, That until the Operator has* rendered to the Government his final report, and any final auditing required by the *Government has been* made, and a final settlement of the contract has been made, the Government may withhold *from the last*

voucher or vouchers such sums as it sees fit not in excess of 10 percent of the estimated total cost of the work or not in excess of the amount of the Government's contribution to the cost of property which is or may become subject to disposal as provided in Article 9(c), whichever is greater. The Government will make its contribution on the basis of the monthly vouchers referred to in Article 7(b), but all payments by the Government are provisional only, subject to audit, until the account between the Operator and the Government is finally audited and settled. "Costs incurred" mean costs that have been paid or have become due and payable, or that in the opinion of the Government have become an obligation. The Government may make payments directly to independent contractors and suppliers for the account of the Operator rather than to the Operator.

ARTICLE 6. *Estimated costs.*—(a) *Categories of costs.*—The allowable costs of the work to which the Government shall contribute are limited to those that are direct, reasonable, necessary, and that are estimated in Exhibit "A" by categories as specified in this article. If any category or subcategory is omitted from the estimate of costs, or if the word "none" is annexed to the listing thereof, costs under such category or subcategory are not allowable. Any excess over any estimate which is indicated as the maximum of any category, subcategory, or item, either as to requirement or related cost, and any excess over the estimated total allowable cost of the work, shall not be allowable. Any excess over the estimate of any category, subcategory, or item, either as to requirement or related cost, not indicated as a maximum shall be allowable within the limit of the estimated total allowable cost of the work. To the extent that excesses over maximums other than the estimated total allowable cost of the work may be necessary for the performance of the work, the Operator shall incur such excesses for his own account without contribution by the Government; ~~but except for any such necessary excesses in categories, subcategories, or items thereunder the Operator is not obligated to incur more than his agreed percentage of the estimated total allowable cost of the work~~. See Article 13.

To the extent specified in this article or in Exhibit "A" the following categories, subcategories, and elements thereof are maximums; but if not so specified either here or in Exhibit "A" they are not maximums, and may be exceeded within the limit of the estimated total allowable cost of the work:

CATEGORY (1)—INDEPENDENT CONTRACTS.—Work to be performed under independent contracts (see Article 4(b)). The estimated total amount of this category and the estimated cost of each unit of work for performance under an independent contract are maximums.

CATEGORY (2)—PERSONAL SERVICES.

Subcategory (a)—Supervision.—All elements of this subcategory (number of supervisors, periods of employment, rates of pay, and total) are maximums.

Subcategory (b)—Technical services.—All elements of this subcategory (number of technicians, periods of employment, rates of pay, and total) are maximums.

Subcategory (c)—Labor.

CATEGORY (3)—OPERATING MATERIALS AND SUPPLIES.—Includes such items as drill bits and steel, explosives, fuel, pipe, power, small tools costing less than $50 each, timber, track.

CATEGORY (4)—OPERATING EQUIPMENT.

Subcategory (a)—Rental.—The number of each object to be rented [6 mine cars, 1 truck], the rate of rental [$100 per month, $5 per hour], and the total of this subcategory are maximums.

Subcategory (b)—Purchases.—The estimated total of this subcategory is a maximum.

Subcategory (c)—Depreciation.—All elements of this subcategory (time periods, rate of depreciation, and subcategory total) are maximums.

CATEGORY (5)—INITIAL REHABILITATION AND REPAIRS.—Estimates under this category include all requirements and related costs, such as labor, materials and supplies, and supervision at a rate not higher than provided for in Category (2), and shall not be duplicated under any other category. The estimated total of this category is a maximum.

Subcategory (a)—Initial rehabilitation and repairs of existing buildings, fixtures, and installations (exclusive of mine workings).—The estimated total of this subcategory is a maximum.

Subcategory (b)—Initial rehabilitation and repairs of operating equipment.—The estimated total of this subcategory is a maximum.

CATEGORY (6)—NEW BUILDINGS, FIXTURES, AND INSTALLATIONS (EXCLUSIVE OF MINE WORKINGS).—Estimates under this category include all requirements and related costs, such as labor, materials and supplies, and supervision at a rate not higher than provided for in Category (2), and shall not be duplicated under any other category. The estimated total of this category is a maximum.

CATEGORY (7)—MISCELLANEOUS.—Repairs and maintenance (other than initial) of operating equipment, analytical work, prints and other reproductions, accounting, Operator's share of payroll taxes, liability insurance covering employment, travel, communications, and any other items of requirement or cost that do not fall within any of the first 6 categories.

THE ESTIMATED TOTAL ALLOWABLE COST of the work is a maximum.

(b) *Nonallowable costs.*—The following costs are not allowable for contribution by the Government:

(1) *Costs of the land,* such as rental, depreciation, depletion, or other cost of acquiring, owning, or holding possession;

(2) *Indirect costs,* such as general overhead, corporate management, interest, taxes (other than payroll and sales taxes), insurance (other than liability insurance covering employment), damages to persons, damages to property (other than necessary repairs or replacements of equipment or other property used in the work);

(3) *Previous work* performed or costs incurred before the date of this contract; and

(4) *Deferred payments.*—Any costs incurred by the Operator under any rental-purchase agreement, installment-purchase agreement, or any agreement for the purchase of goods under the provisions of which payment of the full purchase price is deferred more than 90 days from the delivery of the goods; unless the purchase agreement is approved by the Government in writing.

(c) *Reductions in costs.*—The Operator shall account for and give the Government credit for any incidental benefits, credits, or money received in the ordinary course of business in prosecuting the work (as by salvage or sale of materials or equipment, furnishing of room or board, furnishing of power or services to third persons, rebates or discounts on purchases, etc.), in the same ratio in which the Government contributes to costs; and such amounts shall be treated as a reduction in costs incurred so that they are available for use within the limit of the original estimated total cost. This provision does not apply to receipts from production which are subject to the Government's percentage royalty under the provisions of Article 8. **See Article 13.**

ARTICLE 7. *Reports, accounts, audits.*—(a) *Operator's records.*—The Operator shall keep suitable records and accounts of the work performed and of any production in which the Government may have an interest; and shall preserve those with respect to work performed for at least three years after final payment by the Government, and those with respect to production for at least three years after any obligation to pay royalties to the Government has terminated. The Government may inspect and audit said records and accounts at any time, either by itself or by a certified public accountant. If the Government elects to audit said records and accounts relating to the exploration work by certified public accountant, it may do so as a cost of the work to which the Operator shall contribute. The Comptroller General of the United States or his representative, until the expiration of said three-year periods, shall have access to and the right to examine any pertinent books, documents, papers, and records of the Operator. All of the Operator's vouchers and records and accounts relating thereto and the Government's payments thereof remain subject to adjustment until final audit by the Government. If work under this contract is carried on in conjunction with any other operations, or if labor, supervision, services, materials, supplies, equipment, facilities, or other requirements for carrying on the work are also used in connection with other operations, the costs shall be segregated and accounted for on a basis and by methods and accounts that are satisfactory to and approved by the Government.

(b) *Progress reports and vouchers.*—The Operator shall provide the Government with five copies of monthly progress reports in three sections as follows: (1) Operator's Monthly Report and Voucher showing detailed costs incurred during the reporting period; (2) Operator's Unit Cost and Progress Report showing the various types of work performed during the reporting period and costs incurred for each type of work; and (3) a Narrative Report of the work performed during the reporting period including adequate engineering-geological maps or sketches, drill hole logs and locations, and assay reports on samples taken concurrently with advance in mineralized ground. (Forms for reporting under (1) and (2) above will be provided by the Government.)

(c) *Final report.*—Upon completion of the work or termination of the Government's obligation to contribute to costs, the Operator shall furnish the Government with five copies of a final report (in addition to the final progress report and voucher). This final report shall include a geological and engineering evaluation of the results of the work performed under the contract with an estimate of the ore reserves resulting from such work, complete assay data, adequate geological and engineering maps or sketches, and a summary of the work performed and related costs incurred.

(d) *Report of sales.*—The Operator shall provide the Government with suitable accounting and documentary evidence covering all production to which the Government's percentage royalty relates, such as copies of smelter or concentrator settlement sheets, and certified accounts of production and sale or other disposition of production.

(e) *Compliance with requirements.*—If in the opinion of the Government any of the Operator's reports, records, or accounts are insufficient or incomplete, or if the Operator fails to make them, the Government may procure the making or completion of such with suitable attachments as an expense of the work to which the Operator shall contribute. The Government may withhold approval and payment of any vouchers relating to insufficient or incomplete reports, records, or accounts.

ARTICLE 8. *Repayment by Operator.*—(a) *Certification.*—If the Government considers that a discovery or development from which production may be made has resulted from the work, the Government, at any time not later than six months after a sufficient final report and final account (see Article 7) has been rendered, may so certify in writing to the Operator. Such certification shall describe broadly or indicate the nature of the discovery or development.

(b) *Royalty on production.*—The Operator, as principal if the Operator is the producer, or as surety if the Operator is not the producer, shall pay to the Government a royalty on all minerals mined or produced from the land, as follows: (1) regardless of any certification of discovery or development, from the date of the contract until the lapse of the time within which the Government may make such certification, or until the total net amount contributed by the Government without interest is fully repaid, whichever occurs first; or (2) if the Government makes a certification of discovery or development, within a period of ten years from the date of the contract, or until the total net amount contributed by the Government without interest is fully repaid, whichever occurs first.

(c) *Basis for computation.*—The Government's royalty shall be a percentage of the gross proceeds (including any bonuses, premiums, allowances, or other benefits) from the production sold, in the form sold (ore, concentrates, metal, or equivalent), at the point of delivery (the f. o. b. point); *except,* that charges of *the buyer* arising in the regular course of business, and shown as deductions on the buyer's settlement sheets, on account of the cost of treatment processes performed by *the buyer,* sampling and assaying to determine the value of the production sold, and freight paid by *the buyer* to a carrier (not the Operator), shall be allowed as deductions in arriving at the "gross proceeds" as that term is used herein. Any costs of treatment processes, sampling or assaying, or transportation, performed or paid by the Operator or by anyone other than the buyer, are not deductible in arriving at the "gross proceeds" as that term is here used. The term "treatment processes," as here used, means those processes (such as milling, concentrating, smelting, refining, or equivalent) applied to the crude ore or other production after it is extracted from the ground, to put it into a commercially marketable form; excluding fabricating or manufacturing.

(d) *Unsold production.*—If any production (ore, concentrates, metal, or equivalent), after the lapse of six months from the date the ore was extracted from the ground, remains neither sold nor used by the Operator in integrated manufacturing or fabricating operations (for instance, if it is stockpiled), the Government, at its option, as long as it so remains, may require the computation and payment of its royalty on the value of such production in the form (ore, concentrates, metal, or equivalent) it is in when the Government elects to require computation and payment. If any production is used by the Operator in integrated manufacturing or fabricating operations before the Government makes its election, the Government's royalty on such production shall be computed on the value therof in the form in which and at the time when it is so used. "Value" as here used means what is or would be gross income from mining operations for percentage depletion purposes in Federal income tax determination, or the market value, whichever is greater.

(e) *Percentages of royalty.*—The percentages of the Government's royalty shall be as follows:

One and one-half (1½) percent of amounts ("gross proceeds" or "value") not in excess of eight dollars ($8.00) per ton of production in the form in which sold, held, or used, plus one-half (½)

percent for each additional full fifty cents ($0.50) by which such amounts exceed eight dollars ($8.00) per ton, but not in excess of five (5) percent of such amounts.

(For instance: the royalty on an amount of five dollars ($5.00) per ton would be one and one-half (1½) percent; on an amount of ten dollars ($10.00) per ton, three and one-half (3½) percent.)

(f) *Time for computation and payment.*—The Government's royalty shall be computed and paid currently upon each lot sold, held, or used in integrated operations, as the case may be, as above provided in this article.

(g) *Lien for payment.*—To secure the payment of its percentage royalty, there is hereby granted to the Government a lien upon the land or the Operator's interest in the land and upon any production of minerals therefrom, until the royalty claim is extinguished by lapse of time or is fully paid.

(h) *Notice to purchasers.*—The Operator shall give notice of the Government's claim for royalty to any purchaser of the production, and shall authorize and direct such purchaser to pay the royalty directly to the Government and to furnish the Government with copies of the settlement sheets. If the records of any production and sales or other disposition of production, whether the production is by the Operator or by others, are not made available to the Government, the amount of the royalty may be estimated by the Administrator, Defense Minerals Exploration Administration, or his successor, and his estimate thereof shall be final and binding upon the Operator.

(i) *No obligation to produce.*—Nothing in this contract is to be construed as imposing any obligation on the Operator or the Operator's successor in interest to engage in any production operations.

(j) *Government not obligated to buy.*—Nothing in this contract shall be construed as imposing any obligation on the Government to purchase any minerals mined or produced from the land.

ARTICLE 9. *Interests in purchased property.*—(a) *Title and ownership.*—All costs under this contract shall be incurred by the Operator in the Operator's own name and for the Operator's own account; but any property acquired to the cost of which the Government contributes shall belong to the Operator and the Government jointly in proportion to their respective contributions, although title thereto shall be taken in the name of the Operator.

(b) *Preservation of property.*—Until the final disposal of any property in which the Government has an interest the Operator shall preserve and protect same for the best interest of the Government, any reasonable and necessary costs thereof to be treated as an allowable cost of the project. After the completion of the work or termination of the Government's obligation to contribute, or when such property is not in use for or needed for the work, the Operator shall neither use it without the written consent of the Government nor without paying a reasonable rental to be fixed by the Government for its interest.

(c) *Disposal of property.*—Upon the completion of the work or termination of the Government's obligation to contribute to costs, or when the property is no longer needed for the work, the Operator shall promptly dispose of salable or salvageable property in which the Government has an interest for the joint account of the Government and the Operator, either by return to the vendor, by sale to others, or purchase by the Operator or the Government at a price at least as high as could be obtained from others, unless the Government in writing waives its interest in any such property. Without advance approval of the sales price by the Government the Operator shall not sell at any price any item of property the cost of which was more than $500, and shall not sell at less than 25 percent of the purchase price any item of property which cost $500 or less. The Government, in lieu of approving the sales price for any such item, may itself purchase the item at the best price which the Operator is able to obtain or himself cares to give. Property remaining upon any termination of the work shall be considered in groups or categories (such as drill steel, or explosives, or pipe, or rails), and if the original cost of the remaining unexpended portion of any such group or category is less than $50, the Government waives its interest therein. If necessary to accomplish the disposal of any item the Operator shall dismantle and sever it from the land, the cost thereof to be treated as a cost of the project.

(d) *Default of the Operator re disposal.*—If within 90 days after the completion of the work or termination of the Government's obligation to contribute to costs, or after the property is no longer needed for the work, or after such further time as the Government may in writing allow, the Operator has failed to sell or otherwise liquidate or dispose of any property in which the Government has an interest, the Government, at any time prior to final settlement under the contract, may pursue one of the following two courses: (1) the Government, by written notice to the Operator, may place upon such property what in its opinion is a fair valuation thereof, not in excess of the cost less 1.66 percent per month from the

date such property was purchased under this contract to the termination of said 90-day period; and such property shall thereupon be considered and accounted for as having been purchased by the Operator at the valuation so fixed by the Government; or (2) the Government may enter and take possession of such property wherever it may be found, and remove and dispose of it for the joint account of the parties.

ARTICLE 10. *Termination of the Government's obligations.*—(a) If in the opinion of the Government operations at any time have failed to achieve anticipated results that indicate the probability of making a worthwhile discovery, and in the opinion of the Government further operations are not justified, the Government may give the Operator written notice thereof, and thereupon: (1) the Government shall be free of all obligation to contribute to costs not then incurred other than such as may be allowable under the provisions of the contract as necessary and incidental to winding up, reporting, and accounting; and (2) the Operator shall be free of all obligation to prosecute the work other than such as may be necessary and incidental to winding up, reporting, and accounting.

(b) If in the opinion of the Government the Operator is in any manner in default under the terms of the contract, the Government may give the Operator written notice of such default with a specification of reasonable time within which the default must be cured; and if the Operator fails to cure such default as required, thereupon: (1) the Government shall be relieved of all obligation to contribute to costs not incurred when the notice was given, other than such as may be allowable by the provisions of the contract as necessary and incidental to winding up, reporting, and accounting; and (2) the Operator shall be free of all obligation to prosecute the work other than such as may be necessary and incidental to winding up, reporting, and accounting. The remedy provided for the Government in this paragraph "(b)" is in addition to any other remedy provided in this contract, and in addition to any other remedy the law may provide for breach of contract.

(c) The giving of any notice by the Government under the provisions of this Article 10 shall not affect the Government's rights as provided for in the contract with respect to a percentage royalty, and such rights shall be fully preserved.

ARTICLE 11. *Notices to be given by the Government* may be delivered to the Operator, or may be sent by registered mail addressed to the Operator at his mailing address stated in this contract. If mailed, notices are deemed to have been delivered five days after the date of mailing.

ARTICLE 12. *Officials not to benefit.*—No member of or delegate to Congress or resident commissioner shall be admitted to any share or part of this contract or to any benefit that may arise therefrom; but this provision shall not be construed to extend to this contract if made with a corporation for its general benefit.

ARTICLE 13. *Changes and added provisions.*—

(a) That part of the last sentence in the first paragraph of Article 6(a) commencing after the semicolon is deleted.

(b) In the last sentence of Article 6(c), the words "Article 8" are substituted for the words "Article 9."

Executed in sextuplicate the day and year first above written.

THE UNITED STATES OF AMERICA

By O. Mitterdorf
Administrator, Defense Minerals
Exploration Administration

WESTERN AMERICA OF MONTANA, INC.
(Operator)

By E. Kheadle

Title

I, ..., certify that I am the ..... secretary of the corporation named as Operator herein; that ..... who signed this contract on behalf of the Operator, was then ..... of said corporation; that said contract was duly signed for and in behalf of said corporation by authority of its governing body, and is within the scope of its corporate powers.

E. Kheadle

[CORPORATE SEAL]

Long
Kenyon

U. S. GOVERNMENT PRINTING OFFICE 16—70617-1

Appd. Sol. Off.
Hugeschied
Chambers
Johnson

EXPLORATION PROJECT CONTRACT
WESTERN AMERICA OF MONTANA, INC.
DOCKET NO. DMEA-4732

ANNEX I

The land referred to in Article 2 of the Contract is situated in sections 7, 17, and 18, T. 7 N., R. 5 W., M.P.M., in Jefferson County, Montana, and is shown on the map entitled "Midnight-Morning Property, Western America of Montana, Inc. - Plate II," attached to and made a part hereof.

The Operator has possession by virtue of (1) a Mining Lease dated December 31, 1957, from Gil C. and Anne Holshue and D. A. DuBois and Catherine DuBois; and (2) an Assignment of Mining Lease dated June 16, 1957, from the Western America Uranium Exploration Corporation, copies of which are in DMEA Docket No. 4732. The property consists of 2 patented and 8 unpatented lode mining claims as follows:

Patented Mining Claims

Name of Claim	Mineral Survey No.
Morning	8518
Midnight	8519

Unpatented Mining Claims	Book	Page
Cindy No. 1	48	590
Cindy No. 2	48	591
Cindy No. 3	48	592
Cindy No. 4	48	593
Cindy No. 5	48	594
Cindy No. 6	48	595
Midnight Extension	48	596
Morning Extension	48	597

The Notices of Location of the said claims are recorded in the Jefferson County Clerk's office in Boulder, Montana, as above

identified, and the descriptions therein are incorporated herein by reference.

Copies of Consents to Lien and Subordination Agreements executed by Gil C. and Anne Holshue and D. A. and Catherine DuBois are attached and made a part hereof.

MF-205
(Combines and supersedes MF-201 and MF-203)
June 1956

RECEIVED
JUN 20
D.M.E.A.

For Government's Use Only
EXPLORATION PROJECT CONTRACT
Operator
Docket No. DMEA-
Contract No. Idm-E 1176
Contract Date 4 MAR 1958

CONSENT TO LIEN
and
SUBORDINATION AGREEMENT 1/

To the United States of America:

Referring to that certain land in the County of Jefferson, State of Montana, described as follows: 2/

Cindy Lode Mining Claims, Nos. 1 to 6, inclusive

Midnight Extension Lode Mining Claim

Morning Extension Lode Mining Claim

which is the subject of a proposed exploration project contract, hereinafter called the "contract," with the United States of America, hereinafter called the "Government;" in consideration of the contract and as an inducement to the Government to enter into it, the undersigned hereby--

1. Undertakes and agrees that property in which the Government may acquire an interest or equity under the contract may be dismantled, severed from the land, and removed, as may be provided in the contract; and the Government's interest and equity in such property shall be prior and superior to any adverse right or claim of the undersigned;

2. Grants to the Government a lien upon all of the undersigned's right, title, and interest in the land and upon any production of minerals therefrom, to secure the payment to the Government of a percentage royalty on production as may be provided for by the Contract;

3. Subordinates the undersigned's right, title, claim, or interest in or against the land and in any production therefrom to the rights of the Government under the contract with respect to royalty on production and liens to secure same;

4. Represents and undertakes that there is no claim, lien, or encumbrance upon the undersigned's right, title, claim, or interest in or against the land other than the following: (If "none" insert the word "none." Do not leave lines blank.)

None

1/ Mining or production from the land is not required, and in the absence of production there is no obligation to pay royalty to the Government.

2/ Either (a) insert the legal description of the land, or (b) strike out the words "as follows" and insert "in a lease [or contract, deed, or other document] dated _____, and recorded in Book _____, Page _____, official records of said county." If (b) is used, the book and page of recordation cannot be dispensed with. If the space provided is insufficient, use an Annex, and refer to the Annex in the space.

5. Undertakes and agrees (a) neither to commit any act nor assert any claim in conflict with the provisions of this Agreement; and (b) to give advance notice of the Government's rights under this Agreement to any subsequent transferee, mortgagee, encumbrancer, or lessee of any of the undersigned's right, title, claim, or interest in or against the land, or any production therefrom furnishing the Government with two copies of such notice; and

6. Consents to all amendments (including an agreement of termination) and assignments of the contract without notice thereof, and undertakes and agrees that this Agreement shall extend and apply thereto.

7. Added provision: _____ (State "None" or "See Annex No.____")

Dated this 31st day of December, 1957.

G. C. Holshue	[Seal]	Basin, Montana	[Address]
Anne F. Holshue	[Seal]	Basin, Montana	[Address]
D. A. Du Bois	[Seal]	Basin, Montana	[Address]
Catherine Du Bois	[Seal]	Basin, Montana	[Address]
	[Seal]		[Address]
	[Seal]		[Address]

I, _____ certify that I am the _____ _____ (Secretary, etc.) of the corporation named herein; that _____ _____ who signed this agreement was then _____ (President or Vice-President, etc.) of said corporation; that said agreement was duly signed for and in behalf of said corporation by authority of its governing body, and was within the scope of its corporate powers.

_____

[Corporate Seal]

MF-205
(Combines and supercedes MF-201 and MF-203)
June 1956

Government's Use Only
EXPLORATION PROJECT CONTRACT
Operator
Docket No. DMEA-
Contract No. Idm-E 1176
Contract Date 14 MAR 1958

RECEIVED
OCT 21 1957
D.M.E.A.

CONSENT TO LIEN
and
SUBORDINATION AGREEMENT 1/

To the United States of America:

Referring to that certain land in the County of Jefferson, State of Montana, described as follows: 2/

Morning Claim, U. S. Patent Survey No. 8518

Midnight Claim, U. S. Patent Survey No. 8519

which is the subject of a proposed exploration project contract, hereinafter called the "contract," with the United States of America, hereinafter called the "Government;" in consideration of the contract and as an inducement to the Government to enter into it, the undersigned hereby--

1. Undertakes and agrees that property in which the Government may acquire an interest or equity under the contract may be dismantled, severed from the land, and removed, as may be provided in the contract; and the Government's interest and equity in such property shall be prior and superior to any adverse right or claim of the undersigned;

2. Grants to the Government a lien upon all of the undersigned's right, title, and interest in the land and upon any production of minerals therefrom, to secure the payment to the Government of a percentage royalty on production as may be provided for by the Contract;

3. Subordinates the undersigned's right, title, claim, or interest in or against the land and in any production therefrom to the rights of the Government under the contract with respect to royalty on production and liens to secure same;

4. Represents and undertakes that there is no claim, lien, or encumbrance upon the undersigned's right, title, claim, or interest in or against the land other than the following: (If "none" insert the word "none." Do not leave lines blank.)

None

1/ Mining or production from the land is not required, and in the absence of production there is no obligation to pay royalty to the Government.

2/ Either (a) insert the legal description of the land, or (b) strike out the words "as follows" and insert "in a lease [or contract, deed, or other document] dated _____, and recorded in Book _____, Page _____, official records of said county." If (b) is used, the book and page of recordation cannot be dispensed with. If the space provided is insufficient, use an Annex, and refer to the Annex in the space.

5. Undertakes and agrees (a) neither to commit any act nor assert any claim in conflict with the provisions of this Agreement; and (b) to give advance notice of the Government's rights under this Agreement to any subsequent transferee, mortgagee, encumbrancer, or lessee of any of the undersigned's right, title, claim, or interest in or against the land, or any production therefrom furnishing the Government with two copies of such notice; and

6. Consents to all amendments (including an agreement of termination) and assignments of the contract without notice thereof, and undertakes and agrees that this Agreement shall extend and apply thereto.

7. Added provision: _____ (State "None" or "See Annex No.____")

Dated this 12th day of October, 1957.

Gil L. Holshue	[Seal]	Basin, Montana	[Address]
Agnes J. Holshue	[Seal]	Basin, Montana	[Address]
D A DuBois	[Seal]	Basin, Montana	[Address]
Catherine DuBois	[Seal]	Basin, Montana	[Address]
	[Seal]		[Address]
	[Seal]		[Address]

I, _____ certify that I am the _____ _____ (Secretary, etc.) of the corporation named herein; that _____ _____ who signed this agreement was then _____ (President or Vice-President, etc.) of said corporation; that said agreement was duly signed for and in behalf of said corporation by authority of its governing body, and was within the scope of its corporate powers.

_____

[Corporate Seal]

EXPLORATION PROJECT CONTRACT
WESTERN AMERICA OF MONTANA, INC.
DOCKET NO. DMEA-4732

EXHIBIT "A"

Description of the Work

The purpose of the project is to explore the Morning vein or other parallel veins for lead-zinc-copper ores. The work is divided into two stages. The Operator shall perform the Stage I work. In the event ore is discovered as a result of the Stage I work, the Operator, with the written approval of the Government, shall perform the Stage II work.

The work shall consist of:

Stage I

1. With a D-8 caterpillar dozer or equivalent unit of another make, prepare six drill sites. Not in excess of 12 hours of bulldozing time shall be allowed for this work.

2. From the surface, diamond drill 6 holes to an average depth of approximately 350 feet each, at an inclination of approximately minus 33°, to explore the Morning vein or other parallel structures. Not more than 2,100 feet of drilling shall be performed. The tentative hole locations are shown on the map entitled, "Midnight-Morning Property, Western America of Montana, Inc. - Plate II," but the actual locations, directions, inclinations, and depths of all holes are subject to prior Government approval. Holes shall be spaced not closer than 100 feet.

All diamond drilling shall be done with AX size, or larger, coring bits, except that with Government approval the hole may be reduced with EX casing and completed with EX size bits when necessary to complete a hole. Drill holes shall be reamed and cased or cemented and redrilled as necessary.

The Government will not contribute to the cost of drilling any hole which is not completed.

All drill holes shall be logged, and all drill core shall be properly labeled and stored and made available to the Government for examination. All significantly mineralized core, in lengths not to exceed 5 feet, shall be split, and one-half thereof shall be properly sampled and assayed for one or more of the following metals: lead, zinc, copper, and silver. Not in excess of 70 determinations shall be allowed for assaying for any one metal.

When drilling in significantly mineralized ground, sludges corresponding to the cores shall be taken (if possible); and in the event that the core recovery does not exceed 70 percent, both core and sludge samples shall be taken at intervals not to exceed 5 feet. Both the core and the sludge shall be split, and one-half thereof properly sampled and assayed. The remaining half of all significantly mineralized core and sludge samples when taken, shall be furnished to the Government upon request.

All assays shall be reported monthly to the Government, together with the logs of the drill holes and proper plan maps and sections showing the progress of the work and the sample locations.

All drilling and sample preparation shall be properly supervised by competent engineers and geologists.

Stage II

1. At an elevation corresponding to that of the 245 level, drive an adit crosscut to the Morning vein and then drift on the vein; the total drifting and crosscutting shall not exceed 1,150 feet. The crosscut and drift shall not be less than 5 feet by 7 feet in the clear of timber. The crosscut and drift are tentatively shown on the map (Plate II, cited in Stage I) but the location, direction, and extent of the crosscut and drift are subject to prior Government approval.

2. Not in excess of 570 feet of timbering will be allowed for the crosscut and drift. Timber sets shall consist of not less than 8-inch by 8-inch timber or the equivalent in round timber.

3. Cut a car transfer station in the crosscut or drift, which will be equivalent to 10 feet of crosscutting or drifting.

4. Not to exceed 520 feet of long-hole drilling shall be performed on the 245 level to test for parallel structures to the Morning

vein. Where mineralization is encountered by the long-hole drilling, sludge samples shall be taken at intervals not to exceed 5 feet; the samples shall be split and one-half thereof shall be properly sampled and assayed. The remaining half of all mineralized sludge samples shall be furnished to the Government upon request. All assays shall be reported monthly to the Government together with drill logs and proper plan maps showing the progress of the work and the sample locations.

5. All samples from the long-hole drilling and the drifting and crosscutting shall be assayed for one or more of the following metals: lead, zinc, copper, and silver. Not to exceed 80 determinations shall be allowed for the assaying for any one metal.

Estimated Costs of the Project

Actual Costs

Stage I

Category (1) Independent Contracts

12 hours of bulldozing @ $15.00/hr.	$180.00
Diamond Core Drilling	
Driving pipe through overburden 150 feet @ $9.00/ft.	
BX size drilling, 0 - 250-foot depth, 150 feet @ $6.60/ft.	
AX size drilling, 0 - 250-foot depth, 1,200 feet @ $6.00/ft.	
EX size drilling, 0 - 250-foot depth, @ $5.70/ft.	
AX size drilling, depth greater than 250 feet, 600 feet @ $6.60/ft.	
EX size drilling, depth greater than 250 feet, @ $6.30/ft.	
	13,500.00

Reaming and casing, 700 feet @ $3.90/ft.	$2,730.00	
Cementing and redrilling, 200 feet @ $3.90/ft., or 81.25 hours @ $9.60/hr.	780.00	
Mobilization and demobilization of diamond drill equipment, 5 hours @ $10.00/hr.	50.00	$17,240.00

The above rates include charges for water supply, changing of locations, and all other charges by the diamond drill contractor.

Neither the cost nor the value of the casing left in drill holes at the option of the Operator will be allowed as a charge to the Contract.

Category (2) Personal Services

Subcategory (a) Supervision

Supervisor, 2-1/2 months @ $300.00/mo.	$750.00	

Subcategory (b) Technical Services

Consulting engineer or geologist 9 days @ $50.00/day	450.00	

Subcategory (c) Labor

None		$1,200.00

Category (3) Operating Materials and Supplies

None except

Core boxes (wooden)		$200.00

Categories (4) through (6)

None

Category (7) Miscellaneous

None except

280 assay determinations @ $1.00/ea.*		$280.00
Estimated total actual costs of Stage I		$18,920.00

Stage II

The Government will contribute to the costs of drifting, crosscutting, timbering, cutting car transfer station, and long-hole drilling on the basis of Subcategories (2)(a) and (2)(c), Category (3), and Subcategory 4(c), for which estimated costs are set forth or waived below: Provided, That the Government will not contribute to any portion of the aggregate cost of a work item that exceeds on an average the estimated unit cost for such items, as follows:

Drifting and crosscutting 1,150 feet @ $33.00/ft.*	$37,950.00	
Timbering, 570 feet @ $7.00/ft.*	3,990.00	
Cutting car transfer station 10 feet @ $33.00/ft.*	330.00	
Long-hole drilling, 520 feet @ $1.25/ft.*	650.00	$42,920.00

Category (1) Independent Contracts

None

Subcategories (2)(a) and (2)(c), and Category (3)

Estimates waived

Subcategory (4)(c) Depreciation

1 Jeep station wagon	$32.33/mo.
1 Ford dump truck	33.33/mo.
1 Mancha trammer	65.80/mo.
1 Storage battery charger	4.16/mo.
1 Thor air leg (used)	8.33/mo.
1 Thor air leg (new)	14.75/mo.
12 Mine cars	35.00/mo.
1 Canton car transfer	9.16/mo.
1 500 c.f.m. compressor (port.)	108.33/mo.
2 Ventilation fans @ $12.50/mo./ea.	25.00/mo.
1 Mucking machine	33.33/mo.
1 Electric generating plant	22.50/mo.
5 Miners head lamps	5.42/mo.

Additional Actual Costs

In addition to the costs of Stage II set forth above, the Government will also contribute to the actual costs of the following:

Category (2) Personal Services		
Subcategory (b) Technical Services		
Consulting engineer and/or geologist 30 days @ $50.00/day		$ 1,500.00
Category (6) New Buildings, Fixtures, and Installations		
Compressor house and tool shed		250.00
Category (7) Miscellaneous		
320 assay determinations @ $1.00/ea.*		320.00
Estimated Total Actual Costs of Stage II		$44,990.00

S U M M A R Y

Estimated total Cost of Stage I	$18,920.00	
Estimated Total Cost of Stage II	44,990.00	
Estimated Total Cost of the Project		$63,910.00
Government Participation @ 50%		$31,955.00

* In addition to the maximums fixed in the contract form, an asterisk indicates maximum.

UNITED STATES
DEPARTMENT OF THE INTERIOR
DEFENSE MINERALS EXPLORATION ADMINISTRATION
So. 157 Howard Street
Spokane 4, Washington

RECEIVED JUN 2 1958

6/2 220
6/3 Ring 500

May 29, 1958

Mr. George C. Selfridge, Chairman
Operating Committee, DMEA
Department of the Interior
Washington 25, D. C.

Re: Docket No. DMEA-4732 (Lead-Zinc-Copper)
Western America of Montana, Inc.
Morning Mine
Jefferson County, Montana

Dear Mr. Selfridge:

Enclosed are three copies of a letter dated May 19, 1958 received from Mr. E. K. Cheadle, Secretary of Western America of Montana, returning some of the copies of the contract, and three copies of our reply. As soon as Mr. Cheadle returns the Audit Copy of the contract which he has retained, we shall send all of the copies to you.

Sincerely yours,

A. E. Weissenborn
A. E. Weissenborn
Executive Officer, DMEA
Field Team Region I

Enclosures 2 (in trip.)

cc: USBM (2)
USBM(AD)
Prinz

RECEIVED

So. 157 Howard Street
Spokane 4, Washington

May 29, 1958

Mr. E. K. Cheadle
Fratt Building
P. O. Box 963
Billings, Montana

Re: Docket No. DMEA-4732 (Lead-Zinc-Copper)
Western America of Montana, Inc.
Morning Mine
Jefferson County, Montana

Dear Mr. Cheadle:

This will acknowledge your letter dated May 19, 1958 (received May 28, 1958) with which you enclosed the original and three copies of proposed DMEA contract Idm-E1176. We note that although you say you are returning the contract unsigned, you have signed it but have not completed the certification of signature. However, it is clear from your letter that Western America of Montana is abandoning its lease on the Morning, Midnight, and Cindy claims and does not wish to accept a DMEA contract.

Whenever a proposed contract is not acceptable to an applicant we are requested to return all copies to the Administrator, Defense Minerals Exploration Administration, who has already signed them. Therefore we must ask you to return the fourth carbon copy, marked "Audit Copy", which you have retained.

The enclosed copy of a letter to Nevada Agency and Trust Company was with the DMEA contract which you returned and evidently was included in error.

We are sorry that Western America of Montana cannot accept the contract and we wish to thank you for your cooperation.

Sincerely yours,

A. E. Weissenborn
Executive Officer, DMEA
Field Team Region I

Enclosure

cc: DMEA (3); USBM (2); USBM(AD); Prinz

LAW OFFICE OF
E. K. CHEADLE
PRATT BUILDING
P. O. BOX 963
BILLINGS, MONTANA
TELEPHONE 2-6450

May 19, 1958

Department of the Interior
Defense Minerals Exploration Administration
South 157 Howard Street,
Spokane 4, Washington

Re: Docket No. D.M.E.A. - 4732
Western America of Montana
Morning Mine - Jefferson County,
Montana

ATTENTION: MR. WEISSENBORN

Dear Mr. Weissenborn:

I am sorry to have to advise you that the directors of Alscope Explorations, Ltd., the parent company of Western America of Montana, have now definitely decided to abandon the Morning-Midnight lease in Jefferson County, and for that reason have instructed to return the above contract to you unsigned. Accordingly, I am enclosing herewith four copies, on the assumption that it will be satisfactory with your office that we retain one copy for our files.

I want you to know that I greatly appreciate your consideration in connection with this matter, and sincerely trust that this action by our board will not result in any confusion or inconvenience to your office.

Thanking you, I am,

Very truly yours,

E K Cheadle
Secretary

EKC:jb

RECEIVED
MAY 28 1958
SPOKANE WASH

UNITED STATES
DEPARTMENT OF THE INTERIOR
DEFENSE MINERALS EXPLORATION ADMINISTRATION
So. 157 Howard Street
Spokane 4, Washington

May 22, 1958

OFFICIAL FILE COPY
DMEA
RECEIVED 26
Dist
1/26 C 220
2/26 Dly 500

Mr. George C. Selfridge, Chairman
Operating Committee, DMEA
Department of the Interior
Washington 25, D. C.

Re: Docket No. DMEA-4732 (Lead-Zinc-Copper)
Western America of Montana, Inc.
Morning Mine
Jefferson County, Montana

Dear Mr. Selfridge:

Enclosed are two copies of a letter from E. K. Cheadle in reply to our letter of May 6, 1958.

As we did not understand his reference to "continued negotiations concerning the lease," we telephoned him May 14, 1958 for clarification. Apparently Cheadle is trying to buy the interests of some Canadians in the company. He expects to close the deal in a few days after which he will sign the contract. We will call him again on the 26th if we hear nothing further by that date.

As soon as we receive the signed contract, we will prepare an amendment postponing the starting date.

Sincerely yours,

A. E. Weissenborn

A. E. Weissenborn
Executive Officer, DMEA
Field Team, Region I

Enclosures

cc: USBM (2) w/2 copies of encl.
USBM (AD) w/copy of encl.
Prinz

LAW OFFICE OF
E. K. CHEADLE
FRATT BUILDING
P. O. BOX 963
BILLINGS, MONTANA
TELEPHONE 9-8480

May 8, 1958

RECEIVED 26

Mr. A. E. Weissenborn
Defense Minerals Exploration Administration
Sec. 157 Howard Street,
Spokane 4, Washington

Re: Docket No. DMEA-4722

Dear Mr. Weissenborn:

This will acknowledge receipt of your letter of May 5, with reference to the above contract.

I am sorry for the delay in returning this contract, which was in part caused by continued negotiations concerning the lease on the involved properties.

I believe that these matters have now been practically settled, and hope to be able to write you definitely within the next week. In the meantime, if possible, I will greatly appreciate your continued consideration of this matter and will take every effort to have definite act on taken within that period.

Thanking you, I am,

Sincerely yours,

E. K. Cheadle

EKC:jb
CC: Nicholas Martini

OFFICIAL FILE COPY
DMEA
RECEIVED MAY 8 1958

DATE	INITIALS	CODE
5/8	C	220
5/8	[illegible]	[illegible]

XDXXXXXX-155K

YWB204 WAF SP 27 I-GS-G

SPOKANE WASH 5-7-58 1650U

GEORGE C SELFRIDGE, CHAIRMAN OPERATING COMMITTEE

DMEA, WA

REURTT MAY 7 DMEA 4732, WESTERN AMERICA OF MONTANA INC. WE WROTE THE COMPANY MAY 6 ASKING THEM TO EITHER SIGN THE CONTRACT OR RETURN IT UNSIGNED. COPIES OF OUR LETTER MAILED TO YOU YESTERDAY.

A E WEISSENBORN, USGS, SP

7 4732 6

EKC 1653U

OFFICIAL FILE COPY
DMEA
RECEIVED MAY 9 1958

DATE	INITIALS	CODE
5/9	C	220
5/9	[illegible]	500

So. 157 Howard Street
Spokane 4, Washington

May 6, 1958

Mr. E. K. Cheadle
Fratt Building
P. O. Box 963
Billings, Montana

Re: Docket No. DMEA-4732 (Lead-Zinc-Copper)
Western America of Montana, Inc.
Morning Mine
Jefferson County, Montana

Dear Mr. Cheadle:

This is in reference to our letter of April 4, 1958, and your reply of April 10, 1958, regarding the original and four copies of a proposed contract we sent to Mr. T. V. Leonard March 26, 1958.

In your April 10 letter you say that it is your belief that the terms of the contract are satisfactory but that you would prefer to obtain the concurrence of one of the officers who was at that time not available; that you expected to get his concurrence "within the next few days," and would then return the executed copies. To date we have heard nothing further.

We have prepared an amendment extending the starting date to June 1, 1958, in accordance with your request and as soon as we receive the signed copies of the contract, we will forward them to you. If you have decided not to sign the contract, please return all copies, unsigned, to this office with your comments.

Your prompt attention will be appreciated.

Sincerely yours,

A. E. Weissenborn
Executive Officer, DMEA
Field Team, Region I

cc: DMEA (2) w/2 copies of incoming
USBM (2) " " " "
USBM (AD) w/copy " "
Prinz

LAW OFFICE OF
E. K. CHEADLE
PRATT BUILDING
P. O. BOX 663
BILLINGS, MONTANA
TELEPHONE 9-8450

April 10, 1958

OFFICIAL FILE COPY
DMEA
RECEIVED 9 1958
DATE 5/4 Rly SOD

Mr. A. E. Weissenborn
Executive Officer, DMEA
Field Team Region I
So. 157 Howard Street
Spokane 4, Washington.

Re: Docket No. DMEA-4732 (Pb-Zn-Cu)
Morning Mine
Jefferson County, Montana.

Dear Mr. Weissenborn:

This will acknowledge receipt of your letter of April 4th, with reference to the above DMEA contract, please be advised that Mr. Leonard has forwarded five copies of the contract to me for processing. It is my belief that the terms of the contract are satisfactory, but feel that I should obtain the concurrence of one of the officers, who is presently out of the state. I expect that this will be accomplished within the next few days, and I will then forward the executed copies to you. If this delay will in anyway endanger the contract, I will appreciate it if you will call me collect at Billings, No. 9-8450, so that the contract may be forwarded at once.

In view of the circumstances outlined by Mr. Leonard, request will be made to change the starting date to on or before June 1st.

Thanking you for your consideration, I am

Very truly yours,

E. K. CHEADLE

EKC/rc

cc- T. V. Leonard

RECEIVED
APR 1958
U.S.D.
SPOKANE

(5)

WESTERN AMERICA OF MONTANA

TELEPHONE: HICKORY 2-2654
P. O. Box 782
HELENA, MONTANA

March 28, 1958

OFFICIAL FILE COPY
DMEA
RECEIVED MAY 9 1958

DATE	INITIALS	CODE
5/9	C	226
5/9	Klery	500

Mr. A. E. Weissenborn, Executive Officer, DMEA
United States Department of the Interior
Defense Minerals Exploration Administration
So. 157 Howard St.
Spokane 4, Washington

Dear Mr. Weissenborn:

Re: Docket No. DME-[illegible]
(Lead-Zinc-Copper)
Morning Mine
Jefferson County, Montana

We are in receipt of your letter of March 26, 1958 and are sending the contracts to E. K. Cheadle for processing.

We note that the work under this contract is to start on or before April 1, 1958, however this would be impossible because of the snow and road condition up to the mine. It will take 10 days to plow out and repair the road. Then it will have to dry out before the equipment can be moved in. This will take about a week or ten days. Also the drilling contractor requires a 30 day notice to start drilling.

Due to the high elevation of the mine, we have never been able to start spring operations economically before May 15th in the past. Therefore I believe the starting date should read on or before May 15, 1958.

Until further notice, please send all future correspondence to E. K. Cheadle, Sec'y, P. O. Box 963, Billings, Montana.

Yours very truly,

T. V. Leonard

TVL:cvl
cc: Cheadle
Bousher

DMEA

Air mail
APR 1[illegible] 1958

U.S.P.O.
SPOKANE, WASH.

DMEA Form 7
(12-56)

OFFICIAL FILE COPY

Date	Surname	Code
5/7	Klugescheid	500
		500
		130
		130
		130
		110
		100
		220
		500

MAY 7 1958

WPKlugescheid/er Rm 4444, Ext. 2690

DMEA - Division of Base Metals

14X4401(01 Revolving Fund,
Defense Production Act, Interior,
(Transfer to Office of Secy.)

T E L E T Y P E

XXXXXXXXXXXXXXXXXXXXXXXXXXXXXXXXXXXXXXXXXXXX
XXXXXXXXXXXXXXXXXXXXXXXXXXXXXXXXXXXXXXXXXXXX

Date:

To: Mr. A. E. Weissenborn, Executive Officer, DMEA Field Team, Region I, Spokane, Washington

Reurtt May 6, Docket No. DMEA-4588, John Zupan. Expect final action on application in about one week.

Docket No. DMEA-4732, Western America of Montana, Inc. What is status of this contract?

George C. Selfridge

Chairman, Operating Committee

WPKlugescheid/er 5/7/58
Copy to: Docket (2)
Admr R File
Op. Committee
Mr. Bishop, USBM
Mr. Kiilsgaard, USGS
Chron.

8623

DMEA
RECEIVED APR 8 1958

DATE		
4/7	C	820
4/7	WRS	SEC

So. 157 Howard Street
Spokane 4, Washington

April 4, 1958

Mr. E. K. Cheadle, Secretary
Western America of Montana
P. O. Box 963
Billings, Montana

Re: Docket No. DMEA-4732 (Pb-Zn-Cu)
Morning Mine
Jefferson County, Montana

Dear Mr. Cheadle:

In a letter dated March 28, 1958, Mr. T. V. Leonard advises us that he has sent you the original and four copies of a proposed DMEA contract for processing, and has instructed us to address future correspondence regarding DMEA matters to you.

Mr. Leonard also advises us of certain valid reasons why work under the contract cannot be started by April 1, 1958, and that he believes that the starting date should be on or before May 15, 1958. If the contract is otherwise acceptable, you may sign it as it is and as soon as we receive the signed copies, except for the one marked Operator's Copy which you should retain, we will prepare an amendment changing the starting date to on or before May 15. If you feel that June 1 might be a better starting date, please inform us when you return the signed copies of the contract.

If you have any other objections, you should return all five copies unsigned with a statement of your objections and suggested changes and we will attempt to have them incorporated into a new contract.

Sincerely yours,

A. E. Weissenborn
Executive Officer, DMEA
Field Team Region 1

cc: T. V. Leonard
DMEA (2)
USBM (2)
Prinz

RECEIVED MAR 28 1958

DATE		
3/24		220
3/28		550

So. 157 Howard Street
Spokane 4, Washington

March 26, 1958

Mr. T. V. Leonard, President
Western America of Montana, Inc.
P. O. Box 782
Helena, Montana

Re: Docket No. DMEA-4732 (Lead-Zinc-Copper)
Morning Mine
Jefferson County, Montana

Dear Mr. Leonard:

We received the book and page numbers for the Cindy No. 6 and the Morning Extension claims from Mr. David Bower this morning and have inserted this information in the contract. If this contract meets with your approval, would you please sign the original and four copies, retain that copy marked for the Operator and return the rest to this office. If any part of the contract does not meet with your approval, please return unsigned all copies, including the original, with your comments.

You will note that work is to commence on or before April 1, 1958. Please inform us the date work is started; if, for any reason, work cannot be started by that date, please inform us.

Your attention is called particularly to Article 8(b) of the contract which deals with repayment by the operator from royalty on production. Any production from the land described in the contract is subject to the royalty provisions of the contract whether or not the ore was known to exist prior to the date of the contract or it is discovered or developed by the work under the contract. This applies to all production during the period in which the Government may certify or, if the project is certified, to all production during the repayment period specified in the contract.

Sincerely yours,

A. E. Weissenborn
Executive Officer, DMEA
Field Team, Region I

Enclosures

cc: DMEA (2) w/2 copies of Bower's letter
USBM (2) " " " " "
USBM (AD)
Prinz

WESTERN AMERICA OF MONTANA
TELEPHONE: HICKORY 2-2654
P. O. BOX 782
HELENA, MONTANA

ORIGINAL FILE COPY
DMEA
RECEIVED MAR 28 1958
DATE | INITIALS | CODE

March 24, 1958

Mr. A. E. Weissenborn
Executive Officer, D.M.E.A.
Field Team, Region I
United States Department of the Interior
South 157 Howard Street
Spokane 4, Washington

Re: Docket No. DMEA-4732
(Lead-Zinc-Copper)
Morning Mine
Jefferson County, Montana

Dear Mr. Weissenborn:

Reference is made to the above captioned subject in answer to your letter of March 21, to Western America of Montana. I wish to give you the following information:

Cindy #6 is Book 48 Page 595

Morning Extension is Book 48 Page 597.

I will gladly furnish you any further information you may need.

Sincerely yours,

David Bower

DB:cek

RECEIVED
MAR 1958
SPOKANE

MAR 27 1958		
3/27	C	130
3/27	~~[illegible]~~	~~500~~

So. 157 Howard Street
Spokane 4, Washington

March 21, 1958

Mr. T. V. Leonard, President
Western America of Montana, Inc.
P. O. Box 782
Helena, Montana

Re: Docket No. DMEA-4732 (Lead-Zinc-Copper)
Morning Mine
Jefferson County, Montana

Dear Mr. Leonard:

We have just received from Washington an original and four copies of a proposed long form contract for exploration at the Morning mine. However, before we can send the contract to you for signature we have been instructed to insert the book and page number for the Cindy No. 6 and the Morning Extension claims. We did not expect these claims to be included in the contract but apparently they are included because they appear on the lease which Mr. Miller sent us on January 14, 1958.

I tried to call you on the telephone this afternoon but was unable to reach you. If you care to, telegraph or telephone us the requested information. As soon as we receive it, we will mail you the contract for signature.

Sincerely yours,

A. E. Weissenborn
Executive Officer, DMEA
Field Team, Region I

cc: DMEA (2)
USBM (2)
Prinz

DMEA Form 7
(12-56)

OFFICIAL FILE COPY

Date	Surname	Code
3/3	Klugescheid	500
"	Hrome	500
"	Chamber	800
3/12	[illegible]	130
"	Jackson	110
130	Rutledge	100
		~~HB~~
3/14	C	220
		500

500

MAR 14 1958

Mr. A. E. Weissenborn
Executive Officer
DMEA Field Team, Region I
South 157 Howard Street
Spokane 4, Washington

Re: Docket No. DMEA-4732 (Lead-Zinc-Copper)
Western America of Montana, Inc.
Morning Mine
Jefferson County, Montana

Dear Mr. Weissenborn:

Enclosed are the original and four copies of a proposed long-form contract for the cited project, signed by the Administrator, Defense Minerals Exploration Administration. It consists of the Form (MF-200), Annex I (2 pages), Consent to Lien and Subordination Agreement (2 pages), Exhibit "A" (6 pages), and one map. We are also enclosing two extra copies of Annex I, Exhibit "A" and the map for the use of the Field Team.

In Annex I, the book and page number for the Cindy No. 6 and Morning Extension claims have been omitted as we do not have them. Will you kindly have these inserted before sending out the contract.

If the proposed contract meets with your approval, kindly present it to the Applicant for approval and signature and, when completed, distribute the copies in the usual manner. In the event that the contract is not satisfactory, and cannot be amended within your delegated authority, return all the copies to us with your recommendations concerning any modifications.

Sincerely yours,

George C. Selfridge

Chairman, Operating Committee (GCS)
WPKlugescheid/er 3/3/58
Copy to: Docket
dmr R File
Op. Committee
Mr. Bishop, USBM
Mr. Kiilsgaard, USGS
Chron.

Enclosures
APPROVED:

Frank D. Lamb (GCS)
Member, Bureau of Mines

Thor H. Kiilsgaard (GCS)
Member, Geological Survey

8623

When drilling in significantly mineralized ground, sludges corresponding to the cores shall be taken (if possible), and in the event that the core recovery does not exceed seventy per cent, both core and sludge samples shall be taken at intervals not to exceed five feet. Both the core and sludge shall be split, and one half thereof properly sampled and assayed.

In the event oil is discovered as a result of the Stage I work, the Operator, with the written approval of the Govt., shall perform the Stage II work.

EXPLORATION PROJECT CONTRACT
WESTERN AMERICA OF MONTANA, INC.
DOCKET NO. DMEA-4732

EXHIBIT "A"

Description of the Work

The purpose of the project is to explore the Morning vein or other parallel veins for lead-zinc-copper ores. The work is divided into two stages. The Operator shall perform the Stage I work. ~~and as much of the Stage II work as is approved in advance by the Government.~~

The work shall consist of:

Stage I

1. With a D-8 caterpillar dozer or equivalent unit of another make, prepare six drill sites. Not in excess of 12 hours of bulldozing time shall be allowed for this work.

2. From the surface, diamond drill 6 holes to an average depth of approximately 350 feet each, at an inclination of approximately minus 33°, to explore the Morning vein or other parallel structures. Not more than 2,100 feet of drilling shall be performed. The tentative hole locations are shown on the map entitled "Midnight-Morning Property, Western America of Montana, Inc. - Plate II," but the actual locations, directions, inclinations, and depths of all holes are subject to prior Government approval. Holes shall be spaced not closer than 100 feet.

All diamond drilling shall be done with AX size, or larger, coring bits, except that with Government approval the hole may be reduced with EX casing and completed with EX size bits when necessary to complete a hole. Drill holes shall be reamed and cased or cemented and redrilled as necessary.

The Government will not contribute to the cost of drilling any hole which is not completed.

All drill holes shall be logged, and all drill core shall be properly labeled and stored and made available to the Government for examination. All significantly mineralized core, in lengths not to exceed 5 feet, shall be split, and one half thereof shall be properly sampled and assayed for one or more of the following metals: lead, zinc, copper, and silver. Not in excess of 70 determinations shall be allowed for assaying for any one metal.

In the event that core recovery in a significantly mineralized section does not exceed 70 per cent, both core and sludge samples shall be taken, if possible, at intervals not ~~to exceed 5 feet~~. Both the core and the sludge shall be split, and one half thereof properly sampled and assayed. The remaining half of all significantly mineralized core and sludge samples when taken, shall be furnished to the Government upon request.

All assays shall be reported monthly to the Government, together with the logs of the drill holes and proper plan maps and sections showing the progress of the work and the sample locations.

All drilling and sample preparation shall be properly supervised by competent engineers and geologists.

Stage II

1. On the 245 level, crosscut to the Morning vein and then drift on the vein; the total drifting and crosscutting shall not exceed 1,150 feet. The crosscut and drift shall not be less than 5 feet by 7 feet in the clear of timber. The crosscut and drift are tentatively shown on the map (Plate II, cited in Stage I) but the location, direction, and extent of the crosscut and drift is subject to prior Government approval.

2. Not in excess of 570 feet of timbering will be allowed for the crosscut and drift. Timber sets shall consist of not less than 8-inch by 8-inch timber or the equivalent in round timber.

3. Cut a car transfer station in the crosscut or drift, which will be equivalent to ten feet of crosscutting or drifting.

4. Not to exceed 520 feet of long-hole drilling shall be performed on the 245 level to test for parallel structures to the Morning vein. Where mineralization is encountered by the long-hole drilling, sludge samples shall be taken at intervals not to exceed 5 feet; the samples shall be split and one half thereof shall be properly sampled and assayed. The remaining half of all mineralized sludge samples shall be furnished to the Government upon request. All assays shall be reported monthly to the Government together with drill logs and proper plan maps showing the progress of the work and the sample locations.

At an elevation corresponding to that of the 245 level, drive an adit crosscut to the Morning vein and etc.

5. All samples from the long-hole drilling and the drifting and crosscutting shall be assayed for one or more of the following metals: lead, zinc, copper, and silver. Not to exceed 80 determinations shall be allowed for the assaying for any one metal.

Estimated Costs of the Project

Actual Costs

Stage I

Category (1) Independent Contracts

12 hours of bulldozing @ $15.00/hr.	$ 180.00	
Diamond Core Drilling		
Driving pipe through overburden 150 feet @ $9.00/ft.		
BX size drilling, 0 - 250-foot depth, 150 feet @ $6.60/ft.		
AX size drilling, 0 - 250-foot depth, 1,200 feet @ $6.00/ft.		
EX size drilling, 0 - 250-foot depth, @ $5.70/ft.		
AX size drilling, depth greater than 250 feet, 600 feet @ $6.60/ft.		
EX size drilling, depth greater than 250 feet, @ $6.30/ft.		
	13,500.00	
Reaming and casing, 700 feet @ $3.90/ft.	2,730.00	
Cementing and redrilling, 200 feet @ $3.90/ft., or 81.25 hours @ $9.60/hr	780.00	
Mobilization and demobilization of diamond drill equipment, 5 hours @ $10.00/hr.	50.00	$17,240.00

or 81.25 hours @ $9.60/hr.

The above rates include charges for water supply, changing of locations, and all other charges by the diamond drill contractor.

Neither the cost nor the value of the casing left in drill holes at the option of the Operator will be allowed as a charge to the contract.

Category (2) Personal Services		
Subcategory (a) Supervision		
Supervisor, 2-1/2 months @ $300.00/mo.	$ 750.00	
Subcategory (b) Technical Services		
Consulting engineer or geologist 9 days @ $50.00/day	450.00	
Subcategory (c) Labor		
None		$ 1,200.00
Category (3) Operating Materials and Supplies		
None except		
Core boxes (wooden)		200.00
Categories (4) through (6)		
None		
Category (7) Miscellaneous		
None except		
280 assay determinations @ $1.00/ea.*		280.00
Estimated Total Actual Costs of Stage I		$18,920.00

UNITED STATES
DEPARTMENT OF THE INTERIOR
OFFICE OF THE SOLICITOR
WASHINGTON 25, D. C.

FEB 28 1958

Memorandum

To: Administrator, DMEA
Attention: W. R. Griswold

From: Associate Solicitor, Division of Mineral Resources

Subject: Docket No. DMEA-4732, Western America of Montana, Inc.
Lead, Zinc, and Copper

As requested in Mr. Griswold's memorandum of February 17, we have prepared the attached contract in satisfactory legal form for execution, subject to the insertion in Annex I of the book and page number for the Cindy No. 6 and Morning Extension claims.

Robert P. Dwyer

Attachment

MEA Form 7
(12-56)

OFFICIAL FILE COPY

Date	Surname	Code
2/17	Klugescheid	500.

500

February 17, 1958

Memorandum

To: Associate Solicitor, Division of Minerals Resources

From: Director, Division of Base Metals

Subject: Preparation of Contract for Docket No. DMEA-4732, Western America of Montana, Inc., Morning Mine, Jefferson County, Montana, Lead-Zinc-Copper.

Will you please prepare a contract for the cited application. A draft of the contract, Exhibit "A" and Annex I are attached to this memorandum. Copies of two Consents to Lien and the necessary maps are also attached.

W. E. Griswold

W. E. Griswold

WPKlugescheid/er
Copy to: Docket
Chron.

8623

UNITED STATES
DEPARTMENT OF THE INTERIOR
DEFENSE MINERALS EXPLORATION ADMINISTRATION
So. 157 Howard Street
Spokane 4, Washington

OFFICIAL FILE COPY
DMEA
RECEIVED JAN 1958
1/20 gb 220
1/21 500
Khz.

January 16, 1958

Mr. George C. Selfridge, Chairman
Operating Committee, DMEA
Department of the Interior
Washington 25, D. C.

Re: Docket No. DMEA-4732 (Lead-Zinc-Copper)
Western America of Montana, Inc.
Morning Mine
Jefferson County, Montana

Dear Mr. Selfridge:

Enclosed are three copies of a letter dated January 14, 1958 from Richard N. Miller in reply to our letter of November 18, 1957. Also enclosed are three copies of a lease between G. C. Holshue and D. A. DuBois and Western America of Montana, Inc. on eight unpatented claims, including those mentioned in your letter of October 18, 1957, and the original and four copies of Consent to Lien and Subordination Agreement covering the claims included in the list.

Regarding the fourth paragraph of your letter dated November 8, 1957, apparently the examiners were misinformed regarding the locator of the claims or else misunderstood their informant. In any case, the enclosed lease and consent to lien should clarify the point. All the claims included in the lease are located on Plate II accompanying the examination report.

By Field Team, Region I

A. E. Weissenborn

A. E. Weissenborn, Exec. Officer
U. S. Geological Survey

Wing G. Agnew

Wing G. Agnew, Member
U. S. Bureau of Mines

Enclosures

cc: USBM (2)
Prinz

WESTERN AMERICA OF MONTANA

TELEPHONE HIGH 2 2656

[illegible] THE

[illegible] MONTANA

[illegible]

Mail Bill of NM WMEA Ready - [illegible] for our [illegible] ASAP 3 cp of [illegible] the same [illegible]

[illegible] States Department of the Interior
[illegible] Exploration Administration
[illegible] Street
[illegible], Washington

Re: Docket No. [illegible] Leasing-
Copper

Enclosures [illegible] consent to lein and Subordination [illegible] agreement and 5 copies (one copy [illegible] photostats) of mining leases [illegible] patented claims [illegible] Morning Extension, and [illegible] Jefferson County, Montana

[illegible] consent to lein [illegible] recently executed [illegible] patented claims [illegible] Jefferson County, Montana. It is [illegible] that these last [illegible] will comply in [illegible] with the requests in your letter dated January [illegible], and that you can now continue [illegible] the loan [illegible]

It would be [illegible] if you would in the [illegible] additional [illegible] concerning the loan [illegible] the above address. [illegible] longer in the [illegible] of Western America of Montana.

Very truly yours,

Richard [illegible] Miller
Geological Engineer

[illegible]

DMEA

So. 157 Howard Street
Spokane 4, Washington

OFFICIAL FILE COPY
DMEA
RECEIVED JAN 13 1958
DATE INIT. CODE
1/13 gb 220
1/13 wb 500

January 8, 1957

Mr. T. V. Leonard, President
Western America of Montana, Inc.
P. O. Box 782
Helena, Montana

Re: Docket No. DMEA-4732 (Lead-Zinc-Copper)
Morning Mine
Jefferson County, Montana

Dear Mr. Leonard:

This is in further reference to our letter of October 24, 1957 to which Mr. Miller replied on October 28, 1957 and our letter of November 18, 1957 to Mr. Miller to which no reply has been received.

We advised Mr. Miller that "we have been advised by our Washington office of a conflict that needs clarification. Our field examiners understood that the claims surrounding the Midnight and Morning claims, which you have agreed to add to the ground included in the DMEA project, were located by Western America of Montana. According to your letter they are located by Gilbert C. Holshue and D. A. DuBois of Basin, Montana.

The lease accompanying the application includes only the Morning and Midnight claims. Therefore, we will need a lease covering the Cindy 1 through 5 claims inclusive, and the Midnight extension. If these claims have been leased to Western America Uranium Exploration Corporation, we will also need an assignment of lease from the latter corporation to Western America of Montana. These documents may be photostats or true copies of the originals but must show all signatures." We will also need five copies of a Consent to Lien and Subordination Agreement, six blank copies of which were included with our letter to Mr. Miller for execution by the lessors.

We hope that receipt of these documents will clear the path of further difficulties. An early reply will be appreciated.

Sincerely yours,

A. E. Weissenborn
Executive Officer, DMEA
Field Team, Region I

cc: DMEA (2)
USBM (2)
Prinz

OFFICIAL FILE COPY
DMEA
RECEIVED DEC 2 1957

DATE	INITIAL	CODE
12/2	C	220
12/2	Jwa	500

xxxxxxxxxxxxxxxxxxx
So. 157 Howard Street
Spokane 4, Washington

November 18, 1957

Mr. Richard N. Miller
Geological Engineer
Western America of Montana
P. O. Box 782
Helena, Montana

Re: Docket No. DMEA-4732 (Lead-Zinc-Copper)
Western America of Montana, Inc.
Morning Mine
Jefferson County, Montana

Dear Mr. Miller:

In further reference to our letter of October 24, 1957, addressed to Mr. Leonard and your reply of October 28, 1957, we have been advised by our Washington office of a conflict that needs clarification.

Our field examiners understood that the claims surrounding the Midnight and Morning claims, which you have agreed to add to the ground included in the DMEA project, were located by Western America of Montana. According to your letter they are located by Gilbert C. Holshue and D. A. DuBois of Basin, Montana.

The lease accompanying the application includes only the Morning and Midnight claims. Therefore, we will need a lease covering the Cindy 1 through 5 claims inclusive, and the Midnight Extension. If these claims have been leased to Western America Uranium Exploration Corporation, we will also need an assignment of lease from the latter corporation to Western America of Montana. These documents may be photostats or true copies of the originals but must show all signatures. We will also need five copies of a Consent to Lien and Subordination Agreement, six blank copies of which are included for execution by the lessors.

We hope this will finally clear the path of difficulties.

Sincerely yours,

Enclosures

A. E. Weissenborn
Executive Officer, DMEA
Field Team, Region I

cc: DMEA (2)
USBM (2)
Prinz

DMEA Form 7
(12-56)

OFFICIAL FILE COPY

Date	Surname	Code
11/7	[illegible]	500
	[illegible]	500
11/8	Johnson	110
		~~100~~
		~~NB~~
11/8	[illegible]	220
		~~500~~
11/8	[illegible]	130
		500

500

NOV 8 1957

Mr. A. E. Weissenborn
Executive Officer
DMEA Field Team, Region I
South 157 Howard Street
Spokane 4, Washington

Re: Docket No. DMEA-4732 (Lead-Zinc-Copper)
Western America of Montana, Inc.
Morning Mine
Jefferson County, Montana

Dear Mr. Weissenborn:

This is to acknowledge your letter, dated October 30, 1957, and the copy of the letter to you from Mr. Richard N. Miller, Geological Engineer, Western America of Montana, dated October 28, regarding the claims to be included in the application.

Mr. Miller states: "The claims are on record in Jefferson County courthouse in Boulder, Montana. The locators of said claims are Gilbert C. Holshue and D. A. DuBois of Basin, Montana."

The Field Team Examination Report, page 5, stated: "In addition, the corporation located, by right of discovery, eight protective claims (pl. II) surrounding the Morning and Midnight claims . . ."

The above statements are in conflict and will need clarification before we can complete the processing of this application.

If Gilbert C. Holshue and D. A. DuBois are the locators of the claims which we inquired about in our letter of October 18, 1957, and the Applicant has agreed to add them to the land to be included in the application, we must have a copy of the lease and also five copies of Consent To Lien and Subordination Agreement.

We would appreciate an early reply from you so that we may expedite the processing of this application.

Sincerely yours,

George C. Selfridge

Chairman, Operating Committee (JWB)

APPROVED:

Frank D. Lamb (JWB)
Member, Bureau of Mines

Thor H. Kiilsgaard (JWB)
Member, Geological Survey

JWAlt/er 11/7/57
Copy to: Docket
Admr R File
Op. Committee
Mr. Bishop, USBM
Mr. Kiilsgaard, USGS - Chron.

8623

UNITED STATES
DEPARTMENT OF THE INTERIOR
DEFENSE MINERALS EXPLORATION ADMINISTRATION
So. 157 Howard Street
Spokane 4, Washington

OFFICIAL FILE COPY
DMEA
RECEIVED NOV 1 1957

DATE		CODE
11/4	gp	220
11/4		500

October 30, 1957

Mr. George C. Selfridge, Chairman
Operating Committee, DMEA
Department of the Interior
Washington 25, D. C.

Re: Docket No. DMEA-4732 (Lead-Zinc-Copper)
Western America Of Montana, Inc.
Morning Mine
Jefferson County, Montana

Dear Mr. Selfridge:

Enclosed are two copies of a letter dated October 28, 1957 from Richard N. Miller, Geological Engineer, Western America of Montana, in which he agrees to include in the contract the additional claims requested in your letter of October 18, 1957. Also included in Mr. Miller's letter are the book and page numbers of the respective recordings.

Sincerely yours,

A. E. Weissenborn by DEM

A. E. Weissenborn
Executive Officer, DMEA
Field Team, Region I

Enclosures

cc: USBM (2)
Prinz

WESTERN AMERICA OF MONTANA

TELEPHONE HIGHER 2-2659

P. O. Box 782

HELENA MONTANA

October 28, 1957

OFFICIAL FILE COPY
DMEA
RECEIVED NOV 4 1957

DATE	INITIAL	CODE

Mr. A. E. Weissenborn, Executive Officer, DMEA
United States Department of Interior
Defense Minerals Exploration Administration
South 157 Howard Street
Spokane 4, Washington

Re: Docket No. DMEA-4732 (Lead-Zinc-Copper)

Subject: Additional Claims to be included under Exploration Contract.

Dear Mr. Weissenborn:

In regard to your letter of October 24, 1957, [illegible] request concerning our willingness to add additional claims to the group [illegible] we are more than happy to include the following unpatented claims, [illegible] are in good standing:

Claim	Book	Page No.
Cindy # 1	48	590
Cindy # 2	48	591
Cindy # 3	[illegible]	592
Cindy # 4	[illegible]	593
Cindy # 5	[illegible]	594
Midnight Extension	48	596

The claims are on record in Jefferson County [illegible] Boulder, Montana. The locators of said claims are Gilbert C. [illegible] of Basin, Montana.

[illegible] prices.

[illegible] Miller
[illegible] Engineer
Western America of Montana

[illegible]

cc: Alcoa, Passaic, New Jersey
Alcoa, Vancouver, B. C.
Western America of Montana

Air Mail

DMEA

UNITED STATES
DEPARTMENT OF THE INTERIOR
DEFENSE MINERALS EXPLORATION ADMINISTRATION
So. 157 Howard Street
Spokane 4, Washington

OFFICIAL FILE COPY
DMEA
RECEIVED OCT 30 1957

DATE	INITIALS	CODE
10/30	gb	220
10/31	jba	500

October 24, 1957

Mr. George C. Selfridge, Chairman
Operating Committee, DMEA
Department of the Interior
Washington 25, D. C.

Re: Docket No. DMEA-4732 (Lead-Zinc-Copper)
Western America of Montana, Inc.
Morning Mine
Jefferson County, Montana

Dear Mr. Selfridge:

Enclosed are two copies of a bid from Boyles Bros. Drilling Company for the drilling proposed on the subject property, now under consideration for a DMEA contract.

We also acknowledge receipt of your letter of October 18, 1957 regarding the addition of five claims to the ground to be subordinated to the contract. We have written the applicant (two copies enclosed) asking him if he is agreeable to this addition and, if so, to give us the book and page on which location of these claims has been recorded. As the Cindy No. 2(book 48, page 591) is included in the application, and Cindy No. 4 is omitted from the list in your letter, we are asking the Operator to include Cindy No. 4.

We note in recent letters, both yours and ours, that the applicant has been referred to as Western American of Montana, Inc. Although it is so called in paragraph 1(a) in the narrative portion of the application, the application is signed Western America of Montana, Inc. and as this designation also is on the company letterhead we assume that paragraph 1(a) "American" is a typographical error.

Sincerely yours,

A. E. Weissenborn

A. E. Weissenborn
Executive Officer, DMEA
Field Team, Region I

Enclosures

cc: USBM (2)
Prinz

Official
[redacted] COPY
DMEA
RECEIVED OCT 30 1957

DATE	INITIALS	CODE

So. 157 Howard Street
Spokane 4, Washington

October 24, 1957

Mr. T. V. Leonard, President
Western America of Montana, Inc.
P. O. Box 782
Helena, Montana

Re: Docket No. DMEA-4732 (Lead-Zinc-copper)
Western America of Montana, Inc.
Morning Mine
Jefferson County, Montana

Dear Mr. Leonard:

Thank you for returning so promptly the Consent to Lien and Subordination Agreement and the Assignment of Lease which we requested in our letter of October 10, 1957.

We have been instructed by our Washington office to ask if you would be willing to add to the now limited land to be explored the following claims: Cindy No. 1, Cindy No. 2, Cindy No. 3, Cindy No. 5 and Midnight Extension. As you have already stated in your application that Cindy No. 2, recorded in book 48, page 591, should be included if crosscutting and drifting are accepted, it would do no harm to include Cindy No. 4.

If you are willing to add these claims, please so state and give the book and page on which each claim is recorded.

If you are unwilling to add Cindy Nos. 1, 2, 3, 4, and 5 and Midnight Extension, please advise us.

Sincerely yours,

A. E. Weissenborn
Executive Officer, DMEA
Field Team, Region I

cc: DMEA (2)
USBM (2)
Prinz

WESTERN AMERICA OF MONTANA

TELEPHONE HICKORY 2-2654

P. O. BOX 782

HELENA, MONTANA

OFFICE FILE COPY
DMEA
RECEIVED OCT 30 1957

DATE	INITIALS	CODE

[illegible]

[illegible] States Department of the Interior
[illegible] Minerals Exploration Administration
[illegible] Howard Street
[illegible] Washington

Subject: DMEA [illegible] (Lead-Zinc-Copper)
Re: Additional [illegible] (third),
[illegible] project,
[illegible] Jefferson
[illegible]

DMEA

Gentlemen:

Please find enclosed a bid from [illegible] Drilling [illegible] the proposed [illegible] Mine, Jefferson [illegible]. The additional [illegible] have [illegible] [illegible], but we were [illegible] hard [illegible] them as yet.

[illegible] submitting [illegible] will have [illegible] by the [illegible] of the [illegible] is estimated that [illegible] [illegible] which [illegible] of the [illegible] a minimum of [illegible] of drill hole, this amounts to [illegible] $[illegible]/foot.

Very truly yours,

Richard N. Miller

Richard N. Miller
[illegible] Engineer
Western America of Montana

DMEA Form 7
(12-56)

OFFICIAL FILE COPY

Date	Surname	Code
10/16	[illegible]	500
	[illegible]	500
10/18	[illegible]	130
"	[illegible]	110
"	[illegible]	100
		~~110~~
10/18	[illegible]	220
		500

500

OCT 18 1957

Mr. A. E. Weissenborn
Executive Officer
DMEA Field Team, Region I
South 157 Howard Street
Spokane 4, Washington

Re: Docket No. DMEA-4732 (Lead-Zinc-Copper)
Western American of Montana, Inc.
Morning Mine
Jefferson County, Montana

Dear Mr. Weissenborn:

This is to acknowledge your letter, dated October 11, 1957, regarding the cited project, in which you requested the Applicant to obtain an Assignment of the Lease to the above-mentioned company and requesting executed copies of Consent to Lien and Subordination Agreement. We also wish to thank you for the copies of the map and the diamond drill bids.

In the Field Team examination report, page 5, there are listed eight corporation located claims which were not included in the application. Before final consideration can be given to the application, it appears that the following claims should be added to the now limited land to be explored: Cindy No. 1, Cindy No. 2, Cindy No. 3, Cindy No. 5, and Midnight Extension. If this is agreeable to the Applicant, please furnish us with the book and page number of these claims.

We will hold this application in abeyance until we receive the requested information.

Sincerely yours,

George C. Selfridge
Chairman, Operating Committee (GCS)
JWAlt/er 10/16/57
Copy to: Docket
Admr R File
Op. Committee
Mr. Bishop, USBM
Mr. Kiilsgaard, USGS
Chron.

APPROVED:

Frank D. Lamb (GCS)
Member, Bureau of Mines

Thor H. Kiilsgaard (GCS)
Member, Geological Survey

8623

UNITED STATES
DEPARTMENT OF THE INTERIOR
DEFENSE MINERALS EXPLORATION ADMINISTRATION
So. 157 Howard Street
Spokane 4, Washington

OFFICIAL FILE COPY
DMEA
RECEIVED OCT 21 1957

DATE	INITIALS	CODE
10/21	GB	220
10/24 10/21	Jwa	500

October 17, 1957

Mr. George C. Selfridge, Chairman
Operating Committee, DMEA
Department of the Interior
Washington 25, D. C.

Re: Docket No. DMEA-4732 (Lead-Zinc-Copper)
Western America of Montana
Morning Mine
Jefferson County, Montana

Dear Mr. Selfridge:

In accordance with your letter of May 8, 1957, enclosed are two copies of Assignment of Mining Lease dated June 16, 1956 from Western America Uranium Exploration Corporation to Western America of Montana.

Also enclosed are the original and four copies of Consent to Lien and Subordination Agreement signed by Gil C. and Anne F. Holshue, and D. A. and Catherine DuBois.

Sincerely yours,

D R MacLaren
D. R. MacLaren
for: A. E. Weissenborn
Executive Officer, DMEA
Field Team, Region I

Enclosures

cc: USBM (2)
Sample

OFFICIAL FILE COPY
DMEA
RECEIVED OCT 24 1957

DATE	INITIALS	CODE
10/15	C	220
10/15	Qee	500

10/17

UNITED STATES
DEPARTMENT OF THE INTERIOR
BUREAU OF MINES
WASHINGTON 25, D. C.

October 14, 1957

Re: DMEA 4732; Pb-Zn-Cu;
Western American of Montana, Inc.
Morning Mine
Jefferson County, Mont.

Memorandum

To: W. R. Griswold, DMEA

From: O. M. Bishop, USBM

Subject: Review of field examiners report, dated 9/17/57 and field teams letter of 9/27/57 thereon

John A. Bowsher (USBM) and R. D. Sample (USGS) examined the property in company with the applicants Geologist, R. N. Miller. In summation they write that the Morning vein is an irregular quartz vein up to 5 feet thick occupying a shear zone in an easterly trending dike of acidic rock cutting the Boulder batholith. Pyrite is disseminated throughout the shear zone, and concentrations of pyrite, gold, silver, lead, copper and zinc are associated with the quartz both in the shear zone and in the altered zones of the wall rock. A crosscut adit cuts the main or Morning quartz vein at 75 feet below the outcrop and a drift follows the strike of the vein for 280 feet.

Sampling by the applicant shows the vein to average about 2.7 feet in width and to contain .06 oz. gold and 4.06 oz. silver. Roughly two-thirds of the samples were assayed for lead, half for zinc and one-third for copper. Such samples averaged 2, 1, and 0.5 percent lead, zinc and copper respectively. Two check samples taken by the examiners showed greater widths and greater gold, silver and copper values with lower lead and zinc values. Total shipments of ore have been about 240 tons; all from the oxidized zone.

The Crystal and Bullion mines located on an east-west shear zone quite similar to that at the Morning Mine, but somewhat to the south have produced about 50,000 tons of ore of somewhat better grade than that shipped from the Morning vein. The higher grade is attributed to secondary enrichment and it is predicated that below the oxidized portion of the Morning mine there should be a zone of secondary enrichment. Bulldozer cuts and other shallow exposure of the Morning Mine could not be seen because of snow.

The field team concluded that exposures developed are leached and that the vein is likely to be richer at depth because of secondary enrichment and no leaching.

The applicant has considered two possible programs but appears to favor a program consisting of surface diamond drilling to test the structure at depth followed by an adit-crosscut and development on the vein. This is somewhat similar to the program recommended by the field team. This latter consists of a 6-hole 2,100-foot drilling program at $20,040 as a first stage, followed by 1,150 feet of crosscutting and drifting on the 240 level at a cost of $45,165.

I consider the 2 stage program sound in concept and recommend it.

O. M. Bishop

O. M. Bishop

Copy to: Division of Minerals
Mr. Kiilsgaard
Mr. Lamb
Mr. Bishop
F I L E S

UNITED STATES
DEPARTMENT OF THE INTERIOR
DEFENSE MINERALS EXPLORATION ADMINISTRATION
So. 157 Howard Street
Spokane 4, Washington

10/15

OFFICIAL FILE COPY
DMEA
RECEIVED OCT 14 1957

DATE		CODE
10/15	C	220
10/15	Jwa	500

October 11, 1957

Mr. George C. Selfridge, Chairman
Operating Committee, DMEA
Department of the Interior
Washington 25, D. C.

Re: Docket No. DMEA-4732 (Lead-Zinc-Copper)
Western America of Montana, Inc.
Morning Mine
Jefferson County, Montana

Dear Mr. Selfridge:

Enclosed are two copies each of two bids received from Richard N. Miller, Geological Engineer for Western America of Montana, presented by Gustaf M. Carlson, Box 278, Helena, Montana and R. S. McClintock, Diamond Drill Company, W. 418 2d Avenue, Spokane, Washington. Mr. Miller also sent us copies of letters of inquiry he wrote to five prospective bidders, two copies each of which are enclosed. It is expected that other bids will be forthcoming and as soon as they are received they will be forwarded.

In accordance with instructions in your referral letter of May 8, 1957, we have written to Mr. Leonard, president of the company, requesting a consent to lien from Mr. and Mrs. Holshue and Mr. and Mrs. DuBois, and an Assignment of Lease from the Western America Uranium Exploration Corporation. Copies of our letter are enclosed.

Eight prints of plate II are enclosed to be attached to copies of a contract, if one is negotiated.

Sincerely yours,

D R MacLaren
D. R. MacLaren
Alternate Acting Exec. Officer
DMEA Field Team, Region I

Enclosures

cc: USBM (2)
Sample

So. 157 Howard Street
Spokane 4, Washington

October 11, 1957

Mr. George C. Selfridge, Chairman
Operating Committee, DMEA
Department of the Interior
Washington 25, D. C.

Re: Docket No. DMEA-4732 (Lead-Zinc-Copper)
Western America of Montana, Inc.
Morning Mine
Jefferson County, Montana

Dear Mr. Selfridge:

Enclosed are two copies each of two bids received from Richard N. Miller, Geological Engineer for Western America of Montana, presented by Gustaf M. Carlson, Box 278, Helena, Montana and R. S. McClintock, Diamond Drill Company, W. 418 2d Avenue, Spokane, Washington. Mr. Miller also sent us copies of letters of inquiry he wrote to five prospective bidders, two copies each of which are enclosed. It is expected that other bids will be forthcoming and as soon as they are received they will be forwarded.

In accordance with instructions in your referral letter of May 8, 1957, we have written to Mr. Leonard, president of the company, requesting a consent to lien from Mr. and Mrs. Holshue and Mr. and Mrs. DuBois, and an Assignment of Lease from the Western America Uranium Exploration Corporation. Copies of our letter are enclosed.

Eight prints of plate II are enclosed to be attached to copies of a contract, if one is negotiated.

Sincerely yours,

D. R. MacLaren
Alternate Acting Exec. Officer
DMEA Field Team, Region I

Enclosures

cc: USBM (2)
Sample

OFFICIAL FILE COPY
DMEA
RECEIVED OCT 1957

So. 157 Howard Street
Spokane 4, Washington

October 10, 1957

Mr. T. V. Leonard, President
Western American of Montana, Inc.
P. O. Box 782
Helena, Montana

Re: Docket No. DMEA-4732 (Lead-Zinc-Copper)
Morning Mine
Jefferson County, Montana

Dear Mr. Leonard:

Enclosed are seven copies of a Consent to Lien and Subordination Agreement which must be filled out and signed by all owners of the Morning and Midnite claims--Gil C. and Ann Holshue and D. A. and Catherine DuBois. All four individuals should sign all copies of the Consent form, the original and four copies to be returned to this office, the other two copies to be kept by each of the signing couples. Starting on line 3 after "as follows" the legal description will be "Morning claim, U. S. Patent Survey No. 8518 and Midnite claim, U. S. Patent Survey No. 8519."

As the Morning and Midnite claims are leased to Western America Uranium Exploration Corporation and the application is in the name of Western American of Montana, it will be necessary for Western American of Montana to furnish four copies, at least one showing signatures, of an assignment of lease from Western America Uranium Exploration Corporation.

As soon as we receive the Consent to Lien and Subordination Agreement and the assignment of lease properly executed, we will continue processing your application.

By Field Team, Region I

D. R. MacLaren, Alternate
Acting Executive Officer
U. S. Geological Survey

S. W. Zoldok, Acting Member
U. S. Bureau of Mines

Enclosures

cc: DMEA (2)
USBM (2)
Sample

So. 157 Howard Street
Spokane 4, Washington

October 10, 1957

Mr. T. V. Leonard, President
Western American of Montana, Inc.
P. O. Box 782
Helena, Montana

Re: Docket No. DMEA-4732 (Lead-Zinc-Copper)
Morning Mine
Jefferson County, Montana

Dear Mr. Leonard:

Enclosed are seven copies of a Consent to Lien and Subordination Agreement which must be filled out and signed by all owners of the Morning and Midnite claims--Gil C. and Ann Holshue and D. A. and Catherine DuBois. All four individuals should sign all copies of the Consent form, the original and four copies to be returned to this office, the other two copies to be kept by each of the signing couples. Starting on line 3 after "as follows" the legal description will be "Morning claim, U. S. Patent Survey No. 8518 and Midnite claim, U. S. Patent Survey No. 8519."

As the Morning and Midnite claims are leased to Western America Uranium Exploration Corporation and the application is in the name of Western American of Montana, it will be necessary for Western American of Montana to furnish four copies, at least one showing signatures, of an assignment of lease from Western America Uranium Exploration Corporation.

As soon as we receive the Consent to Lien and Subordination Agreement and the assignment of lease properly executed, we will continue processing your application.

By Field Team, Region I

D. R. MacLaren, Alternate
Acting Executive Officer
U. S. Geological Survey

S. W. Zeldok, Acting Member
U. S. Bureau of Mines

Enclosures

cc: DMEA (2)
USBM (2)
Sample

September 27, 1957

Mr. John J. Cloeter
c/o Butte Machinery Co.
510 E. Aluminum Street
Butte, Montana

Dear Mr. Cloeter:

We are in the process of planning a diamond drilling project for testing one of our properties at depth. The proposed program will be accomplished with the assistance of a DMEA loan if final approval comes from Washington, D. C. The project as outlined, has already been given approval by the United States DMEA office in Spokane, Washington. They require that three bids be solicited on any government sponsored drilling job. Please accept this letter as a formal request for a bid from your concern.

The enclosed summarization report, maps, and cross-sections, will indicate to you the location of the property, the scope of the project as now planned, and will testify somewhat to a number of specific problems related to testing the property at depth by diamond drilling. It is probable that you will desire to send a man to the property for a first hand observation of the situation. If such should be the case, please do not hesitate to call on me as I would be happy to take a representative from your company over the property.

Even though we do not know at this date if you are interested in bidding the drilling job, it would be greatly appreciated if any eventual bid by your concern would include the following detailed costs.

(1) Cost of moving drilling unit or units on to property, and away from property at termination of project.
(2) Cost of moving from drilling site to drilling site.
(3) Cost/foot of drilling out to bedrock, and of landing surface pipe.
(4) Cost/foot for the different sizes of core that need be cut, from NX down through nothing smaller than AX.
(5) Cost/foot for reaming hole, and for landing strings of casing other than surface pipe.
(6) Cost of individual cementing jobs.
(7) Cost/foot of casing, etc., if not recoverable from hole.
(8) Cost of downtime, if caused by either operator of property or by government.

Should you require further information on any of the various aspects of the proposed project, and, again, if you should desire to investigate the situation first hand, please do not hesitate to call on me.

Sincerely yours,

Richard N. Miller

Richard N. Miller
Geological Engineer
Western America of Montana, Inc.

COPY

October 7, 1957

Mr. O. C. Bouquot
c/o Boyle's Brothers
11403 E. 12th Avenue
Spokane, Washington

Dear Mr. Bouquot:

It has been our good fortune to be able to take Mr. Roy Beardslee of your company over our Morning-Midnight property, and to have him examine the situation relative to testing the property at depth by diamond drilling. The project, as now planned, was originally outlined by the DMEA office in Spokane, Washington. As yet, the project has not been given final approval by their offices in Washington, D. C. However, they require that three bids be solicited even before final approval has been given; thus please accept this letter as a formal request for a bid from your company.

The enclosed property location map, along with a summarization report, surface map, and cross-sections now in the hands of Mr. Beardslee and which are being forwarded to you, will indicate the location of the property, the scope of the project as now planned, and will testify somewhat to a number of specific problems related to testing the property at depth by diamond drilling.

It would be greatly appreciated if any eventual bid by your concern would include the following detailed costs (based on utilization of your new D-Series core barrel and on the techniquie of drilling casing down close behind the barrel.)

(1) Cost of moving drilling unit or units to property, and away from property at termination of project.
(2) Cost of moving from drilling site to drilling site.
(3) Cost/foot of drilling out to bedrock, and of landing surface pipe.
(4) Cost/foot for the different sizes of core that need be cut, from NX down through nothing smaller than AX.
(5) Cost/foot for reaming hole, and for landing strings of casing other than surface pipe.
(6) Cost of individual cementing jobs.
(7) Cost/foot of casing if not recoverable from hole.
(8) Cost of downtime, if caused by either operator of property or by government.

Should you desire further information on any aspect of the proposed project, please do not hesitate to call on me.

Very truly yours,

Richard N. Miller

Richard N. Miller
Geological Engineer
Western America of Montana

cc: Alscope, Passaic, New Jersey
Alscope, Vancouver, B. C.
Western America of Montana

October 7, 1957

Mr. O. C. Bouquot
c/o Boyle's Brothers
11403 E. 12th Avenue
Spokane, Washington

Dear Mr. Bouquot:

It has been our good fortune to be able to take Mr. Roy Beardslee of your company over our Morning-Midnight property, and to have him examine the situation relative to testing the property at depth by diamond drilling. The project, as now planned, was originally outlined by the DMEA office in Spokane, Washington. As yet, the project has not been given final approval by their offices in Washington, D. C. However, they require that three bids be solicited even before final approval has been given; thus please accept this letter as a formal request for a bid from your company.

The enclosed property location map, along with a summarization report, surface map, and cross-sections now in the hands of Mr. Beardslee and which are being forwarded to you, will indicate the location of the property, the scope of the project as now planned, and will testify somewhat to a number of specific problems related to testing the property at depth by diamond drilling.

It would be greatly appreciated if any eventual bid by your concern would include the following detailed costs (based on utilization of your new D-Series core barrel and on the techniquie of drilling casing down close behind the barrel.)

(1) Cost of moving drilling unit or units to property, and away from property at termination of project.
(2) Cost of moving from drilling site to drilling site.
(3) Cost/foot of drilling out to bedrock, and of landing surface pipe.
(4) Cost/foot for the different sizes of core that need be cut, from NX down through nothing smaller than AX.
(5) Cost/foot for reaming hole, and for landing strings of casing other than surface pipe.
(6) Cost of individual cementing jobs.
(7) Cost/foot of casing if not recoverable from hole.
(8) Cost of downtime, if caused by either operator of property or by government.

Should you desire further information on any aspect of the proposed project, please do not hesitate to call on me.

Very truly yours,

Richard N. Miller

Richard N. Miller
Geological Engineer
Western America of Montana

cc: Alscope, Passaic, New Jersey
Alscope, Vancouver, B. C.
Western America of Montana

R. S. McClintock Company
West 416-413 Second Avenue
Spokane, Washington

September 20, 1957

Dear Sir:

We are in the process of planning a diamond drilling project for testing one of our properties at depth. The proposed program will be accomplished with the assistance of a DMEA loan, if final approval comes from Washington, D. C. The project as outlined, has already been approved by the United States Bureau of Mines and by the United States DMEA offices in Spokane, Washington. They require that three bids be obtained on any government sponsored drilling job.

The enclosed summarization report, maps, and cross-sections, will indicate to you the location of the property, the scope of the project as now planned, and will testify somewhat to a number of specific problems related to testing the property at depth by diamond drilling. It is probable that you will desire to send a man to the property for a first hand observation of the situation. If such should be the case, please do not hesitate to call on me as I would be happy to take a representative from your company over the property.

Even though we do not know at this date if you are interested in bidding the drilling job, it would be greatly appreciated if any eventual bid by your concern would include the following detailed costs.

(1) cost of moving drilling unit or units onto property, and away from property at termination of the project.
(2) cost of moving from drilling site to drilling site.
(3) cost/foot of drilling out to bedrock, and of landing and cementing surface casing.
(4) cost/foot for the different sizes of core that need be cut, from NX down through nothing smaller than AX.
(5) cost/foot for reaming hole, and for landing and cementing strings of casing other than surface pipe.
(6) cost of downtime, if caused by either operator or government.

Should you require further information on any of the various aspects of the proposed project, and, again, if you should desire to investigate the situation first hand, please do not hesitate to call on me.

Sincerely yours,

Richard N. Miller

Richard N. Miller
Geological Engineer
Western America of Montana, Inc.

cc:

Mr. Gustaf M. Carlson
11 E. Cutler
Helena, Montana

September 11, 1957
Helena, Montana

Dear Mr. Carlson:

In light of your recent investigation of a portion of the Morning-Midnight shear zone, of our recent discussion of the proposed diamond drilling project, and of the ultimate goal and expected results, we would hereby like to make a formal request for a bid from your concern on the holes (5 to 7) and footage (2,100' min.) recently approved by the United States DMEA field team and United States Bureau of Mines in Spokane, Washington. It should be understood, that as yet the project has not been given final approval by their head offices in Washington, D. C.

Further, in view of the techniques that you know and think will be required for the successful completion of this particular project, it would be greatly appreciated if your bid would include the following detailed costs:

(1) moving of drilling unit, or units onto property, and away from property at termination of project

(2) cost/foot of drilling-out to bedrock, and of landing and cementing surface casing

(3) cost/foot for different sizes of core that need be cut, from NX down through nothing smaller than AX

(4) cost/foot for reaming hole, and for landing and cementing strings of casing other than surface pipe

(5) cost of downtime, if caused by operator or government

Should you require further information on any of the various aspects of the proposed project, or should you again need to investigate portions of the property first hand, please do not hesitate to call on me.

Sincerely yours,

Richard N. Miller

Richard N. Miller
Geological Engineer
Western America of Montana

cc

UNITED STATES
DEPARTMENT OF THE INTERIOR
DEFENSE MINERALS EXPLORATION ADMINISTRATION
So. 157 Howard Street
Spokane 4, Washington

OFFICIAL FILE COPY
DMEA
RECEIVED OCT 14 1957

DATE		CODE
10/14	C	220
10/14	Jwa	500

October 9, 1957

Mr. George C. Selfridge, Chairman
Operating Committee, DMEA
Department of the Interior
Washington 25, D. C.

Re: Docket No. DMEA-4276 (Copper)
Uranium Corporation of America
Dailey Copper Mine
Jefferson County, Montana

Dear Mr. Selfridge:

Attached are three copies of a letter dated October 5, 1957, from Mr. S. J. Giulio, together with three copies each of bids received from the Joy Manufacturing Company, Michigan City, Indiana, and R. S. McClintock Company, Spokane, Washington (unsigned). We had indicated in our letter of August 6, 1957, that if additional bids were received we would send them on to you.

Sincerely yours,

A. E. Weissenborn
Executive Officer, DMEA
Field Team, Region I

Enclosures

cc: USBM (2)
Sample

REFER TO	ACTION	NOTED	DATE
[illegible]		[illegible]	[illegible]
[illegible]			
451 [illegible]			
DMEA			
ANSWERED			

838 Sixth Avenue
Helena, Montana
October 5th., 1957

United States Department of the Interior
Defense Minerals Exploration Administration
127 South Howard Street
Spokane 4, Washington

Re: Docket [illegible]

Gentlemen:

In accordance with your request and suggestion of some time ago, we submit herewith for your information and records, diamond drilling quotations from the following drillers:

Joy Manufacturing Co., Michigan City, Indiana
R. S. McClintock Co., Spokane, Washington

Please note that the R. S. McClintock Company is rather specific regarding several detail items, including the transportation of drilling equipment. The Joy Manufacturing Company quotation, on the other hand, is rather general in character.

Very truly yours,
[illegible] CORPORATION OF AMERICA

By S. J. Giulio

OFFICIAL FILE COPY
DMEA
RECEIVED OCT 14 1957

DATE	INITIALS	CODE

RECEIVED
OCT 7 1957

ORIGINAL FILE COPY
DMEA
OCT 14 1957

Sept. 30, 1957

[illegible]
630 - 6th Avenue
Helena, Montana

Attention: Mr. [illegible]

Dear Mr. Gaddis:

We wish to furnish our quotation for diamond drilling your Bajley Mine property near Wisdom, Montana.

It is understood that there will be 3,000' to 5,000' of underground drilling. Adequate water and air will be furnished to drill machine by your Company and you will make room for a minimum 10' and pull on holes to 200' and a minimum 20' and pull on holes over 200' in depth.

We propose to furnish hole, diamond core drill, drill pump, rods, casing, core barrels, diamond core bits and shells and all the necessary accessories except core boxes and sample bags, for the following prices per foot:

0	200'	AX Size	4.95 per foot
200	300'	AX Size	5.45 per foot
0	200'	BX Size	4.85 per foot
200	300'	BX Size	5.35 per foot

In the event loose and caving material, water courses, or any conditions are encountered which in the contractors opinion tend to make drilling impractical without the use of casing or cement, a charge of .30c per foot will be made for setting casing, $4.00 per foot for reaming, $4.00 per foot for placing and drilling cement.

In the event of delays not attributable to contractor or break-down of his equipment, contractor shall expect to be reimbursed for his continuing costs at the rate of $8.00 (eight) per hour.

Contractor agrees to mobilize and demobilize equipment from and to Spokane for the lump sum of $900.00 (nine-hundred dollars).

In the event of negotiated wage increases during the life of the contract, Contractor would expect to be reimbursed for his increased costs.

Page 2

[illegible] CORPORATION OF AMERICA

As is customary in the industry, we would expect to enter into an escrow agreement which will secure [illegible] of sufficient funds to meet invoices after your Company's approval.

Our employees will be covered by Workmens Compensation to comply with the Montana Taxes Act and the Job will be covered by Public Liability Insurance in the amount of $[illegible].00 and $[illegible].00 and property damage in the amount of $[illegible].00.

We wish to thank you for the opportunity of furnishing our quotation.

Yours very truly,

[illegible] Company

[illegible]

[illegible]
Building Dept.

[illegible]

UNITED STATES
DEPARTMENT OF THE INTERIOR
GEOLOGICAL SURVEY
WASHINGTON 25, D. C.

OFFICIAL FILE COPY
IN REPLY REFER TO:
DMEA
RECEIVED OCT 2 1957

DATE	INITIALS	CODE
10/2	B	220
10/3	Jwa	500

10/8/57

October 2, 1957

Memorandum

To: W. R. Griswold, Defense Minerals Exploration Administration

From: W. P. Williams, U. S. Geological Survey

Subject: Review of field examination report, DMEA 4732 (lead-zinc-copper), Western American of Montana, Inc., Morning Mine, Jefferson County, Montana

The examining team report that geologic conditions on the applicant's property appear favorable for the presence of undiscovered ore reserves. Ore on the claims is found in a thick quartz vein and also disseminated in altered country rocks.

The mine has never been developed below the oxidized zone. From the extensive leaching the examiners conclude that minable deposits of ore grade exist at depth in the primary zone. The vein structure can be traced for miles on surface and appears to become stronger with depth. The mine is located in an area where other more extensively explored mines have produced large amounts of ore.

I share the opinion of the examining team that more exploration is warranted on the property. I recommend approval of a DMEA contract to provide for an exploration project of diamond drilling, crosscutting, and drifting as outlined in the field examiners' report.

W. P. Williams

W. P. Williams

JOY MANUFACTURING COMPANY

MICHIGAN CITY, INDIANA

HENRY W. OLIVER BLDG.
PITTSBURGH 22, PA.

September 24, 1957

Uranium Corporation of America
Wicks, Montana

Gentlemen:

Thank you for asking us to quote on your proposed drilling at Wicks, Montana. Based on the information given us, there will be a minimum guarantee of 3,000 feet of drilling. This work will be performed with AX size fittings. The maximum depth hole will be 500 feet, and the minimum depth will be 200 feet. We will expect you to supply water and an ample amount of air at the location of each drill hole. Clearance should be cut at each drill site to allow for 10 ft. pulls of the drill rods.

Our price for a minimum of 3,000 feet of drilling, based on the above conditions will be $4.95 per foot. In the event we have to resort to reaming, casing or cementing in the drill holes, such work will be performed at the rate of $[illegible].00 per hour plus materials used up. Delays will be chargeable at the rate of $10.00 per hour. If you find our prices acceptable, you may notify us. We will have a formal core drilling agreement drawn up for you.

Yours very truly,

JOY MANUFACTURING COMPANY

/s/ J. M. MURRAY

J. M. Murray, Asst. Mgr.
Concrete Drill Division

JMM/[illegible]

OFFICIAL FILE COPY
DNMEEA
RECEIVED OCT 14 1957

DATE	INITIALS	CODE

OFFICIAL FILE COPY
DMEA
RECEIVED SEP 30 1957

DATE	INITIALS	CODE
9/30	C	220
	ay	130
10/2		220
10/2	Jwa	500

UNITED STATES
DEPARTMENT OF THE INTERIOR
DEFENSE MINERALS EXPLORATION ADMINISTRATION
So. 157 Howard Street
Spokane 4, Washington

September 27, 1957

Mr. George C. Selfridge, Chairman
Operating Committee, DMEA
Department of the Interior
Washington 25, D. C.

Re: Docket No. DMEA-4732 (Lead-Zinc-Copper)
Western American of Montana, Inc.
Morning Mine
Jefferson County, Montana

Dear Mr. Selfridge:

Enclosed are three copies of a memorandum examination report by R. D. Sample, Geologist, U. S. Geological Survey and J. A. Bowsher, Mining Engineer, U. S. Bureau of Mines, on the subject property.

The Morning mine has been worked sporadically since prior to 1900 and has produced only a few hundred tons of ore from the 75 level and above. A quartz vein in quartz monzonite of the Boulder Batholith contains lead, zinc, and copper sulfides and low values in silver and gold. Based on 76 assays for gold and silver, 51 assays for lead, 38 assays for zinc, and 18 assays for copper, of samples taken by the applicant on the 75 level, the average grade of the vein over a length of 280 feet and a width of 2.6 feet is 0.06 ounce gold and 4.06 ounces silver per ton, 2 percent lead, 1.05 percent zinc, and 0.5 percent copper. The 75 level is in the zone of oxidation.

Within a mile of the Morning mine, the Crystal mine has produced between 21,000 and 22,000 tons of ore having an average grade of 0.17 ounce gold and 15.73 ounces silver per ton, 0.45 percent lead, 4.74 percent zinc, and 1.40 percent copper.

Sample and Bowsher conclude that deeper exploration on the Morning vein is justified and recommend a two-stage program, Stage I comprising 2,100 feet of diamond drilling from the surface and Stage II comprising 1,150 feet of crosscutting and drifting and 500 feet of long hole drilling at a total estimated cost of $65,205.

Reviewed by
DMEA OPERATING COMMITTEE
10/2/57
(Date)

Also enclosed are three copies of a memorandum by Sample, including assay returns, describing additional work that the Operator has done on the 75 level since the examination was made, and showing a slight increase in the values in the vein.

The Field Team concurs with the conclusions and recommendations of the examiners.

By Field Team, Region I

A. E. Weissenborn

A. E. Weissenborn, Exec. Officer
U. S. Geological Survey

for Stephen A. Zdeb

Thomas E. Howard, Acting Member
U. S. Bureau of Mines

Enclosures

cc: USBM (2)
USGS (SRO)
Sample

OFFICIAL FILE COPY
DMEA
RECEIVED SEP 30 1957

DATE	INITIALS	CODE

UNITED STATES
DEPARTMENT OF THE INTERIOR
Defense Minerals Exploration Administration
So. 157 Howard Street
Spokane 4, Washington

September 17, 1957

MEMORANDUM

To: DMEA Field Team, Region I

From: R. D. Sample, Geologist, U. S. Geological Survey, and J. A. Bowsher, Mining Engineer, U. S. Bureau of Mines

Subject: Examination Report, Docket No. DMEA-4732 (Lead-Zinc-Copper), Western American of Montana, Inc., Morning Mine, Jefferson County, Montana.

INTRODUCTION

In an application, dated and received April 18, 1957, Western American of Montana, Inc., applied for Government aid to explore the Morning mine, Jefferson County, Montana, for lead, zinc, and copper minerals. The applicant proposed two separate programs to explore the Morning vein at depth. One program would sink on the Morning vein from the 75 level to two lower levels with attendant drifting and long holing at an estimated total cost of $89,346.82. The other program would crosscut from the surface to the lowest level with attendant raising, drifting, and long holing at an estimated total cost of $81,480.71. When the application was submitted, the applicant expressed a preference for the sinking project, but after further exploration of the mine now believes a modified form of the crosscutting program would be the most satisfactory because of the water problem. In either proposal the Government's participation would be 50 percent.

A former application for Government aid on the same property was submitted by Gilbert C. Holshue and Douglas A. Dubois on October 20, 1952 (Docket No. DMEA-2767). An alternate exploration program from the one proposed by the applicant was recommended by the examining team in a letter to the Field Team, dated March 26, 1953, but the application was denied in a letter, dated April 27, 1953, from the Administrator to the applicant which states in part: "* * * Although the area you propose to explore shows some mineralization, the discovery of a significant deposit of lead-zinc ore is too improbable to justify the expenditure of public funds."

Reviewed by
DMEA OPERATING COMMITTEE
10/2/57
(date)

On June 16, 1936, the property was leased to the Western American Exploration Corporation which has since done considerable rehabilitation and exploration comprising: (1) partial rehabilitation of the 340 feet of crosscut and drift on the 75 level (pl. III), (2) driving over 200 feet of new drift, and taking 80 samples on the 75 level (overlay for pl. III), and (3) bulldozing 6 trenches (pls. II and IVB) for a total of 270 feet, and taking 41 samples across the structure on the surface.

In view of the additional work and sampling by the Western American of Montana, a re-examination of the property was justified. An attempt was made to examine the mine on April 27, 1937, but the snow pack was too deep and the bulldozer had not yet cleared the road.

On the second attempt on May 1, 1937, the mine was examined by John A. Bowsher, Mining Engineer, Bureau of Mines, and R. D. Sample, Geologist, Geological Survey, accompanied by Richard N. Miller, geologist for the company. Mr. Miller guided the examiners through the 75 level and showed them the pertinent underground features. The surface could not be examined because of the heavy snow covering. The underground geology of the 75 level was mapped; however, because the drift back was either tightly lagged or too high, only two samples were taken (overlay for pl. III). Mr. Miller pointed out the position of the surface trenches, but these could not be examined because of the snow pack.

SUMMARY

The property, known as the Morning-Midnight mine, is in Jefferson County, Montana, and consists of two patented claims held by lease, and eight unpatented lode claims held under location by the applicant (pl. II).

The application was prepared by a professional engineer and geologist and was accompanied by a well-documented report.

Mining on the Morning vein has been sporadic since its discovery before 1900, and it is believed to have produced only a few hundred tons of ore valued for lead and silver content; however, it is flanked to the south and west by the Crystal mine and Bullion mine which have a combined production of about 51,500 tons of ore containing a total of 6,930 ounces gold, 588,300 ounces silver, 2,196,000 pounds lead, 2,040,000 pounds zinc, and 1,200,000 pounds copper.

Development work on the Morning vein consists of three adits, two of which crosscut to the vein at different elevations (pl. V), two vertical shafts, now caved and inaccessible, an inclined shaft on the vein above the uppermost adit, several prospect pits, and extensive bulldozer trenches across the strike of the vein (pl. II).

The intermediate or 75 level, the only adit accessible at the time of the examination, crosscuts about 250 feet to intersect the vein. From the crosscut a drift extends eastward along the vein for about 180 feet. All underground workings are within the oxidized zone in which there has been much shattering and intense chemical alteration. The wall rocks are quartz monzonite and aplite dikes in places so heavily covered with stains and crusts of limonite that identification of the rocks is difficult.

Ore on the Morning vein occurs in a heavy quartz-filled vein and, in places, is also disseminated in the altered country rocks. The quartz vein varies in thickness from a few inches to as much as 15 feet. The mineralization consists of sulfides of copper, lead, zinc, and iron, with good values of silver and traces of gold. Assays of samples taken by the applicant on the 75 level indicate a weighted average grade of 0.5 percent copper, 2 percent lead, 1.03 percent zinc, 4.06 ounces per ton silver, and 0.06 ounce per ton gold. Evidence of leaching at this shallow depth suggests that the material may well be of ore grade in the primary zone.

Dist 4 8 gone?

The applicant proposes two programs for exploration. His sinking program consists of 210 feet of vinze sinking on the vein from the 75 level to the 175 and 275 levels, followed by station preparation, drifting 400 feet, long holing 500 feet, crosscutting 200 feet, and timbering on each of the lower levels. The estimated cost of this program is $89,346.82.

An alternate program proposes to crosscut 820 feet from a lower elevation to intersect the Morning vein at the 275 level, followed by raising to the 175 level, then drifting, crosscutting, diamond drilling, and long holing, as outlined in the sinking plan. The estimated cost of this alternate plan would be $81,480.71. In both plans the Government's participation would be 50 percent.

The applicant when first submitting the two programs preferred the sinking on the vein plan, but upon further work on the vein realized there may be a water problem and now favors a modified form of the crosscut plan preceded by a drilling program.

CONCLUSIONS

The Morning mine is located in a well-established mineralized area of the Butte mining district of Montana from which there have been sizable amounts of base metals and silver produced in the past. Although the Morning mine itself does not have a record of much production, it has not been as extensively explored as some of the mines in the immediate area. Some of the present workings explore below the oxidized zone where there has been much leaching and alteration. The structure is strong on the 75 level and appears to be getting stronger with downward extensions. The

lateral extent is not known but is strong to the east at the end of the east drift. Bulldozing on the surface indicates that the Morning vein does have considerable strength laterally. Regional mapping on the surface by Edward T. Ruppel, Geologist, Geological Survey, shows that the Morning structure is strong and can be traced intermittently for several miles. It is logical to expect a structure with strong lateral extent to extend to a considerable depth. Indications are strong on the 75 level that there has been much leaching of the oxidized zone and that the secondary enriched ore of the primary zones can be expected to contain bodies of ore-grade material similar to those mined elsewhere in the district. Available assays of the minerals from the surface to the 75 level indicate that the mineralization is stronger on the 75 level than it is in surface trenches. It is therefore believed that an exploration program which will explore below the oxidized zone on the Morning structure is justified and warrants favorable consideration.

RECOMMENDATIONS

As the engineer-geologist's report accompanying the application points out, there are certain objectionable features that affect each of the proposals presented in the application. Winzing on the vein would be subject to a water problem that could well make the cost prohibitive. The cost of crosscutting 830 feet would be excessive if the mineral content of the vein were found to be no better on the 275 level than it is on the 75 level. The examiners therefore propose a modified program which is acceptable to company representatives.

It is recommended that 6 diamond drill holes, located approximately as shown on plate V, be drilled to test the vein at 100-foot intervals on or near the 245 level. It is estimated that this would require 2,100 feet of drilling. At the suggestion of the applicant's representative these holes would be started with NX size bits, and if necessary as drilling progresses the bit size may be reduced to EX or AX. No drilling should be done with bits smaller than AX.

It is further recommended that, if the results of the drilling are favorable, 1,150 feet of crosscut and drift be driven to explore the vein on the approximate 245 level. It is estimated that 750 feet of crosscut and 400 feet of drift will be required. Provision should also be made for 500 feet of long holing.

Inasmuch as the 830-foot crosscut on the 275 level proposed by the applicant to intersect the Morning vein would extend the portal beyond the north side line of the applicant's Cindy No. 2 claim (pl. II), the examiners recommend that the crosscut be started approximately 30 feet higher, or on the 245 level, which

would permit the portal to be approximately 50 feet southerly from the north side line of the Cindy No. 2 claim, and therefore entirely on the applicant's property. This location will shorten the crosscut by about 100 feet, resulting in approximately 750 feet of crosscut to reach the projected Morning vein at the 245 level. Due to the relation of the topography to the strike of the vein a shorter crosscut is impracticable.

LOCATION AND ACCESSIBILITY

The applicant's claims at an altitude of about 8,300 feet above sea level are in the northeastern portion of sec. 18 and the northwestern part of sec. 17, T. 7 N., R. 5 W. M.P.M., Jefferson County, Montana. The mine workings are about 7 air-line miles or about 10 or more miles by road northward from Basin, Montana. The property may be reached from Basin, which is located on the Great Northern Railroad and is the nearest shipping center, by traveling northeasterly over a gravel road up Cataract Creek about 5 miles to the junction of Uncle Sam Gulch and Cataract Creek, thence up Uncle Sam Gulch over a rough dirt road about 5 miles to the mine buildings. The Uncle Sam Gulch road is passable only by jeep except during the dry season. Heavy snows during the winter months would greatly impede year around mining operations. Rainfall during the summer consists of occasional showers.

PROPERTY RIGHTS

The Western American of Montana, Inc., controls two patented lode claims (Morning, U. S. Survey No. 8318, and Midnight, U. S. Survey No. 8319) by lease, dated June 16, 1956, from Gilbert C. Holshue and wife, and Douglas A. Dubois and wife. These claims were both surveyed for patent in July 1907. The lease called for a lump sum payment of $5,000 before September 1, 1956, and a 12½ percent royalty on production thereafter.

In addition, the corporation located, by right of discovery, eight protective claims (pl. II) surrounding the Morning and Midnight claims as follows:

Cindy No. 1	Cindy No. 4
Cindy No. 2	Cindy No. 5
Cindy No. 3	Cindy No. 6
Midnight Extension	Morning Extension

The location certificates are recorded in the Jefferson County Clerk's office in Boulder, Montana.

DESCRIPTION OF PROPERTY

The applicant's claims (2 patented, 8 unpatented) are all contiguous and lie in a general east-west block (pl. II) on the northern flank of a rounded mountain top which has an altitude of 8,395 feet. Mine workings are at about 8,000 feet altitude and consist of 3 adits at different elevations--the 40 level or Catherine adit (pl. IVA) which extends southward for about 100 feet to intersect the Morning vein, the 75 level or main level (pl. III) crosscuts southward for about 200 feet to intersect the vein, and the lower short adit which is caved but probably did not extend far enough to intersect the vein. In addition, there are several prospect pits and bulldozer trenches across the mineralized shear zone. A log building is used for living quarters and office, and a galvanized iron-covered building is used for a compressor house. Bulldozer roads connect the various workings. The general area is covered with pine and spruce trees suitable for mine timbers.

HISTORY AND PAST OPERATION

The Morning mine probably was discovered before the year 1900, as were most of the mines in the surrounding area. It has been rehabilitated and worked sporadically since its discovery, but the total production is unknown. During the years 1942-49 Frank Soll, a lessor, shipped 94.5 tons of ore containing gold, silver, and lead to the American Smelting and Refining Co., East Helena, Montana. This shipment is reported to have had a gross value of $45.70 per ton. During the years 1952-56 Holshue and Dubois, owners, shipped approximately 109 tons to the ASARCO smelter with a reported gross value of $27.40 per ton. A settlement sheet, dated September 22, 1952, for 9 tons of ore shows the ore contained 0.25 ounce gold per ton, 14.3 ounces silver per ton, 6.7 percent lead, and 0.10 percent copper. Another settlement sheet from the Metals Milling Co., Inc., a custom mill in Basin, Montana, dated October 12, 1952, was for a shipment of about 28.5 tons of ore which contained 0.17 ounce gold per ton, 8.85 ounces silver per ton, 3.6 percent lead, and 5.6 percent zinc.

APPLICANT

The applicant, Western American of Montana, Inc. (formerly Western America Uranium Exploration Corporation) is a subsidiary of Alscope Explorations, Ltd., of Alberta, Canada. It was incorporated in the State of Montana with the main office in Helena, Montana. The officers of the company are as follows:

President	T. V. Leonard, Helena, Montana
Vice-President	J. L. Wilson, Edmonton, Alberta
Secretary-Treasurer	E. K. Cheadle, Billings, Montana

The company was organized to conduct mining and exploration in Montana and other western states. It employs capable supervisory and technical personnel and has completed a Government contract (Docket No. DMEA-3503, White Pine mine, Jefferson County, Montana, Contract No. Idm-E799). It is well-prepared to meet its share of the cost of the proposed exploration by cash and equipment.

GEOLOGY

The applicant's property lies in a high mountainous area between Butte and Helena, Montana. It is underlain principally by igneous rocks of the Boulder batholith, a large intrusive igneous body of late Cretaceous age which is composed chiefly of quartz monzonite and related rocks. The batholithic rocks represent several stages of igneous intrusion. One of the late stages is characterized by many irregular dikes, sills, and other bodies of aplite and alaskite. The dikes usually strike easterly or slightly north or south of east and are usually greatly sheared, faulted, or broken into wide and intensely altered zones containing varying amounts of gold, silver, lead, zinc, copper, and minor minerals. Massive quartz veins and stringers are common. The Morning mine is located on one of these east-west zones, and according to Edward T. Ruppel, who has done extensive work on the Boulder batholith, the Morning zone and quartz veins can be traced intermittently easterly and westerly from the mine for several miles. This would indicate a strong zone laterally and also a strong zone vertically. The Morning mine is exploring a strong, mineralized quartz vein within this zone. Ruppel states in an unpublished paper as follows:

> "The fault zone containing the quartz vein trends N. 65°-75° W., dips about 70° N. and ranges from 10 to 30 feet in thickness. The fault places fine-grained, light-gray quartz monzonite in contact with a wide zone of altered coarse and medium grained quartz monzonite. The vein has been repeatedly brecciated and resealed. Massive and irregular quartz veins in the fault zone are as much as 5 feet thick, and much of the breccia in the fault zone is cemented with quartz. The quartz appears to be of two ages. Metallic sulfides are pyrite that is disseminated through the entire fault zone and also occurs in small masses in the vein. * * * Much of the ore from the mine has come from the secondarily enriched zone, and cerussite has been the principal lead mineral. Sphalerite and secondary zinc minerals are almost completely absent in the near surface parts of the mine. Assays and smelter returns on about 160 tons of ore shipped from the mine since 1949 suggest some secondary enrichment, especially in silver but also in lead. The average metal content of secondary ore was 0.3 ounce gold and 8-10 ounces silver per ton, and 2-6 percent lead. The average metal content of primary ore was 0.2 ounce gold and 1-4 ounces silver per ton, and 1-2 percent lead and a lower percentage of zinc."

As all the present workings are in the zone of oxidation, it is probable that what Ruppel calls primary ore was somewhat impoverished by leaching although some primary minerals remained.

Mineralization

Disseminated pyrite and other sulfide minerals are found sparsely throughout the altered shear zone and in the quartz monzonite wall rocks; however, the principal gold, silver, lead, zinc, and copper minerals are associated with or are in the quartz veins of the altered zone. The main or Morning quartz vein is intersected by a crosscut on the 75 level about 200 feet from the portal. At the point of intersection the quartz vein is about 15 feet thick although it is somewhat broken and divided by an aplite dike (pl. III). This massive quartz vein can be seen at intervals through the tight lagging. It has been followed easterly for about 280 feet along the strike until it passes into the hanging wall of the shear zone a short distance from the breast of the drift. The vein dips from 60°-75° N. and is closely associated with the aplite dike found at the main crosscut. Both the quartz vein and aplite dike are so broken, altered, and stained with limonite that in places it is hard to distinguish one from the other, but sparse to good mineralization of iron, lead, and zinc sulfides can be seen throughout the entire length, and it appears to be increasing in size as the depth increases. The company has sampled and assayed the Morning vein on the 75 level (overlay for pl. III). Two check samples were taken by the examiners. One near the west end of the drift assayed 0.17 ounce gold and 6.2 ounces silver per ton, 0.3 percent lead, 0.92 percent copper, and 0.10 percent zinc, the other near the east end of the drift assayed 0.04 ounce gold and 14.1 ounces silver per ton, 0.5 percent lead, 0.68 percent copper, and 0.30 percent zinc. The following summarizes the results of samples on this level:

Commodity	Number of samples	Average length of samples (ft.)	Average weighted assay
Gold	76	2.78	0.06 oz/T.
Silver	76	2.78	4.06 oz/T.
Lead	51	2.57	2.00 percent
Zinc	38	2.45	1.05 percent
Copper	18	2.55	0.50 percent

having a measuring unit

Much of the mineralized zone on the 75 level is characterized by intense iron oxidation and alteration. Distinct veinlets, crusts, and smears of iron oxides discolor the walls and back. This extremely oxidized zone indicates that there has been much leaching of the minerals and that a downward enrichment of some of the minerals might be expected. This should be especially true of the copper minerals. Ruppel in his unpublished report on the Basin quadrangle says as follows:

> "A significant amount of the ore from most of the more productive quartz veins in the map area has come from secondarily enriched veins. Most commonly, the veins have been enriched in silver and lead in the zone of oxidation, but the supergene sulfides--chalcocite and covellite--have formed from primary chalcopyrite at the Crystal mine and probably also at the Bullion mine."

Both the Crystal and the Bullion mines lie within a mile of the Morning mine (pl. I) and both lie in an east-west sheared and altered zone in the quartz monzonite similar to the one at the Morning mine. According to Ruppel, "The aggregate post-1900 production from the Crystal mine totals about 21,000-22,000 tons of ore that contained 3,650 ounces gold, 338,300 ounces silver, 300 tons copper, 98 tons lead, and 1,020 tons zinc. The addition of production before 1900 probably would not greatly increase this total figure."

Using the above statistics, the average ore grade is estimated to be:

Au oz/T	Ag oz/T	Pb %	Zn %	Cu %
0.17	15.73	0.45	4.74	1.40

In comparison to the weighted averages of the Morning mine, the Crystal mine shows an increase of values of all minerals tested. Most of the values obtained in the Morning mine are from the oxidized zone, whereas, as far as known, the values of the Crystal mine were obtained below the oxidized zone. This would indicate a downward enrichment of minerals below the oxidized zone in the general region of the Morning and Crystal mines. ?

The same comparison could be made between the Morning mine and the Bullion mine which lies on a similar structure. Ruppel in his description of the Bullion mine states in part:

"The mine was reopened in 1909 and was worked almost continuously from 1912 to 1948, when it was again closed. The total production from the Bullion mine probably has been about 30,000 tons of ore that contained about 3,300 ounces gold, 250,000 ounces silver, 300 tons copper, and 1,000 tons lead. The amount of zinc contained in this ore is unknown but most probably was about 1,000 tons."

These statistics indicate the average grade to be:

Au oz/T	Ag oz/T	Pb %	Zn %	Cu %
0.11	8.33	3.33	3.33	1.00

The statistics on the Crystal and Bullion mines are given to show that the area around the Morning mine is not necessarily a gold and silver district but to show that sizable amounts of base metals are present and have been produced from the area. It is believed that the values of ore in the Morning vein will increase with depth at least to some point below the oxidized zone.

The Morning vein could not be observed from the 40 level or Catherine Ann adit because of heavy snow pack at the portal, but according to the map furnished by the applicant (pl. IVA), the shear zone with altered aplite and quartz veins was intersected at about 80 feet from the portal. Although the structure appears to continue very strong, the assay results are lower than on the 75 level. This fact would again indicate that there has been some downward leaching of the vein in the oxidized zone and a possible enrichment of the vein or zone below the oxidized portion.

The bulldozer cuts on the surface were also snow covered but were pointed out in the field (pls. II and IVB). These cuts show mainly that the shear and altered zone can be traced for a considerable distance along the strike which appears to continue about N. 70° W. and dip 55°-60° NE. Massive quartz veins within the fault zone appear to persist for over 1,000 feet along the strike. Although the cuts all show some mineralization of gold, silver, lead, zinc, and copper, the assays are all below commercial grade. This low ore grade would be expected in the leached zone at the surface; however, the geologic significance is that the exposures of veins and structures show that they have strength at and near the surface, as well as laterally, and should show strength downward for considerable depth.

George E. Bacraft, Geologist, Geological Survey, who examined the property in October 1952 states in his examination report of March 25, 1953 (Docket No. DMEA-2767): "The presence of tourmaline in the altered country rock and the character of the sheared and altered zone indicate that this structure is similar to others in the Boulder batholith area from which a considerable amount of lead and zinc has been produced in the past."

APPLICANT'S PROPOSAL

The application submitted was very complete in presenting the details for both the sinking and crosscutting programs. The sinking program proposes to explore the 175 and 275 levels by sinking a winze 210 feet from the 75 level and drifting, crosscutting, and long holing on the 175 and 275 levels. The program is set up in two stages with an estimated total cost of $89,346.82.

The crosscutting program, and the one now preferred by the applicant, consists of driving an 850-foot crosscut from a lower elevation to intersect the Morning vein at the 275 level and subsequent drifting, raising, long holing, and crosscutting on the 175 and 275 levels. This program is also set up in two stages with an estimated total cost of $81,480.71.

Since submitting its application, the applicant has continued the drift easterly on the Morning vein. It is the opinion of the applicant now that the winze sinking program will probably have a water problem and that a modified program of its original crosscutting proposal would be the most satisfactory. The applicant also believes that a diamond drill program should precede the crosscutting operation and that the crosscut to the Morning vein should not be started unless it is justified by the diamond drill program.

DISCUSSION OF RECOMMENDED PROGRAM

In recommending a modified version of the applicant's crosscutting plan, the examiners believe that this is the most economical and efficient way that the Morning vein can be explored and examined below the oxidized zone. The 2,200 feet of diamond drilling from the surface should adequately prove the presence or absence of the Morning vein or other parallel veins. Although the core recovery through the altered and oxidized zone will probably not be very high, it should be good in the unaltered rock and in the vein below the oxidized zone. This unaltered or primary zone is the important target area for the exploration. Much will depend upon the findings in this zone as to whether or not the 750 crosscut adit should be driven. If the diamond drilling does not reveal sufficient evidence of possible ore in the Morning vein or parallel

structures, the crosscutting on the 245 level should not be started. It is doubtful if the diamond drilling will show a continuous thickness of the vein as the vein pinches and swells within short distances on the 75 level, both laterally and horizontally, and the same may be expected as the vein continues downward. It is quite possible that some of the drill holes will pass through pinched portions of the vein without indications.

RECOMMENDED EXPLORATION COSTS

Should the Government decide to participate in an exploration project, the following costs are recommended for consideration.

Core Drilling

6 holes - 2,100 feet - AX size

(1) Independent contracts		
Mobilization		
Moving equipment from Helena, Mont. and return (132 miles) 5 hrs. @ $10.00/hr.	$ 50.00	
Preparation of drill sites		
Surface - 6 sites - 12 hrs. bulldozing @ $15.00/hr.	180.00	
Core drilling - 6 holes @ 350 ft/ea. - 2,100 feet		
Drive pipe thru overburden from 0-25' 6 holes, 150 ft. @ $9.00/ft.	1,350.00	
BX drilling from 25-50' 6 holes, 150 ft. @ $6.90/ft.	1,035.00	
AX drilling from 50-250' 6 holes, 1200 ft. @ $6.60/ft.	7,920.00	
AX drilling from 250-350' 6 holes, 600 ft. @ $6.90/ft.	4,140.00	
Reaming and placing casing 700 ft. @ $3.90/ft.	2,730.00	
Cementing and drilling cement 200 ft. @ $3.90/ft.	780.00	
		$18,185.00
(2) Supervision		
2½ months @ $300.00/mo.	750.00	
Consulting engineer-geologist 9 days @ $50.00/day	450.00	
		1,200.00
(3) Operating materials		
~~50~~ core boxes ~~@ $4.00/ea.~~		200.00
(7) Miscellaneous		
70 assays for Ag, Pb, Zn and Cu @ $6.50/ea.		455.00
Total cost of diamond drilling		$20,040.00

Drifting and/or Crosscutting

1,350 feet - 5'x7' in the clear
Advance: 5 feet/shift
270 days - 10.3 months

1.	Independent contracts		none
2.	Labor and supervision		
	2 miners x $18.23/day ea. x 270 days	$ 9,844.20	
?	1 trammer x 17.25/day x 270 days	4,657.50	
	1 outside x 18.23/day x 270 days	4,922.10	
		19,423.80	
	8.3% O.T. of $19,423.80	1,612.18	
	1/2 supervision x $600/mo. x 10.3 mo.	3,090.00	
			$24,125.98
3.	Operating materials and supplies		
	Explosives		
	Dynamite 13,500# @ $22.40/cwt	3,024.00	
	Caps 5,000 @ 2.30/100	115.00	
	Fuse 50,000' @ 1.37/100'	685.00	
		3,824.00	
	Drill accessories		
	65 carbide bits @ 15.60/ea.	1,014.00	
	65 - 6' drill rods @ 9.10/ea.	591.50	
	2 - 50' 3/4" air hose @ 34.40/ea.	68.80	
	2 - 50' 1/2" water " @ 28.80/ea.	57.60	
	2 line oilers @ $21.00/ea. (50% salv.)	21.00	
		1,752.90	
	Track		
	14,391# rail (2700' - 16#) @ $11.65/cwt. (50% salv.)	827.48	
	135 pr. fishplates @ 0.75/pr. (50% salv.)	50.63	
	2700 spikes - 3-1/3 keg @ 17.20/100# keg (820/keg)	57.34	
	540 track bolts - 1-1/4 keg @ 25.30/keg (450/keg)	31.64	
	1 switch stand @ $21.20/ea. (50% salv.)	10.60	
	1 frog @ $35.25/ea. (50% salv.)	17.63	
	4 switch points @ $15/ea. (50% salv.)	30.00	
	675 ties @ $0.35/ea.	236.25	
		1,261.57	

3. Operating materials and supplies (continued)

Pipe		
1,325 ft. of 2" pipe @ $0.454/ft.	(50% salv.)	$300.77
1,325 ft. of 1" pipe @ 0.216/ft.	(50% salv.)	143.10
		443.87
Fittings - 25% of $887.74	(50% salv.)	110.97
		$554.84
Ventilation		
850 ft. 10" ventube @ $111.15/100'	(50% salv.)	472.39
450 ft. 8" ventube @ 87.30/100'	(50% salv.)	196.42
		668.81
Repair parts		
1,350 ft. @ $0.75/ft.		1,012.50
Power and Fuel		
25 gals. diesel oil @ $0.185/gal x 270 days		1,248.75
15 gals. gasoline @ 0.307/gal x 270 days		1,243.35
5 qts. oil @ 0.275/qt x 270 days		371.25
Grease		50.00
		2,913.35
Misc. small tools - expendable		200.00
		$12,187.97

4. Operating equipment - to be furnished - 10.3 mo.

1 Jeep station wagon	($32.33 x 10.3)	333.00
1 Ford dump truck	(33.33 x 10.3)	343.30
1 Mancha trammer	(65.80 x 10.3)	677.74
1 Storage battery charger	(4.16 x 10.3)	42.85
1 Thor air leg (used)	(8.33 x 10.3)	85.80
1 Thor air leg (new)	(14.75 x 10.3)	151.93
12 Mine cars	(35.00 x 10.3)	360.50
1 Canton car transfer	(9.16 x 10.3)	94.35
1 500 cfm compressor (port.)	(108.33 x 10.3)	1,115.80
2 Ventilation fans	(2 x 12.50 x 10.3)	257.50
1 Mucking machine	(33.33 x 10.3)	343.30
1 Electric generating plant	(22.50 x 10.3)	231.75
5 Miners head lamps	(5.42 x 10.3)	55.83
		4,093.65

5. Rehabilitation and repairs — none

6. New buildings, etc.
   Compressor house and tool shed — 250.00

7.	Miscellaneous		
	Unempl. comp., FIC, etc. (14.9% of $24,125.98)	$3,594.77	
	Assaying - 80 samples @ $6.50/ea.	520.00	
	Doze 1/2 mile access road to portal site D-8 or equivalent - 24 hrs. @ $15.00/hr.	360.00	
			$4,474.77
8.	Contingencies		none
	Total cost		$45,132.37

Summary - Drifting and/or Crosscutting

1.	Independent contracts		none
2.	Labor and supervision		$24,125.98
3.	Operating materials and supplies		12,187.97
4.	Operating equipment		4,093.65
5.	Rehabilitation and repairs		none
6.	New buildings, etc.		250.00
7.	Miscellaneous		4,474.77
8.	Contingencies		none
	Total		$45,132.37
	Less: Compressor house	$250.00	
	Assaying	520.00	770.00
	Total cost of drifting & crosscutting		$44,362.37

Cost per foot - $32.86 SAY $33.00

Timbering

570 feet - 5'x7' in the clear
Advance: 25 feet (5 sets) per shift
23 days - 1 month

1. Independent contracts

2. Labor and supervision

2 miners x $18.23/day x 23 days	$ 838.58	
1 trammer-helper @ 17.25/day x 23 days	396.75	
	1,235.33	
8.3% O.T. of $1,235.33	102.53	
1/2 supervision x $600/mo. x 1	300.00	
		$1,637.86

3. Operating materials and supplies

Timber (framed)		
228 posts @ $2.10/ea.	478.80	
114 caps @ 2.10/ea.	239.40	
228 girths @ 2.10/ea.	478.80	
9500 bd. ft. lagging @ $65/M	617.50	
	1,814.50	
Blocks & wedges - 5% of $1,814.50	90.73	
	1,905.23	
Power and Fuel		
5 gals. gas @ $0.307/gal x 23 days	35.31	
1 qt. oil @ 0.275/qt x 23 days	6.33	
	41.64	
		1,946.87

4. Operating equipment - to be furnished - 1 mo.

1 Jeep station wagon		32.33	
1 Ford dump truck	1/4 time	8.33	
1 Mancha trammer	1/4 time	16.45	
1 Storage battery charger	1/4 time	1.04	
4 mine cars		11.67	
1 electric generating plant		22.50	
5 miners head lamps		5.42	
			97.74

5. Rehabilitation and repairs — none

6. New buildings, etc. — none

7.	Miscellaneous Unempl. comp., FIC, etc. (14.9% of $1,637.86)	244.04
8.	Contingencies	none
	Total cost - 570 feet timbering	$3,926.51

Summary - Timbering

1.	Independent contracts	none
2.	Labor and supervision	1,637.86
3.	Operating materials and supplies	1,946.87
4.	Operating equipment	97.74
5.	Rehabilitation and repairs	none
6.	New buildings, etc.	none
7.	Miscellaneous	244.04
8.	Contingencies	none
	Total cost - 570 feet timbering	$3,926.51

Cost per foot - $6.89 SAY $7.00

Excavation for Car Transfer

Slab off crosscut based on 10 feet of drift or crosscut @ $33.00/ft. or $330.00 for station	$ 330.00

Long Hole Drilling

500 feet to test walls

500 feet of long hole drilling @ $1.25/ft.	625.00

Assaying

150 samples - 80 for drift and/or crosscut - 70 for core drilling (sludge and core) Analysis for Ag @ $2.00/ea., Pb, Zn, Cu @ $1.50/ea. 150 samples @ $6.50	975.00

Technical Services

Consulting engineer or geologist 3 days/mo. @ $50.00/day x 10 months	1,500.00

SUMMARY OF ESTIMATED COSTS OF PROJECT

Stage I

Diamond drilling

Independent contracts	
Mobilization and demobilization	50.00
Dozing - D-8 or equivalent	
12 hours @ $15.00/hr.	180.00
Standpipe through overburden	
150 feet @ 9.00/ft.	1,350.00
BX size diamond drilling	
150 feet @ 6.90/ft.	1,035.00
AX size diamond drilling	
1,200 feet @ 6.60/ft.	7,920.00
600 feet @ 6.90/ft.	4,140.00
Reaming and placing casing	
700 feet @ 3.90/ft.	2,730.00
Cementing and drilling cement	
200 feet @ 3.90/ft.	780.00
Labor and supervision	
Supervision - 2½ months @ $300.00/mo.	750.00
Technical services - consulting engineer or geologist - 9 days @ $50.00/day	450.00
Operating materials and supplies	
50 core boxes @ $4.00/each	200.00
Miscellaneous	
280 determinations 1/	
70 silver @ $2.00/ea.	140.00
210 lead or zinc or copper @ $1.50/ea.	315.00
Total cost of Stage I	$20,040.00

1/ Not to exceed 70 of any element

Stage II

1,150 feet * drifting and/or crosscutting @ $33.00/ft.	$37,950.00
570 feet timbering @ $7.00/ft.	3,990.00
Car transfer station	330.00
500 feet long hole drilling @ $1.25/ft.	625.00
Compressor house and tool shed	250.00
Consulting engineer and/or geologist 30 days @ $50.00/day	1,500.00
320 determinations 2/	
80 silver @ $2.00/ea.	160.00
240 lead or zinc or copper @ $1.50/ea.	360.00
Total Cost of Stage II	$45,165.00
Total estimated cost of project	$65,205.00
Government participation @ 50%	32,602.50

2/ Not to exceed 80 for any element

* Note: The crosscutting and drifting requirements were reduced from 1,350 feet to 1,150 feet after the analysis was written.

Enclosures
Distribution:
DMEA(3)
USBM(5)
USGS(SRO)
Docket
Sample

UNITED STATES
DEPARTMENT OF THE INTER

PREPARED FOR
DEFENSE MINERALS EXPLORATION ADMIN ATION
EXAMINATION REPORT

DOCKET NO. DME 1732

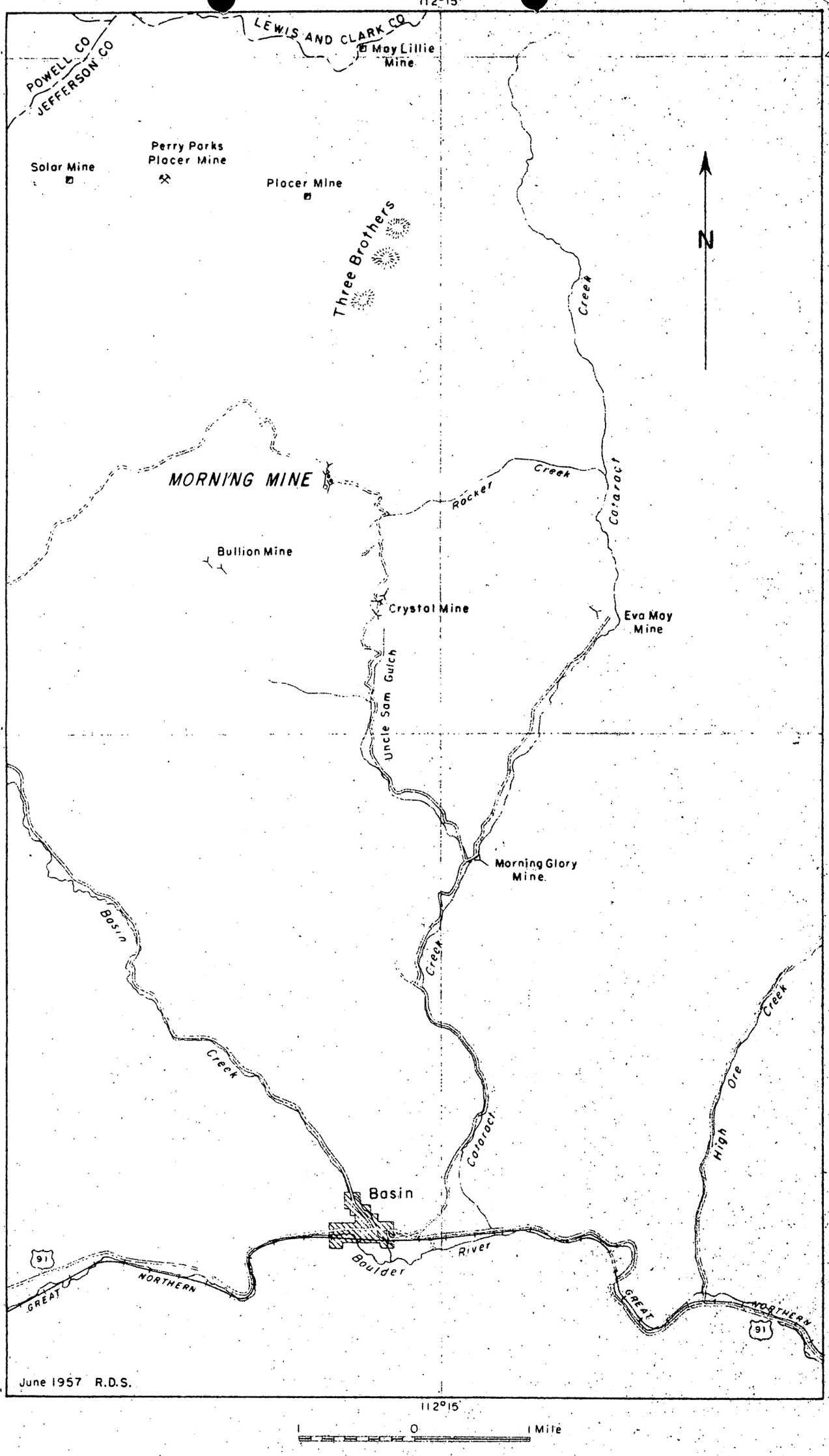

INDEX MAP SHOWING LOCATION OF MORNING MINE

SEC. 18, T. 7 N., R. 5 W., JEFFERSON COUNTY, MONTANA

PLATE I

OFFICIAL FILE COPY
DMEA
RECEIVED SEP 30 1957

DATE	INITIALS	CODE

UNITED STATES
DEPARTMENT OF THE INTERIOR
DEFENSE MINERALS EXPLORATION ADMINISTRATION
So. 157 Howard Street
Spokane 4, Washington

September 23, 1957

MEMORANDUM

To: DMEA Field Team, Region I

From: R. D. Sample, Geologist, U. S. Geologist Survey

Subject: Additional information on the Western American of Montana, Inc., Morning Mine, Jefferson County, Montana. Docket No. DMEA-4732 (lead-zinc-copper).

During the summer of 1957 and while processing of the application for Government aid was being conducted, the Western American of Montana, Inc. did some exploration and assaying at their own expense on the 75 level of the Morning mine in Jefferson County, Montana.

The results of this exploration were transmitted to this office and received on September 20, 1957.

According to the applicant's map, there has been some revision of the interpretation of the geology on the 75 level, and apparently about 30 feet more of drift has been driven to the east on the strong mineralized quartz vein. In addition 34 assays were taken along the main structure, including the new drifting. The assays indicate that the mineralized structure is continuing to the east and should continue to some distance downward.

A recapitulation of the weighted assays are as follows:

Commodity	No. of samples	Assay
Gold	32	0.081 oz/T
Silver	32	10.56 oz/T
Lead	31	2.64 %
Copper	20	1.42 %
Zinc	15	2.02 %

Distribution:
DMEA (3)
USBM (5)
USGS (SRO)
Docket
Sample

Initialed by
[illegible]
10/2/57
[illegible]

A. V. TRENT,
Owner-Manager

DMEA

GOODALL BROTHERS

ASSAYERS AND METALLURGICAL CHEMISTS

46 South Main Street, Helena, Montana

TEL. HI 2-3770
P. O. BOX 537

RECEIVED JUL 30 1957 JDMEA

Date JUL 9 - 1957

UMPIRE ASSAY _____ CONTROL ASSAY _____ HAND SAMPLE _____

ASSAYED FOR Western American of Montana

MARKS:

Sample No.	DESCRIPTION	GOLD Ozs. Per Ton	SILVER Ozs. Per Ton	WET LEAD Per Cent	COPPER Per Cent	ZINC Per Cent	IRON Per Cent	INSOL. Per Cent	Per Cent	Total Value Per Ton
MM-87		0.14	11.2	6.8						
" 88		0.09	8.1	1.0	2.0	2.2				

Gold not deducted: _____

Charges $ 10.00

GOODALL BROS.

By A. V. Trent

A. V. TRENT,
Owner-Manager

GOODALL BROTHERS

ASSAYERS AND METALLURGICAL CHEMISTS

46 South Main Street, Helena, Montana

TEL. HI 2-3770
P. O. BOX 537

Date JUL 16 1957

UMPIRE ASSAY _____ CONTROL ASSAY _____ HAND SAMPLE _____

ASSAYED FOR: Western America of Montana

MARKS:

Sample No.	DESCRIPTION	GOLD Ozs. Per Ton	SILVER Ozs. Per Ton	WET LEAD Per Cent	COPPER Per Cent	ZINC Per Cent	IRON Per Cent	INSOL. Per Cent	Per Cent	Total Value Per Ton
MM-89		0.04	5.7	5.4	0.3	None				
✓ 90		0.12	21.6	2.6	2.9	4.7				
✓ 91		0.12	29.1	6.6	0.4	None				

RECEIVED
SEP 30 1957
D.M.E.A.

Gold not deducted: _____

Charges $ 19.50

GOODALL BROS.

By A. V. Trent

A. V. TRENT,
Owner-Manager

GOODALL BROTHERS

ASSAYERS AND METALLURGICAL CHEMISTS
46 South Main Street, Helena, Montana

TEL. HI 2-3770
P. O. BOX 537

Date JUL 20 1957

UMPIRE ASSAY _____ CONTROL ASSAY _____ HAND SAMPLE _____

ASSAYED FOR Western America of Montana

MARKS:

Sample No.	DESCRIPTION	GOLD Ozs. Per Ton	SILVER Ozs. Per Ton	WET LEAD Per Cent	COPPER Per Cent	ZINC Per Cent	IRON Per Cent	INSOL. Per Cent	Per Cent	Total Value Per Ton
92	MM	0.03	2.6	2.6	0.1	Trace				
93	"	0.03	8.0	0.2	1.0	0.4				
94	"	0.04	2.2	0.8	1.35	1.7				
95	"	0.15	13.7	4.2	0.7	0.3				
96	"	0.05	2.9	1.6	0.8	3.5				

RECEIVED
SEP 30 1957
D.M.E.A.

Gold not deducted: _____

Charges $ 32.50

GOODALL BROS.

By A. V. Trent

A. V. TRENT,
Owner-Manager

GOODALL BROTHERS

ASSAYERS AND METALLURGICAL CHEMISTS
46 South Main Street, Helena, Montana

TEL. HI 2-3770
P. O. BOX 537

Date JUL 26 1957

UMPIRE ASSAY _____ CONTROL ASSAY _____ HAND SAMPLE _____

ASSAYED FOR Western America of Montana

MARKS:

Sample No.	DESCRIPTION	GOLD Ozs. Per Ton	SILVER Ozs. Per Ton	WET LEAD Per Cent	COPPER Per Cent	ZINC Per Cent	IRON Per Cent	INSOL. Per Cent	Per Cent	Total Value Per Ton
MM-97		0.04	0.6	0.4						
98		0.06	0.9	0.6	Trace	0.3				
99		0.05	3.0	2.6						
100		0.10	8.2	1.4	1.0	0.4				
101		0.09	6.3	0.4	2.0	0.5				
102		0.10	6.7	2.9						

(Note: MM-102 contains copper)

RECEIVED SEP 30 1957 D.M.E.A.

Gold not deducted: _____

Charges $ 30.00

GOODALL BROS.

By A. V. Trent

A. V. TRENT,
Owner-Manager

GOODALL BROTHERS

ASSAYERS AND METALLURGICAL CHEMISTS

46 South Main Street, Helena, Montana

TEL. HI 2-3770
P. O. BOX 537

Date JUL 31 1957

UMPIRE ASSAY _____ CONTROL ASSAY _____ HAND SAMPLE _____

ASSAYED FOR Western America of Montana

MARKS:

Sample No.	DESCRIPTION	GOLD Ozs. Per Ton	SILVER Ozs. Per Ton	WET LEAD Per Cent	COPPER Per Cent	ZINC Per Cent	IRON Per Cent	INSOL. Per Cent	Per Cent	Total Value Per Ton
MM-103		0.13	24.1	2.4	3.8	13.3				
104		0.12	8.2	3.2						
105		0.10	4.3	1.0	0.5	0.8				
106		0.005	1.0	1.4						
107		0.02	1.6	1.2						

RECEIVED
SEP 30 1957
D.M.E.A.

Gold not deducted: _____

Charges $ 23.50

GOODALL BROS.

By A. V. Trent

A. V. TRENT,
Owner-Manager

GOODALL BROTHERS

ASSAYERS AND METALLURGICAL CHEMISTS

46 South Main Street, Helena, Montana

TEL. HI 2-3770
P. O. BOX 537

Date AUG 2 - 1957

UMPIRE ASSAY _____ CONTROL ASSAY _____ HAND SAMPLE _____

ASSAYED FOR Western America of Montana

MARKS:

Sample No.	DESCRIPTION	GOLD Ozs. Per Ton	SILVER Ozs. Per Ton	WET LEAD Per Cent	COPPER Per Cent	ZINC Per Cent	IRON Per Cent	INSOL. Per Cent	Per Cent	Total Value Per Ton
MM-108		0.08	4.9	1.6						

RECEIVED
SEP 30 1957
D.M.E.A.

Gold not deducted: _____

Charges $ 3.50

GOODALL BROS.

By A. V. Trent

A. V. TRENT,
Owner-Manager

GOODALL BROTHERS

ASSAYERS AND METALLURGICAL CHEMISTS

46 South Main Street, Helena, Montana

TEL. HI 2-3770
P. O. BOX 537

Date AUG 14 1957

UMPIRE ASSAY _____ CONTROL ASSAY _____ HAND SAMPLE _____

ASSAYED FOR Western America of Montana

MARKS:

Sample No.	DESCRIPTION	GOLD Ozs. Per Ton	SILVER Ozs. Per Ton	WET LEAD Per Cent	COPPER Per Cent	ZINC Per Cent	IRON Per Cent	INSOL. Per Cent	Per Cent	Total Value Per Ton
M-109		0.04	3.6	3.4						
110		0.09	16.8	0.4						
111		0.20	3.8	None	0.6	0.4				
112		0.11	11.8	4.0						
113		0.10	14.2	5.0						

RECEIVED
SEP 30 1957
D.M.E.A.

Gold not deducted: _____

Charges $ 20.50

GOODALL BROS.

By A. V. Trent

A. V. TRENT,
Owner-Manager

GOODALL BROTHERS

ASSAYERS AND METALLURGICAL CHEMISTS

46 South Main Street, Helena, Montana

TEL. HI 2-3770
P. O. BOX 537

Date AUG 20 1957

UMPIRE ASSAY _____ CONTROL ASSAY _____ HAND SAMPLE _____

ASSAYED FOR Western American of Montana

MARKS:

Sample No.	DESCRIPTION	GOLD Ozs. Per Ton	SILVER Ozs. Per Ton	WET LEAD Per Cent	COPPER Per Cent	ZINC Per Cent	IRON Per Cent	INSOL. Per Cent	Per Cent	Total Value Per Ton
MM-114		0.10	13.9	4.2	0.3	0.1				
115		0.16	23.1	3.0	0.5	0.1				

RECEIVED SEP 30 1957 D.M.E.A.

Gold not deducted: _____

Charges $ 13.00

GOODALL BROS.

By A. V. Trent

A. V. TRENT,
Owner-Manager

GOODALL BROTHERS

ASSAYERS AND METALLURGICAL CHEMISTS

46 South Main Street, Helena, Montana

TEL. HI 2-3770
P. O. BOX 537

Date AUG 22 1957

UMPIRE ASSAY _____ CONTROL ASSAY _____ HAND SAMPLE _____

ASSAYED FOR: Western America & Montana

MARKS:

Sample No.	DESCRIPTION	GOLD Ozs. Per Ton	SILVER Ozs. Per Ton	WET LEAD Per Cent	COPPER Per Cent	ZINC Per Cent	IRON Per Cent	INSOL. Per Cent	Per Cent	Total Value Per Ton
MM-116		0.08	15.7	2.2	0.9	0.1				
117		Trace	0.9							
118		0.005	1.9	0.4	0.2	None				
119		0.02	3.8	1.2	0.3	0.2				

RECEIVED
SEP 30 1957
D.M.E.A.

Gold not deducted: _____

Charges $ 7.50

GOODALL BROS.

By A. V. Trent

4

A. V. TRENT,
Owner-Manager

GOODALL BROTHERS

ASSAYERS AND METALLURGICAL CHEMISTS

46 South Main Street, Helena, Montana

TEL. HI 2-3770
P. O. BOX 537

Date AUG 14 1957

UMPIRE ASSAY _____ CONTROL ASSAY _____ HAND SAMPLE _____

ASSAYED FOR Western America of Montana

MARKS:

Sample No.	DESCRIPTION	GOLD Ozs. Per Ton	SILVER Ozs. Per Ton	WET LEAD Per Cent	COPPER Per Cent	ZINC Per Cent	IRON Per Cent	INSOL. Per Cent	Per Cent	Total Value Per Ton
	Special	0.03	6.7	9.6						

RECEIVED SEP 30 1957 D.M.E.A.

Gold not deducted: _____

Charges $ 3.50

GOODALL BROS.

By A. V. Trent

4

SUPPLEMENTARY ASSAY DATA
75-LEVEL, MORNING MINE

Sample No.	Thickness in feet	Description of interval sampled, and location.	Au, ozs/ton	Ag, ozs/ton	Pb, %	Cu, %	Zn, %
MM-87	4.0	Oxidized vein material. 14.0' E. of Sta. 14.	0.14	11.2	6.8	—	—
MM-88	5.0	Sooty black sulphides. 14.0' E. of Sta. 14.	0.09	8.1	1.0	2.0	2.2
MM-89	1.5	Oxidized vein material. 18.5' E. of Sta. 14. Rt. 1/3 of face.	0.04	5.7	5.4	0.3	—
MM-90	2.3	Black, sooty sulphides. 18.5' E. of Sta. 14. Center 1/3 of face.	0.12	21.6	2.6	2.9	4.7
MM-91	4.5	Oxidized vein material. 18.5' E. of Sta. 14. Left 1/3 of face.	0.12	29.1	6.6	0.4	—
MM-92	1.5	Mixed oxides and quartz. Rt. 1/4 of face. 21.5' E. of Sta. 14.	0.03	2.6	2.6	0.1	tr.
MM-93	1.3	Black and gray sulphides Rt. 1/2 of center. 21.5' E. of Sta. 14.	0.03	8.0	0.2	1.0	0.4
MM-94	2.5	Black sulphides. Lt. 1/2 of center. 21.5' E. of Sta. 14.	0.04	2.2	0.8	1.35	1.7
MM-95	1.5	Oxidized vein material. Lt. 1/4 of face. 21.5' E. of Sta. 14.	0.15	13.7	4.2	0.7	0.3
MM-96	Grab	Black sulphides.	0.05	2.9	1.6	0.8	3.5
MM-97	1.2	Oxidized vein material. 24.2' E. of Sta. 14. Rt. 1/5 of face.	0.04	0.6	0.4	—	—
MM-98	0.8	Altered aplite w/ pods of sulphides. 24.2' E. of Sta. 14. Just left of MM-97.	0.06	0.9	0.6	tr.	0.3
MM-99	1.0	White quartz w/ limonite staining. 24.2' E. of Sta. 14. Left of MM-98.	0.05	3.0	2.6	—	—
MM-100	2.5	Silicified aplite carrying pyrite. 24.2' E. of Sta. 14. Left of MM-99.	0.10	8.2	1.4	1.0	0.4
MM-101	1.6	Sulphides under hard hangingwall. 24.2' E. of Sta. 14. Left of MM-100.	0.09	6.3	0.4	2.0	0.5

SUPPLEMENTARY ASSAY DATA, 75-LEVEL, CONTINUED

Sample No.	Thickness in feet.	Description of interval sampled, and location	Au, ozs/ton	Ag, ozs/ton	Pb, %	Cu, %	Zn, %
MM-102	1.8'	Oxidized vein material. Left wall under hanging-wall as in MM-101. 19.2' E. of Sta. 14.	0.10	6.7	2.9	tr.	—
MM-103	2.0	Black, sooty sulphides. 26.0' E. of Sta. 14.	0.13	24.1	2.4	3.8	13.3
MM-104	1.8'	Oxidized vein material. 29.0' E. of Sta. 14. On left of face.	0.12	8.2	3.2	—	—
MM-105	2.1	Black sulphides and some oxides. To the right of MM-104. 29.0' E. of Sta. 14.	0.10	4.3	1.0	0.5	0.8
MM-106	3.0	Limonite stained quartz. To the right of MM-105. 29.0' E. of Sta. 14	0.005	1.0	1.4	—	—
MM-107	1.5	Stained quartz. To the right of MM-106. 29.0' E. of Sta. 14.	0.02	1.6	1.2	—	—
MM-108	2.0	Vuggy, oxidized vein material. 32.0' E. of Sta. 14.	0.08	4.9	1.6	—	—
MM-109	3.6	Oxidized vein material. 17.5' E. of Brunton Sta. 15.	0.04	3.0	3.4	—	—
MM-110	4.3	Oxidized vein material. 21.0' E. of Brunton Sta. 15.	0.09	16.8	0.4	—	—
MM-111	0.5	Sulphides of iron. Under MM-110. 21.0' E. of Brunton Sta. 15.	0.20	3.8	none	0.6	0.4
MM-112	2.8	Oxidized vein material. 25.0' E. of Brunton Sta. 15.	0.11	11.8	4.0	—	—
MM-113	2.0	Oxidized vein material. 28.0' E. of Brunton Sta. 15.	0.10	14.2	5.0	—	—
MM Special	Grab	Oxidized vein from near MM-109. Siliceous box-works.	0.03	6.7	9.6	—	—

SUPPLEMENTARY ASSAY DATA, 75-LEVEL MORNING MINE, CONTINUED

Sample No.	Thickness in feet.	Description of interval sampled, and location.	Au, ozs/ton	Ag, ozs/ton	Pb, %	Cu, %	Zn, %
MM-114	2.5	Oxidized vein material. 33.0' NE of Brunton Sta. 15.	0.10	13.9	4.2	0.3	0.1
MM-115	2.0	Oxidized vein material, Some sulphides. 37.0' NE of Brunton Sta. 15, low on left wall.	0.16	23.1	3.0	0.5	0.1
MM-116	4.0	Mixed sulphides and oxidized vein material, 42.0' NE of Brunton Sta. 15, low on face near sill.	0.08	15.7	2.2	0.9	0.1
MM-117	2.5	Right 1/3 of face, 42.0' NE of Brunton Sta. 15. Limonitic interval under relatively coarse aplite hangingwall.	tr.	0.9	--	--	--
MM-118	1.5	Right wall of drift, under MM-117. Approx. 41.0' NE of Brunton Sta. 15.	0.005	1.9	0.4	0.2	none
MM-119	2.0	Right wall of drift, low, under MM-118. Approx. 38.0' NE of Brunton Sta. 15.	0.02	3.8	1.2	0.3	0.2

MORNING MINE

SUPPLEMENTARY SAMPLE LOCATION PLAT

75 LEVEL

SCALE: 1" = 20'

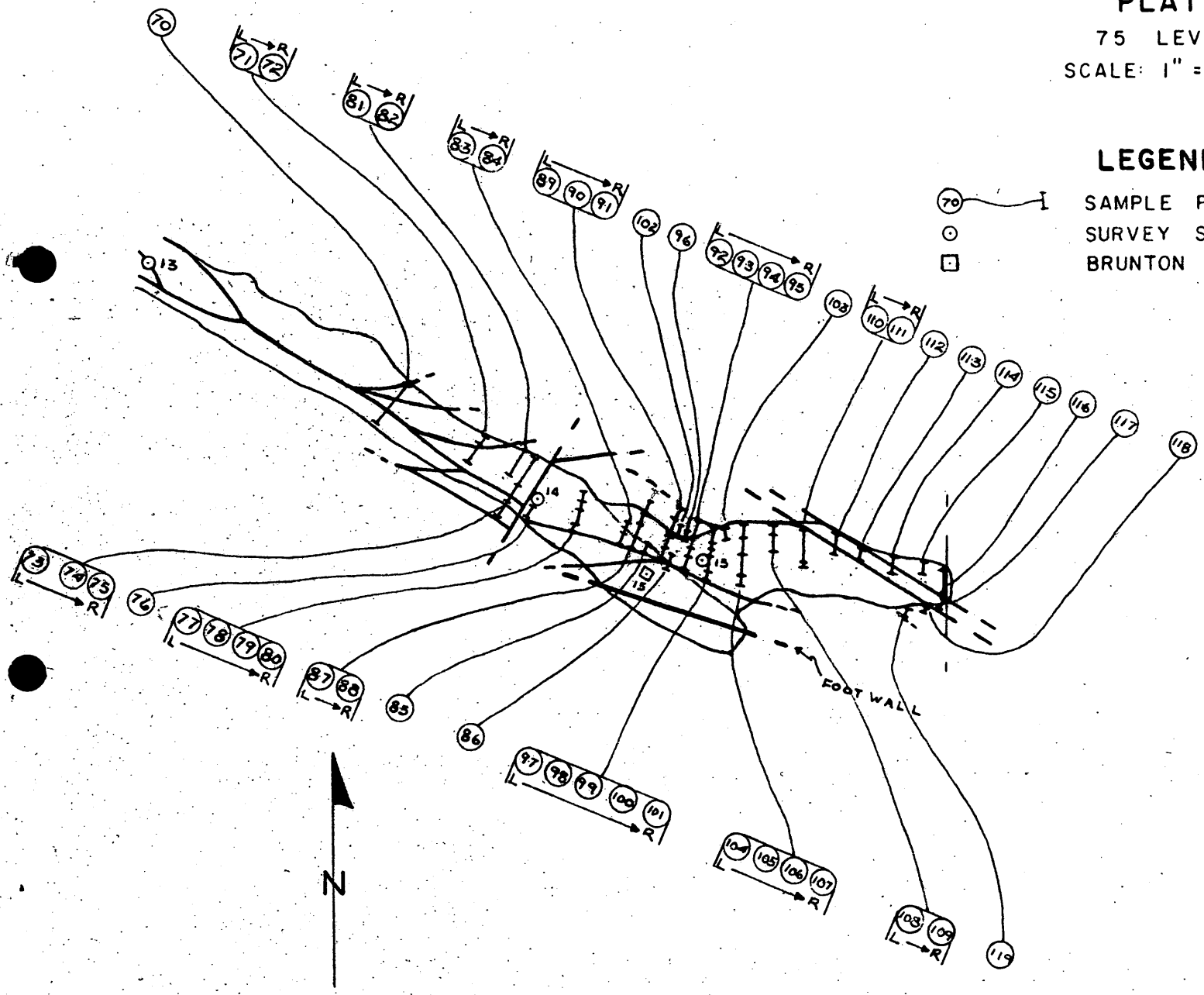

UNDERGROUND GEOLOGY

75 LEVEL

MORNING MINE

JEFFERSON COUNTY, MONTANA

SCALE: 1" = 40'

DATE: AUGUST, 1957

REVISED:

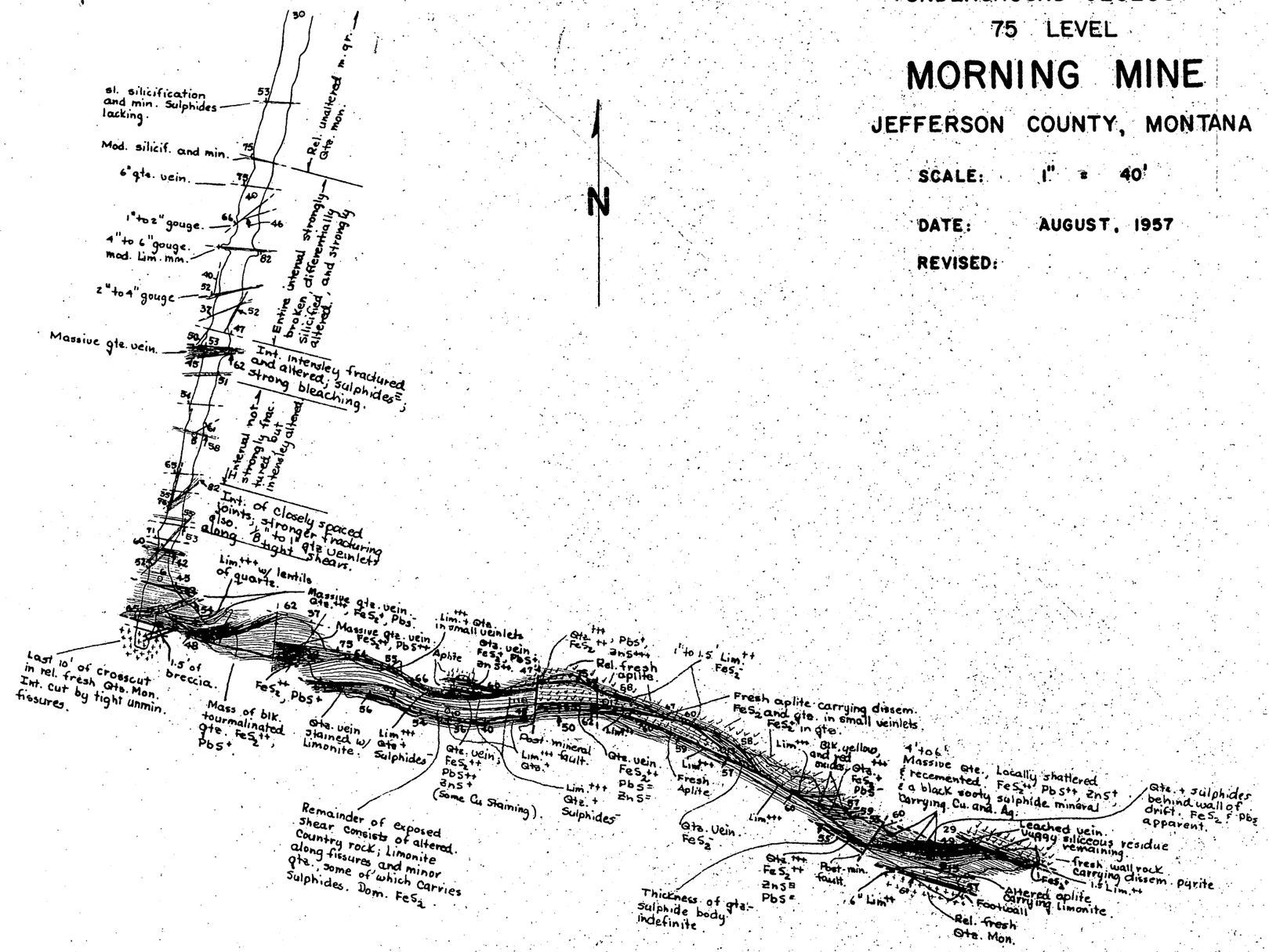

DMEA Form 7
(12-56)

OFFICIAL FILE COPY

Date	Surname	Code
500		
5/8		500
		500
5/8	Selfridge	130
		220
5/8	Johnson	110
"	Whittemore	100
		500.

Mr. A. E. Weissenborn
Executive Officer
DMEA Field Team, Region I
Northwest District
South 157 Howard Street
Spokane 4, Washington

MAY - 8 1957

Re: Docket No. DMEA-4732 (Lead-Zinc-Copper)
Western American of Montana, Inc.
Morning Mine
Jefferson County, Montana

Dear Mr. Weissenborn:

We note by your letter, dated April 19, 1957, that the cited property will be examined by the Field Team during the following week. Therefore, we will hold this application in abeyance until we receive your report and recommendation.

In the event that you should consider the application favorably, the Applicant should be requested to obtain Consents to Lien and Subordination Agreements from the owners of the property. Also, we would appreciate receiving a property map showing the proposed work of a size which can be attached to copies of a contract, if the Applicant should be granted Government exploration assistance.

The Applicant's estimated costs for the proposed work are excessively high and should be carefully reviewed by the Field Team. If the equipment as listed by the Applicant is not new, an estimate should be made of its present value.

Copies of memoranda dated April 24 and April 25, 1957, by T. H. Kiilsgaard, Geological Survey, and A. D. McMahon, Bureau of Mines, respectively, relating to the project are enclosed for your information.

Also, enclosed is one copy of the application for the cited property for the use of the Field Team.

Sincerely yours,
George C. Selfridge (by ds)
Chairman, Operating Committee

P. S. If you consider this application favorably, the Applicant should submit an Assignment of Lease from the Western America Uranium Exploration Corporation.

Enclosures
APPROVED:

Frank D. Lamb (by ds)
Member, Bureau of Mines

Thor H. Kiilsgaard (by ds)
Member, Geological Survey

JWAlt/er 5/8/57
Copy to: Docket
Admr R File
Op. Committee
Mr. McMahon, USBM
Mr. Kiilsgaard, USGS
Chron.

8623

DMEA Form 7
(12-56)

OFFICIAL FILE COPY

Date	Surname	Code
5/8	[illegible]	500
	[illegible]	500
5/8	[illegible]	130
"	[illegible]	110
"	[illegible]	100
5/9	[illegible]	225
		3 00.

Lamb
Kiilsgaard

MAY - 8 1957

Mr. T. V. Leonard, President
Western American of Montana, Inc.
Post Office Box 782
Helena, Montana

Re: Docket No. DMEA-4732 (Lead-Zinc-Copper)
Western American of Montana, Inc.
Morning Mine
Jefferson County, Montana

Dear Mr. Leonard:

Copies of your application have been forwarded to this office by Mr. A. E. Weissenborn, Executive Officer, Region I, Northwest District, who informed us that an examination of the cited property was scheduled to be made at an early date.

As soon as we receive the examination report, we will continue processing your application.

Sincerely yours,

Administrator

JWAlt/er 5/8/57
Copy to: Docket
Admr R File
Op. Committee
Mr. McMahon, USBM
Mr. Kiilsgaard, USGS
Region I, NW Dist. (2)
Chron.

8623

OFFICIAL FILE COPY
DMEA
RECEIVED APR 25 1957

DATE	INITIALS	CODE
4/25	C	220
4/26	Jwa	500

UNITED STATES
DEPARTMENT OF THE INTERIOR
BUREAU OF MINES
WASHINGTON 25, D. C.

April 25, 1957

Memorandum

To: W. R. Griswold, Defense Minerals Exploration Administration

From: Commodity Specialist, Branch of Base Metals

Subject: New application, Docket No. DMEA 4732 (lead, zinc, copper), Western American of Montana, Inc., Morning Mine, Jefferson County, Montana. $89,346.82 ($81,480.71)

The applicant proposes to explore the Morning shear zone to a depth of 275 feet with a program consisting of a 210 foot winze, 1000 feet of crosscutting and drifting, and 1000 feet of long hole drilling for a total cost of $89,346.82. An alternate plan of crosscutting 850 feet on the 275-level followed by 110 feet of raising and 1000 feet of crosscutting and drifting is proposed in the event the sinking program proves infeasible due to the probability of encountering flood water conditions.

It is noted that a DMEA project was denied for this property April 27, 1957 but that the Field Team considers a re-examination is justified because of the amount of exploration work carried on by the applicant since the inspection in 1953. It is also noted that the field examiners were scheduled to make the examination of this property during the week of April 21-27.

A. D. McMahon

A. D. McMahon

Attachment

Copy to: Division of Minerals
Branch of Base Metals (2)
Thor Kiilsgaard, U.S.G.S.
F. D. Lamb
F i l e s

IN REPLY REFER TO:

OFFICIAL FILE COPY
DMEA
RECEIVED APR 24 1957

DATE	INITIALS	CODE
4/24	C	R20
4/25	aeb	500

UNITED STATES
DEPARTMENT OF THE INTERIOR
GEOLOGICAL SURVEY
WASHINGTON 25, D. C.

April 24, 1957
Re: DMEA Docket 4732 (lead-zinc)
Western America of Montana, Inc.
Jefferson County, Montana

Memorandum

To: ~~W. R. Griswold,~~ Defense Minerals Exploration Administration

From: T. H. Kiilsgaard, U. S. Geological Survey

Subject: Review of application

In a well-documented application, it is proposed to further explore the Morning mine by one of the two projects as follows:

1) Winze sinking on the vein, with attendant drifting on two levels, the cost totaling $89,346.82.

2) A lower level adit from which a raise would be driven to an overlying sub-level, the cost totaling $81,480.71.

The Executive officer states that a field examination will have been made by the time this review is written. He also draws attention to the fact that an application on this same property was denied in 1953 (docket 2767). Perusal of this former docket shows that the work that was denied was very similar to the work now proposed for the winze sinking program, which, incidentally, is the proposal favored by the applicant in the present application.

While the current field examination being made by the Field Team will turn up some new information and will get a better picture of what is planned by the applicant, there probably will be little learned of the geology of the vein that is not already known as it and nearby comparable veins have been extensively studied in the past. It is a broad shear zone, cutting granitic rocks of the Boulder batholith, and in which are discontinuous blebs and lenses of silver-lead mineralization, some of which apparently are of small ore shoot size. As such, it has much in common with other comparable veins in the Boulder district, some of which formerly were precious metal producers in times past but which have been non-productive in recent years, even though many of them have been rather extensively explored.

The maps and assays in Miller's accompanying report give a good picture of what has been found and of what might be expected. In this respect, it would appear that Miller's estimate of a value of $17.44 per ton for indicated and inferred ore is based on good data, and it might be presumed that if a large enough body of ore of this grade were found, the mine could become productive. Unfortunately, however, ore of this grade must be considered as marginal in an operation of the type that would be necessary at the Morning mine. Furthermore, large ore bodies have not been characteristic of the veins heretofore worked in similar veins in the Boulder area.

I recommend that the Field Team be asked for their report, and that their report be compared with the report in docket 2767 before a decision is reached concerning the present application.

T. H. Kiilsgaard

T. H. Kiilsgaard

UNITED STATES
DEPARTMENT OF THE INTERIOR
Defense Minerals Exploration Administration
Washington 25, D. C.

April 22, 1957

Mr. T.V. Leonard, President,
Western American of Montana, Inc.,
P.O. Box 782,
Helena, Montana.

Subject: DMEA 4732
Re: Exploration Assistance

Dear Mr. Leonard:

Your application for exploration assistance, dated April 18, 1957, submitted to our office at Spokane, Washington, has been assigned Docket Number DMEA 4732 and referred to the Base Metals Division in the Washington office. Kindly identify all future correspondence relating to your application by this Docket Number.

Sincerely yours,

Allen S. Dakan, Chief
Operations Control and
Statistics Division

Copy to: Region I-NW.

UNITED STATES
DEPARTMENT OF THE INTERIOR

PREPARED FOR
DEFENSE MINERALS EXPLORATION ADMINISTRATION
EXAMINATION REPORT

DOCKET NO. DMEA 4732

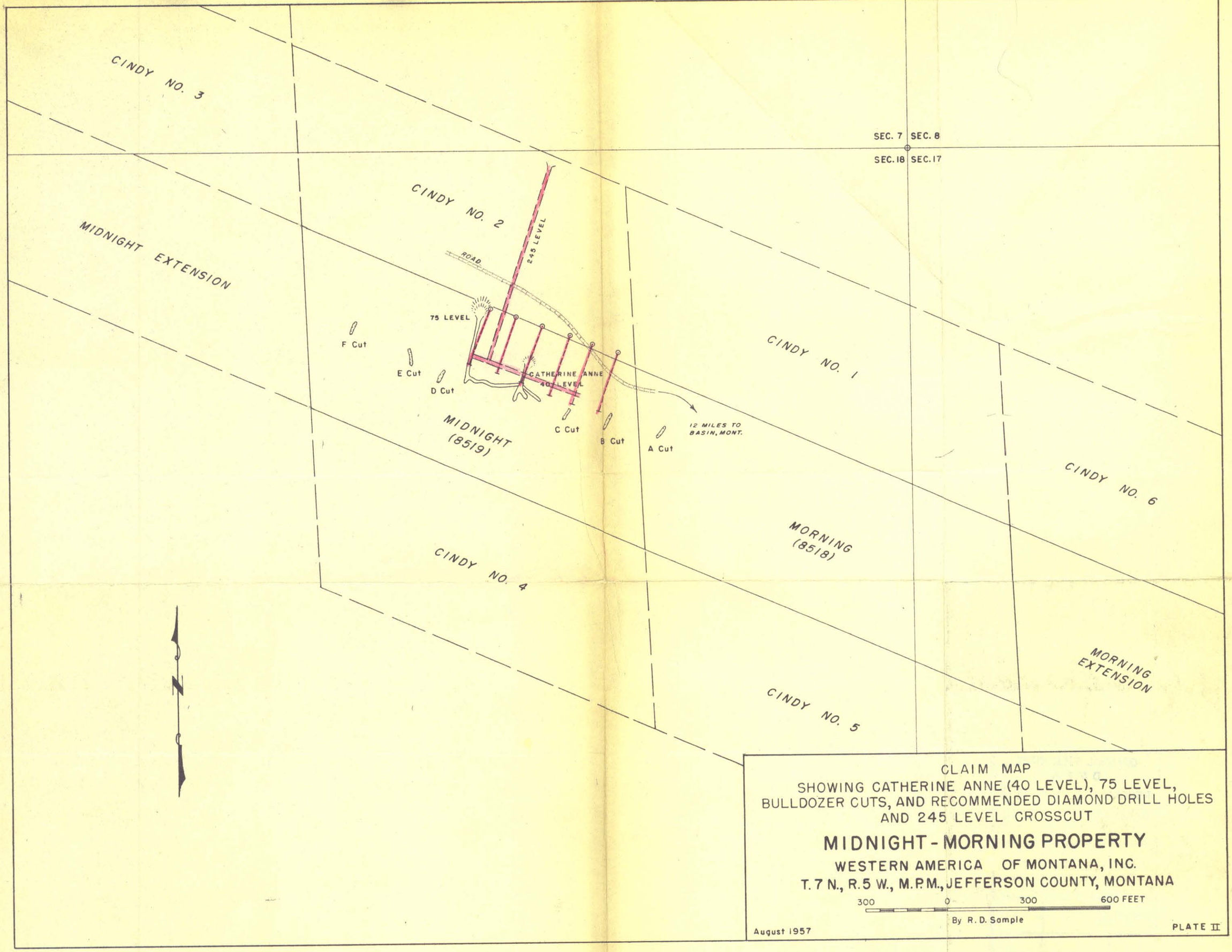

CLAIM MAP
SHOWING CATHERINE ANNE (40 LEVEL), 75 LEVEL,
BULLDOZER CUTS, AND RECOMMENDED DIAMOND DRILL HOLES
AND 245 LEVEL CROSSCUT

MIDNIGHT - MORNING PROPERTY

WESTERN AMERICA OF MONTANA, INC.
T. 7 N., R. 5 W., M.P.M., JEFFERSON COUNTY, MONTANA

300 0 300 600 FEET

By R. D. Sample

August 1957

PLATE II

UNITED ST. E
DEPARTMENT OF THE INTERIOR

PREPARED FOR
DEF SE MINERALS EXPLORATION A
EXAMINATION REPOR

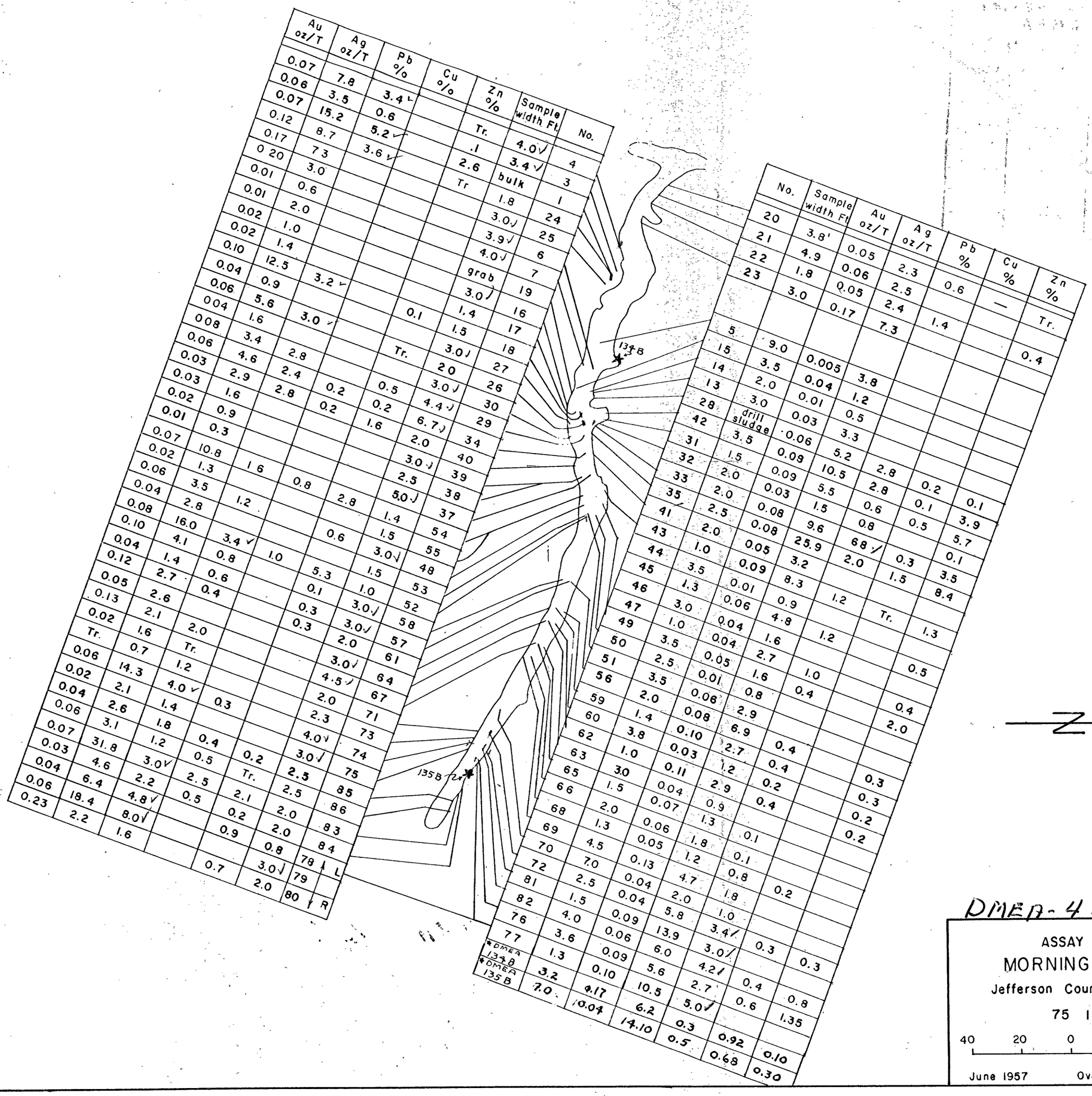

No.	Sample width Ft	Au oz/T	Ag oz/T	Pb %	Cu %	Zn %
20	3.8'	0.05	2.3	0.6	—	Tr.
21	4.9	0.06	2.5			
22	1.8	0.05	2.4	1.4		0.4
23	3.0	0.17	7.3			
5	9.0	0.005	3.8			
15	3.5	0.04	1.2			
14	2.0	0.01	0.5			
13	3.0	0.03	3.3			
28	drill sludge	0.06	5.2	2.8	0.2	0.1
42	3.5	0.09	10.5	2.8	0.1	3.9
31	1.5	0.09	5.5	0.6	0.5	5.7
32	2.0	0.03	1.5	0.8		0.1
33	2.0	0.08	9.6	68 ✓	0.3	3.5
35	2.5	0.08	25.9	2.0	1.5	8.4
41	2.0	0.05	3.2			
43	1.0	0.09	8.3	1.2	Tr.	1.3
44	3.5	0.01	0.9			
45	1.3	0.06	4.8	1.2		0.5
46	3.0	0.04	1.6			
47	1.0	0.04	2.7	1.0		0.4
49	3.5	0.05	1.6	0.4		2.0
50	2.5	0.01	0.8			
51	3.5	0.06	2.9			
56	2.0	0.08	6.9	0.4		
59	1.4	0.10	2.7	0.4		
60	3.8	0.03	1.2	0.2		0.3
62	1.0	0.11	2.9	0.4		0.3
63	3.0	0.04	0.9			0.2
65	1.5	0.07	1.3	0.1		0.2
66	2.0	0.06	1.8	0.1		
68	1.3	0.05	1.2	0.8		
69	4.5	0.13	4.7	1.8	0.2	
70	7.0	0.04	2.0	1.0		
72	2.5	0.04	5.8	3.4 ✓	0.3	0.3
81	1.5	0.09	13.9	3.0 ✓		
82	4.0	0.06	6.0	4.2 ✓	0.4	0.8
76	3.6	0.09	5.6	2.7	0.6	1.35
77	1.3	0.10	10.5	5.0 ✓		
*DMEA 134B	3.2	4.17	6.2	0.3	0.92	0.10
*DMEA 135B	7.0	10.04	14.10	0.5	0.68	0.30

Au oz/T	Ag oz/T	Pb %	Cu %	Zn %	Sample width Ft	No.
0.07	7.8	3.4 ✓		Tr.	4.0 ✓	4
0.06	3.5	0.6		.1	3.4 ✓	3
0.07	15.2	5.2 ✓		2.6	bulk	1
0.12	8.7	3.6 ✓		Tr	1.8	24
0.17	7.3				3.0 ✓	25
0.20	3.0				3.9 ✓	6
0.01	0.6				4.0 ✓	7
0.01	2.0				grab	19
0.02	1.0				3.0 ✓	16
0.02	1.4				1.4	17
0.10	12.5	3.2 ✓		0.1	1.5	18
0.04	0.9				3.0 ✓	27
0.06	5.6	3.0 ✓		Tr.	2.0	26
0.04	1.6				3.0 ✓	30
0.08	3.4	2.8		0.5	4.4 ✓	29
0.06	4.6	2.4	0.2	0.2	6.7 ✓	34
0.03	2.9	2.8	0.2	1.6	2.0	40
0.03	1.6				3.0 ✓	39
0.02	0.9				2.5	38
0.01	0.3				5.0 ✓	37
0.07	10.8	1.6			1.4	54
0.02	1.3		0.8	2.8	1.5	55
0.06	3.5	1.2			3.0 ✓	48
0.04	2.8			0.6	1.5	53
0.08	16.0	3.4 ✓	1.0		1.0	52
0.10	4.1	0.8		5.3	3.0 ✓	58
0.04	1.4	0.6		0.1	3.0 ✓	57
0.12	2.7	0.4		0.3	2.0	61
0.05	2.6			0.3	3.0 ✓	64
0.13	2.1	2.0			4.5 ✓	67
0.02	1.6	Tr.			2.0	71
Tr.	0.7	1.2			2.3	73
0.06	14.3	4.0 ✓	0.3		4.0 ✓	74
0.02	2.1	1.4			3.0 ✓	75
0.04	2.6	1.8	0.4	0.2	2.5	85
0.06	3.1	1.2	0.5	Tr.	2.5	86
0.07	31.8	3.0 ✓	2.5	2.1	2.0	83
0.03	4.6	2.2	0.5	0.2	2.0	84
0.04	6.4	4.8 ✓		0.9	0.8	78 ↑ L
0.06	18.4	8.0 ✓			3.0 ✓	79
0.23	2.2	1.6		0.7	2.0	80 ↓ R

DMEA-4732.

ASSAY MAP
MORNING MINE
Jefferson County, Montana
75 level

40 20 0 40 Feet.

June 1957 Overlay for plate III

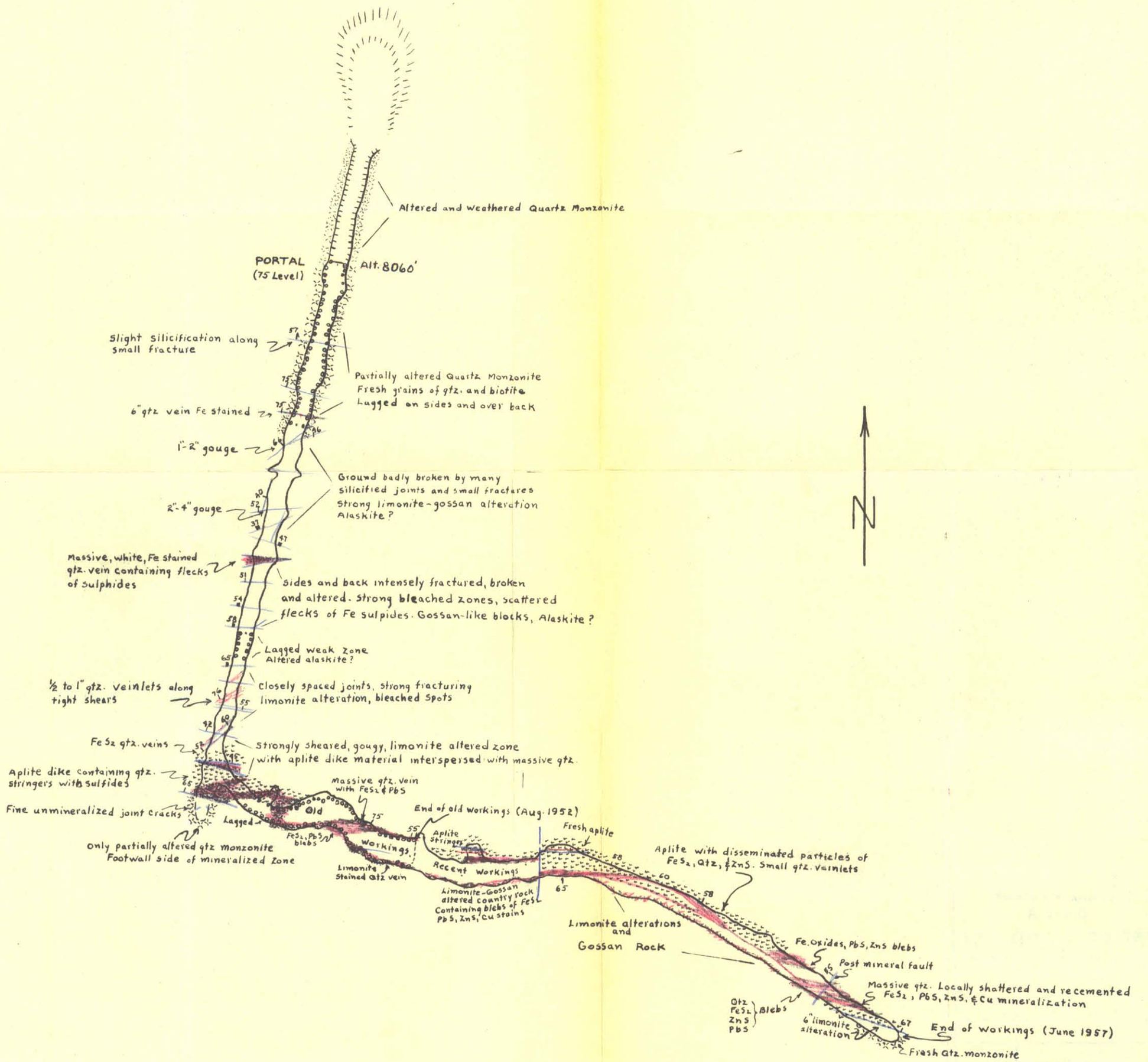

BASE MODIFIED FROM APPLICANTS MAP.
BY J.A. BOWSHER AND R.D. SAMPLE.

MORNING MINE
WESTERN AMERICAN OF MONTANA, INC.
Showing the 75 level
Sec. 18 T.7N. R. 5W. M.P.M. — JEFFERSON CO. MONT.

40 20 0 40 80 FEET.

JUNE 1957 PLATE III

DME 4732. Exploration Rpt.

UNITED STATES
DEPARTMENT OF THE INTERIOR

PREPARED FOR
DEFENSE MINERALS EXPLORATION ADMINISTRATION
EXAMINATION REPORT

Docket No. D.ME.A. 4732

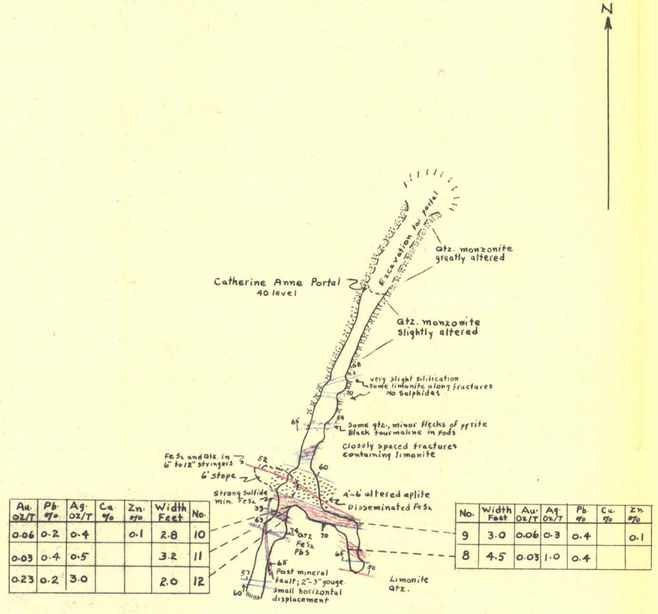

Au. oz/T	Pb %	Ag. oz/T	Cu %	Zn. %	Width Feet	No.
0.06	0.2	0.4		0.1	2.8	10
0.03	0.4	0.5			3.2	11
0.23	0.2	3.0			2.0	12

No.	Width Feet	Au. oz/T	Ag. oz/T	Pb %	Cu %	Zn %
9	3.0	0.06	0.3	0.4		0.1
8	4.5	0.03	1.0	0.4		

40 LEVEL and ASSAYS of MORNING MINE

0 20 40 60 80 100 ft.

PLATE IV A

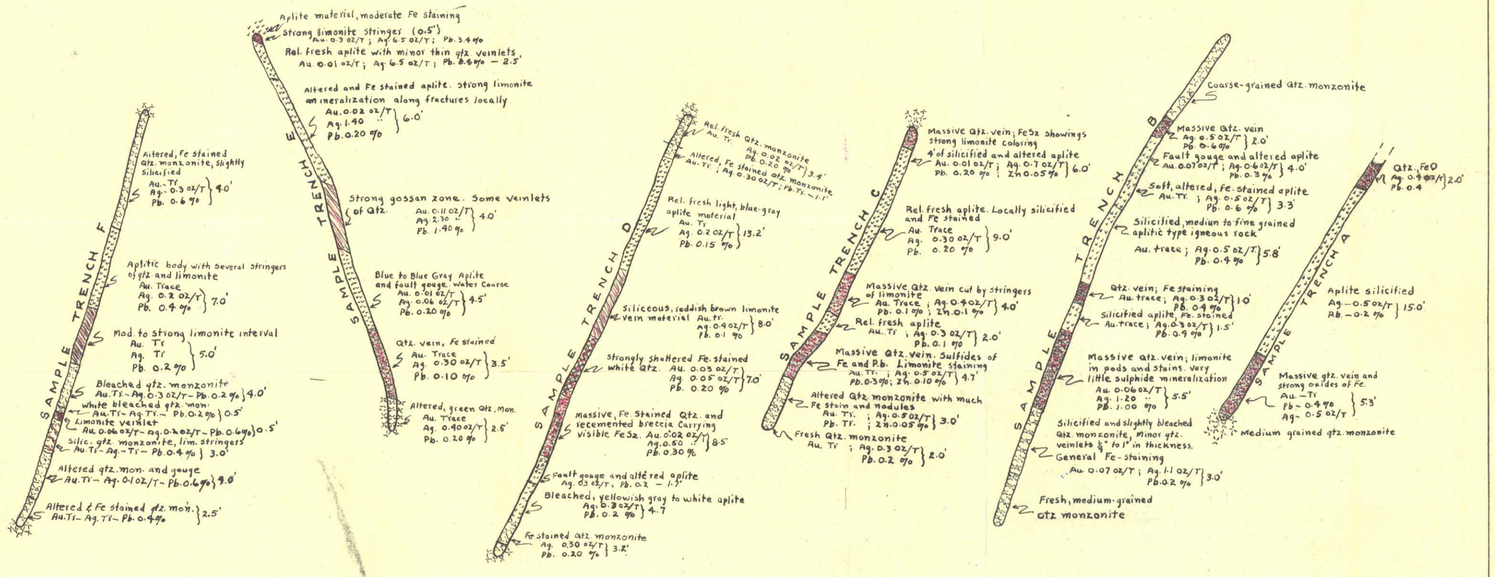

BULLDOZER CUTS and ASSAYS of MORNING MINE

0 10 20 30 40 50 ft.

Note:
Spacing of trenches on map not accurate
For correct spacing see Plate II

RDS & JAB June 1957

PLATE IV B

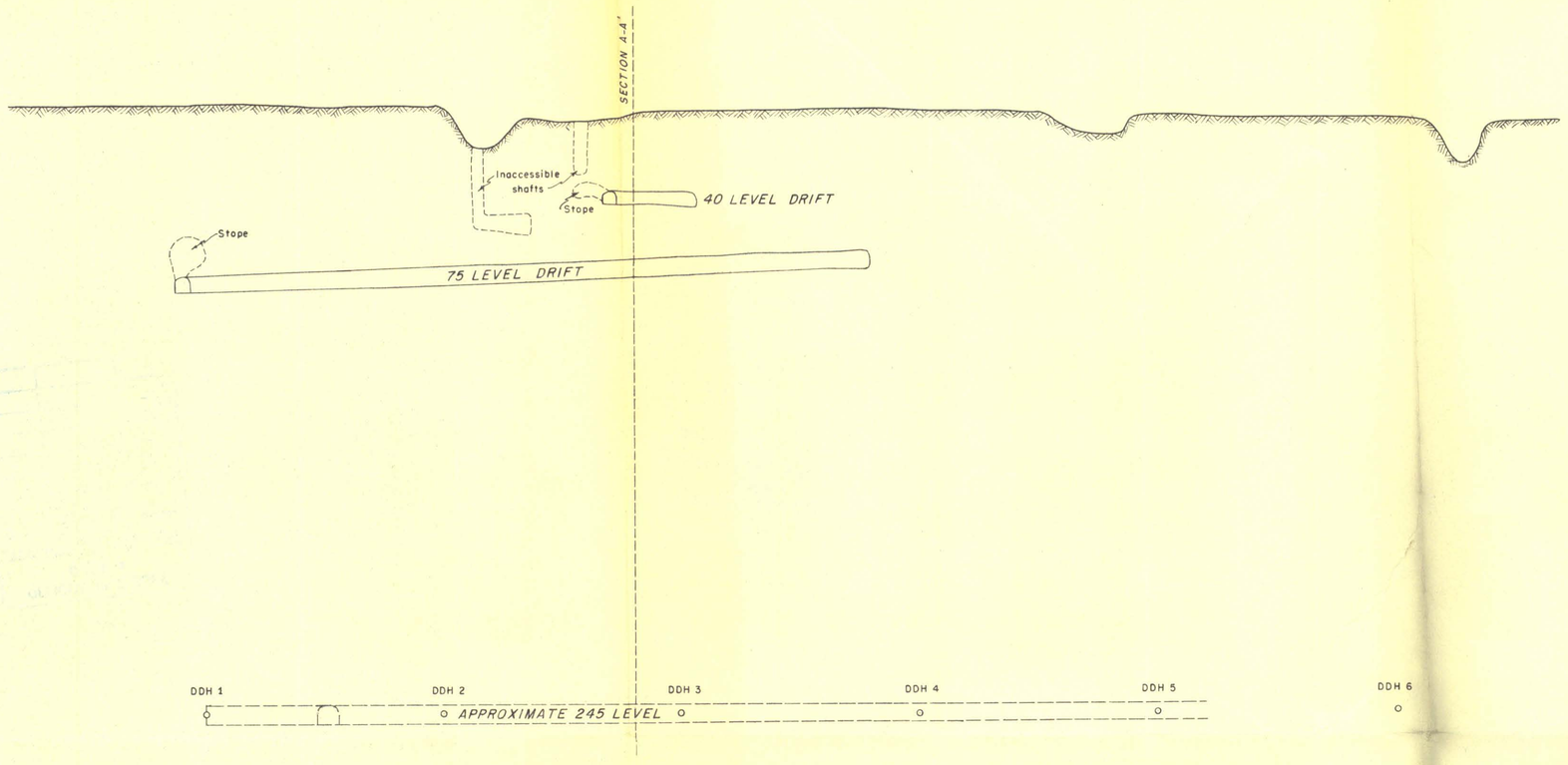

LONGITUDINAL SECTION ON THE PLANE OF THE VEIN

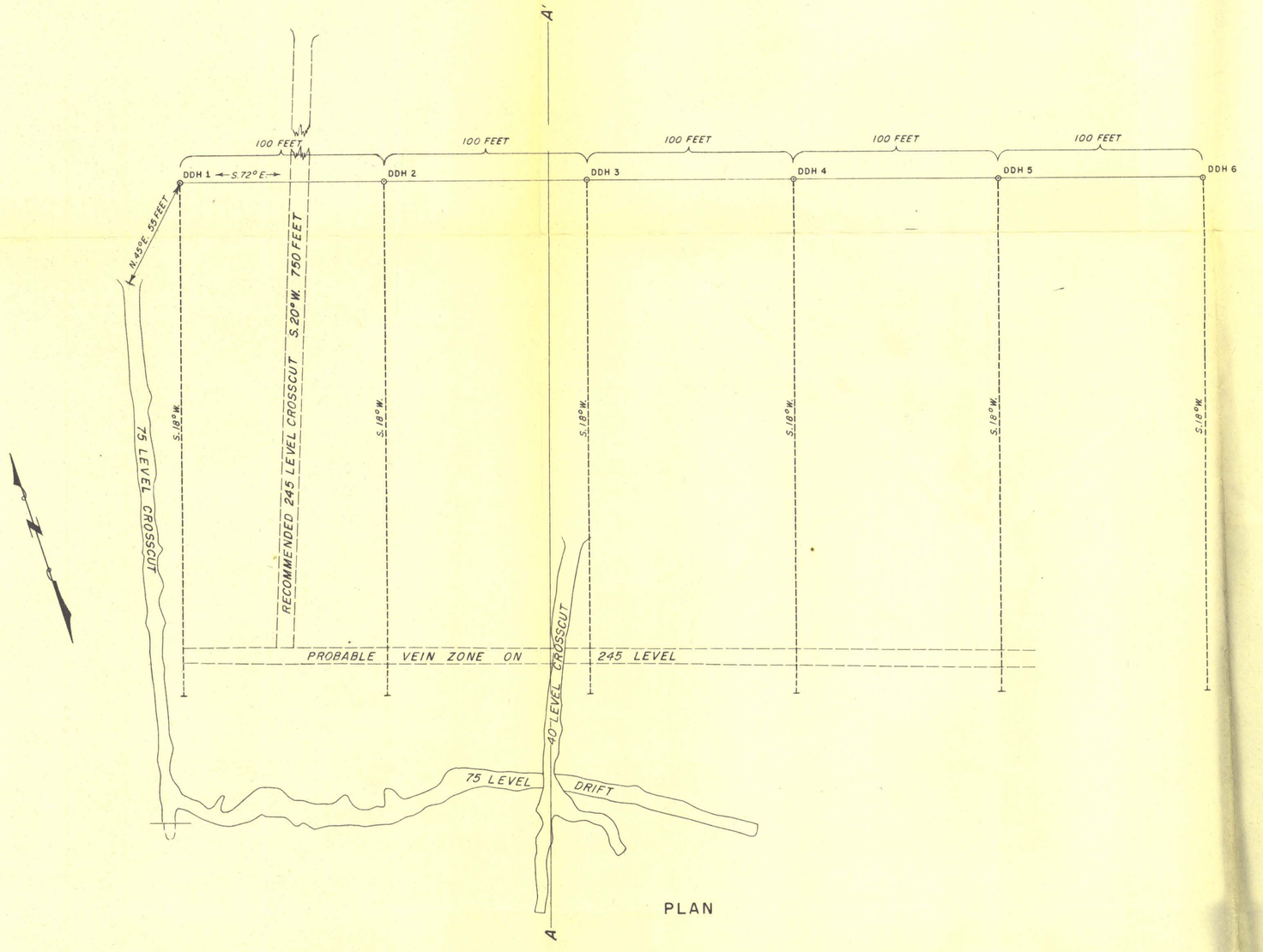

PLAN

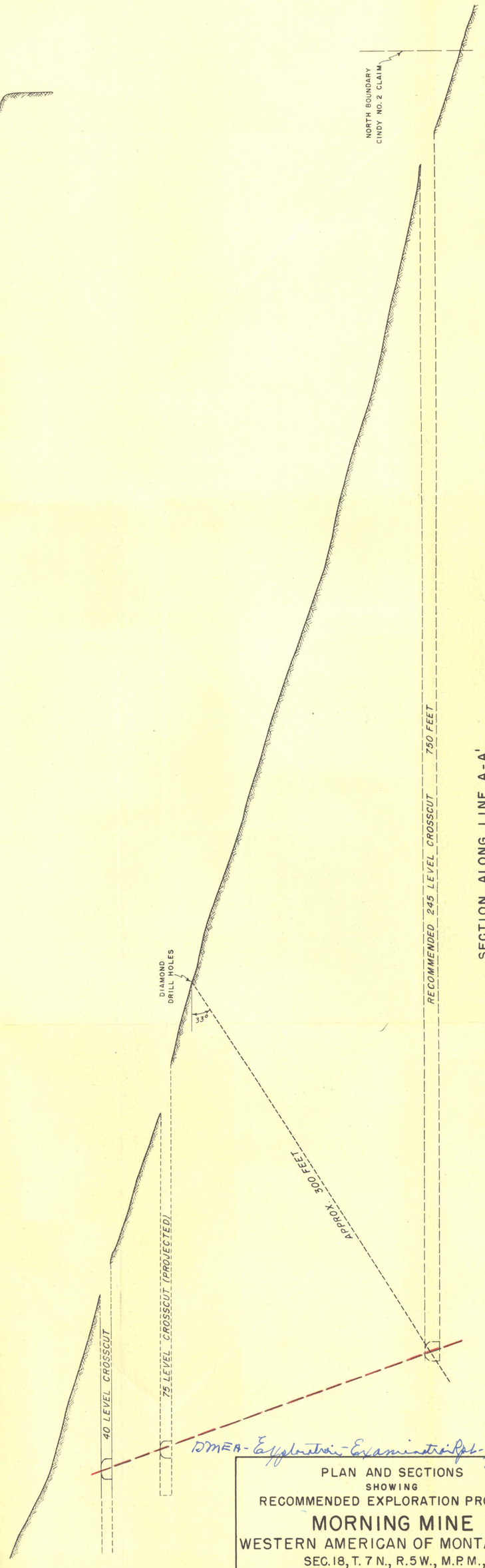

SECTION ALONG LINE A-A'

DMEA-Exploration-Examination Rpt-Docket No. 4732.

PLAN AND SECTIONS
SHOWING
RECOMMENDED EXPLORATION PROGRAM

MORNING MINE

WESTERN AMERICAN OF MONTANA, INC.
SEC. 18, T. 7 N., R. 5 W., M.P.M.,
JEFFERSON COUNTY, MONTANA

40 0 40 FEET

August, 1957 — By R. D. Sample — PLATE V

UNITED STA
DEPARTMENT OF THE I...ERIOR

PREPAR
DEFENSE MINERALS EXPL
EXAMINAT

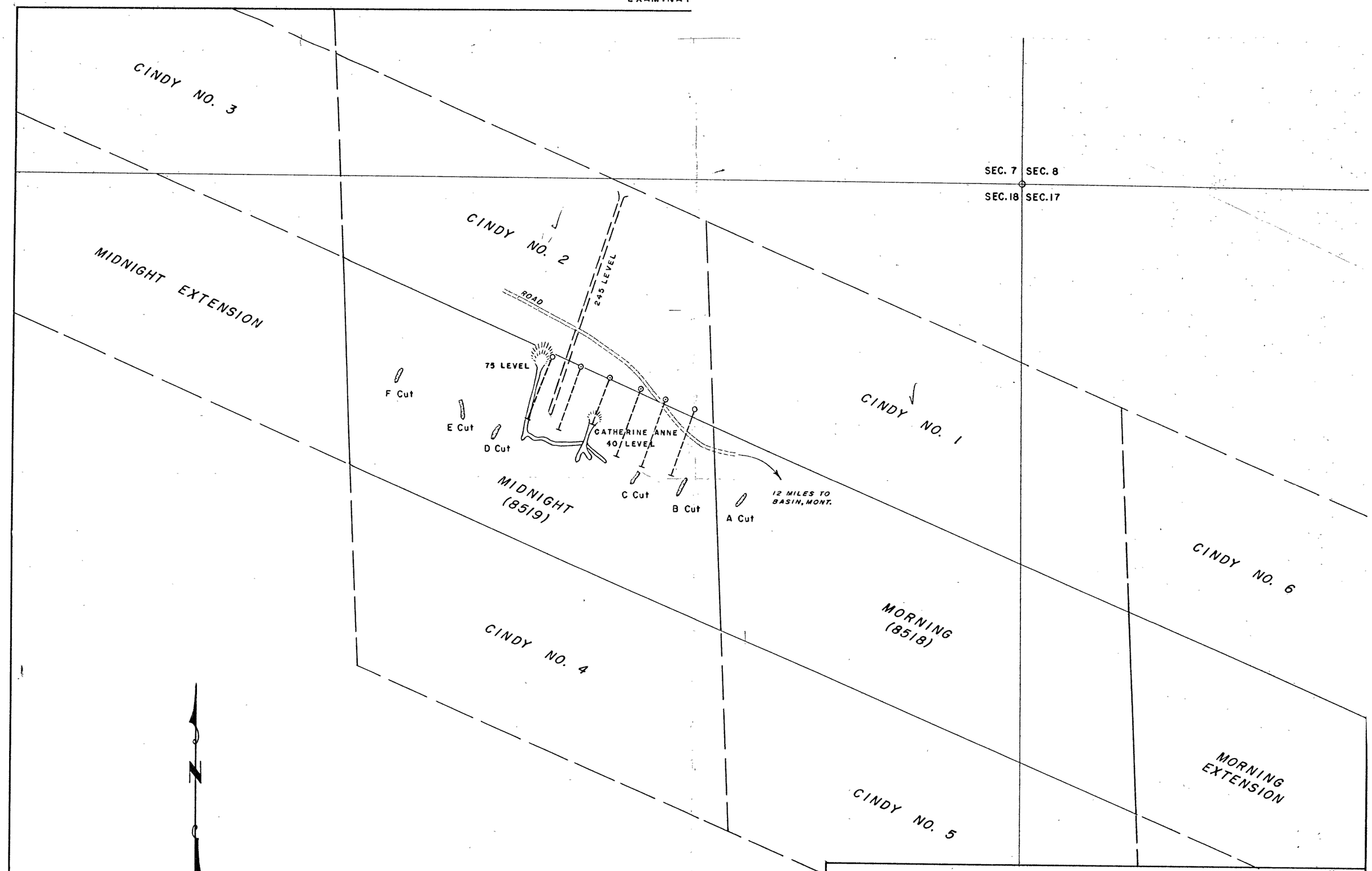

CLAIM MAP
SHOWING CATHERINE ANNE (40 LEVEL), 75 LEVEL, BULLDOZER CUTS, AND RECOMMENDED DIAMOND DRILL HOLES AND 245 LEVEL CROSSCUT

MIDNIGHT - MORNING PROPERTY

WESTERN AMERICAN OF MONTANA, INC.
T. 7 N., R. 5 W., M.P.M., JEFFERSON COUNTY, MONTANA

300 0 300 600 FEET

By R. D. Sample

August 1957 DMEA Examination, Rpt. DMEA-4732 PLATE II