UNITED STATES
DEPARTMENT OF THE INTERIOR
Defense Minerals Exploration Administration

OFFICIAL DOCKET FILE

Terminated [X] Cancelled [ ] Withdrawn [ ] DMEA No. 2310

This is the official contract file of a project closed without certification. It contains all official records of the project arranged in this manner:

Left Side

Certificate of Audit (Final).

Interim Audit(s).

✓ Report of Review.

✓ Closing Letter

✓ Termination Notice or Agreement.

Recision Notice.

Assignment of Contract.

Contract Amendments (latest on top).

✓ Contract with all exhibits and annexes.

Owner's Consent to Lien.

Subordination Agreement.

Leases and assignments of leases.

✓ Application and attachments.

Schedule of Collections.

✓ Operator's monthly reports and all attachments (latest on top).

Right Side

✓ Project summary.

✓ Work completed analysis.

All other material is filed in chronological order with correspondence including the following reports as checked:

✓ Final Field Team Report. (Tab)

Operator's Final Report.

✓ Interim Reports.

✓ On-Site Exam Report(s). (Tab)

Settlement Sheets.

If additional folders are required because of volume of records, show folder numbers and contents below:

Maps in folder number ____

Operator's Monthly Reports in folder number ____

HB

Reviewer's Initials and Date 3/13/57

10390

DEFENSE MINERALS EXPLORATION ADMINISTRATION
CONTRACT ADMINISTRATION AND AUDIT DIVISION

DEPARTMENT OF THE INTERIOR
Defense Minerals Administration
DEC 24 1952

REPORT OF REVIEW

I have reviewed the Monthly Reports of

Tungsten Prospecting Associates

2409 E. 19th Street

Long Beach 6, California

pertaining to Exploration Project Contract No. Idm-E-377, Docket No. DMEA-2310, for the period September 17, 1952 to October 22, 1952.

My review included an examination of the Monthly Reports (Form MP-104) and supporting documents attached thereto, comparison of the costs claimed with the contract and pertinent schedules, consultation with Government representative who visited and examined the project, and a determination of the reasonableness and propriety of the cost.

This review was made in lieu of an audit of the Operator's accounts and records for the following reasons:

a. the administrative cost to the Government of an audit would be excessive in relation to the estimated amount of possible disallowances thereunder;

b. the Monthly Reports were supported by documentary proof of the costs incurred under the contract;

c. major portion of costs covered labor ($692.00) and rental of equipment ($280.00);

The review disclosed the following facts in regard to the amount paid or to be paid the contractor:

Total cost as billed by Contractor	$1,676.27
Exceptions:	
Herewith (Schedule attached)	235.34
Total accepted cost	$1,440.93

The contract calls for a 75 per cent participation of exploration expenses by the United States Government. Therefore, payment to the contractor by the Government in the amount of One Thousand Eighty and 70/100 Dollars.

- $1,080.70

is considered valid and proper.

Date: December 17, 1952

George Mavor
George Mavor
Auditor

Defense Minerals Exploration Administration
1952

DEFENSE MINERALS EXPLORATION ADMINISTRATION
CONTRACT ADMINISTRATION AND AUDIT DIVISION

REPORT OF REVIEW

Tungsten Prospecting Associates

Schedule of Exceptions

(1)	Rental of Equipment claimed	$325.50	
	Less: Maximum allowed under contract	280.00	45.50
(2)	Insurance Premium for Public Liability and Property Damage not allowable cost under contract		189.63
(3)	Miscellaneous Supplies claimed	$ 22.45	
	Should have claimed per invoices	22.24	.21
	Total amount of exceptions		$235.34

FILE COPY
SURNAME:

UNITED STATES
DEPARTMENT OF THE INTERIOR
DEFENSE MINERALS EXPLORATION ADMINISTRATION
WASHINGTON 25, D. C.

Rutledge
Martin
Chamberlin

SW

JAN 1 6 1953

Mr. Herbert J. Kandel
Tungsten Prospecting Associates
2409 East 19th Street
Long Beach 6, California

Re: Docket No. DMEA 2310 - Tungsten
Tungsten Prospecting Associates
TPA No. 1 and TPA No. 2 Claims
San Bernardino County, California
Exploration Contract No. Idm-N377

Dear Mr. Kandel:

This is with reference to the subject exploration contract between Tungsten Prospecting Associates and the Government.

The final audit of the contract expenditures and the final reports of the Operator and the Field Team have been received and accepted by this Administration. Of the total amount of $1,830.00 approved under Stage I of the contract, total contract - $6,700.00, the amount of $1,440.93 was expended and the Government's share of 75 percent, or $1,080.70, was disbursed. There were no unused material, supplies, or equipment to be disposed of for the joint account of the Operator and the Government.

Although the results of the exploration project were unfavorable and the contract was terminated after completion of Stage I, the work was completed in a satisfactory manner. It is, therefore, not our intention to make any certification of discovery which would create a lien against the project property, and we are closing our books and records with respect to this project. Your attention is called, however, to Article 11 of the contract which requires the Operator to "keep and preserve his records and accounts for a period of three years after the completion or termination of this contract".

J.C. 1-16-53

Your interest in the Exploration Program of the Defense Minerals Exploration Administration and your willingness to participate therein are appreciated.

Sincerely yours,

C. O. Mittendorf (for)

Administrator

FARutledge/ls
1/14/53

CC: DOCKET
CODE 400
FIELD TEAM, REG. 3
ADMN. READ. FILE
D. M. LEMMON, USGS R. W. GEEHAN, USBM

UNITED STATES
DEPARTMENT OF THE INTERIOR
DEFENSE MINERALS ADMINISTRATION
WASHINGTON 25, D. C.

Government Copy
Washington
DEPARTMENT OF THE INTERIOR
Defense Minerals Administration
RECEIVED
DEC 8 1952

This notice was sent via
registered mail, return receipt requested,
to - Herbert J. Kandel, Tungsten Prospecting Associates,
2409 E. 19th St., Long Beach 6, Calif.

NOTICE OF TERMINATION OF EXPLORATION PROJECT CONTRACT, UNDER THE TERMS OF THE CONTRACT, BEFORE THE COMPLETION OF THE WORK.

To: Wendell F. Decker, Jerry R. Stevenson, Robert H. McKray, and Herbert J. Kandel, jointly and severally, doing business as Tungsten Prospecting Associates, 2409 E. 19th Street, Long Beach 6, California

Operator under Exploration Project
Contract Idm-E377, Docket DMEA-2310,
dated July 30, 1952.

The United States of America, acting through the Department of the Interior, Defense Minerals Exploration Administration, under the terms of the above-mentioned contract, hereby terminates the contract on the following grounds:

> In the opinion of the Government, operations under Stage I of the contract have not indicated the possibility of making any worthwhile discovery, and it is the opinion of the Government that approval to proceed with Stage II is not justified.

Upon the receipt of this notice, as provided in said contract, you are required to dispose of any remaining materials, supplies, facilities, buildings, fixtures, equipment, or other items, in which the Government has an interest, for the joint account of yourselves and the Government; and to render to the Government a full and final accounting of your operations under the contract and of your expenditures of money on account thereof.

Any work prosecuted or costs incurred by you after the receipt of this notice shall be for your sole account, except for (a) such necessary and reasonable costs and expenses as may be incurred in preserving and disposing of any facilities, buildings, fixtures, equipment, or other items, to the cost of which the Government has contributed and in which the Government has an equity, and (b) the costs of any reports, accounts, and winding-up and settlement actions provided for in the contract.

Dated this 3rd day of December, 1952.

UNITED STATES OF AMERICA

By H.C.Miller

H.C.Miller, Executive Officer
DMEA Field Team, Region III

3 CC Operating Committee, DMEA, Washington
1 CC A.C.Johnson, Reno
1 CC Finance Officer, Region III
E. H. Bailey, USGS
Geo. Mavor, DMEA, S.F.

(*b*) The Government's payme[illegible]all cases will be based on actual, neces[illegible]sts (including contract unit prices) incurred not in excess of any "allow[illegible]maximum," and not in excess of the fixed pe[illegible]e of the total aggregate estimated cost. Costs will be considered to be incurred only as they are or become due and payable.

(*c*) No items of general overhead, corporate management, interest, taxes (other than payroll and sales taxes) or any other indirect costs, or work performed or costs incurred before the date of this contract, shall be allowed as costs of the project in which the Government will participate.

ARTICLE 7. *Reports, accounts, audits.*—(*a*) *Progress reports.* The Operators shall provide the Government with monthly reports of work performed and costs (including contract unit prices) incurred under the contract, in quintuplicate (five copies), upon forms provided by the Government. These progress reports shall be certified by the Operator, and shall constitute both the Operator's invoice of costs incurred on the project during the period covered by the report and his voucher for repayment by the Government, unless the Government requires the use of a standard voucher form with invoice attached. Progress reports shall include surface and/or underground engineering-geological maps or sketches showing the progress of the exploration, with assay-reports on samples taken concurrently with the advance in mineralized ground.

(*b*) *Final report.*—Upon completion of the exploration work or termination of the contract the Operator shall provide the Government with an adequate geological and engineering report, in quintuplicate (five copies), including an estimate of ore reserves resulting from the exploration work.

(*c*) Compliance with requirements.—If, in the opinion of the Government, any of the Operator's reports are insufficient or incomplete, the Government may procure the making or completion of such reports and attachments as an expense of the exploration work; and the Government may withhold approval and payment of any vouchers depending upon insufficient or incomplete reports.

(*d*) *Accounts and audits.*—The Operator shall keep suitable records and accounts of operations, which the Government may inspect and audit at any time. The Government may at any time require an audit of the Operator's records and accounts by a certified public accountant, the cost thereof to be treated as a cost of the project. The Operator shall keep and preserve said records and accounts for at least 3 years after the completion of the project or the termination of this contract. Upon the completion of the project or termination of the contract the Operator shall render a final account as provided in Article 12.

ARTICLE 8. *Payments by the Government.*—(*a*) The Government will pay 75 percent of the allowable costs incurred, as they accrue, in an aggregate total amount not in excess of $5,025.00, which is 75 percent of $6,700.00, the agreed, estimated total cost of the project in which the Government will participate; *Provided*, that until the Operator's final report and final accounting have been rendered to the Government, and any final auditing required by the Government has been made, and a final settlement of the contract has been made, the Government may withhold from the last voucher or vouchers such sums as it sees fit not in excess of ten (10) percent of the maximum total which the Government might have been called upon to pay under the terms of the contract.

(*b*) The Government may make any payment or payments direct to independent contractors and to suppliers, for the account of the Operator, rather than to the Operator.

ARTICLE 9. *Repayment by Operator.*—(*a*) If, at any time, the Government considers that a discovery or a development from which production may be made has resulted from the exploration work, the Government, at any time not later than 6 months after the Operator has rendered the required final report and final account, may so certify in writing to the Operator. The certification shall describe broadly or indicate the nature of the discovery or development. In the event of such certification, any minerals mined or produced from the land described in Article 2 within 10 years from the date of this contract, including any mined or produced before the certification, shall be subject to a percentage royalty which the Operator or his successor in interest shall pay to the Government, upon the net smelter returns, the net concentrator returns, or other net amounts realized from the sale or other disposition of any such production, in whatever form disposed of, including ore, concentrates, or metal, until the total amount contributed by the Government, without interest, is fully repaid, or said 10 years have elapsed, whichever occurs first, as follows:

(1) One and one-half (1½) percent of any such net amounts not in excess of eight dollars ($8.00) per ton.

(2) One and one-half (1½) percent of any such net amounts, plus one-half (½) percent of such net amounts for each additional full fifty cents ($0.50) by which such net amounts exceed eight dollars ($8.00) per ton, but not in excess of five (5) percent of such net amounts.

(For instance: The percentage royalty on a net amount of five dollars ($5.00) per ton would be one and one-half (1½) percent; on a net amount of ten dollars ($10.00) per ton, three and one-half (3½) percent.)

(*b*) As here used, "net smelter returns," "net concentrator returns," and "other net amounts realized from the sale or other disposition," mean gross revenue from sales; or if not sold, the market value of the material after it is mined in the form in which and the place where it is held. In the case of integrated operations in which the material is not disposed of as such, these terms mean what is or would be gross income from mining operations for percentage depletion purposes in income-tax determination.

(*c*) To secure the payment of its percentage royalty, the Government shall have and is hereby granted a lien upon the land described in Article 2 and upon any production of minerals therefrom, until the royalty claim is extinguished by lapse of time or is fully paid.

(*d*) This article is not to be construed as imposing any obligation on the Operator or the Operator's successor in interest to engage in any mining or production operations.

ARTICLE 10. *Assignment, transfer, or loss of Operator's interest.*—Without the written consent of the Government, the Operator shall not assign or otherwise transfer or hypothecate this contract or any rights thereunder. The Operator shall not make any voluntary nor permit any involuntary transfer or conveyance of the Operator's rights in the land described in Article 2, without making suitable provision for the preservation of the Government's right to a percentage royalty on production and lien for the payment thereof; *Provided*, that mere failure by the Operator to maintain the Operator's rights in the land, without any consideration running to the Operator other than relief from the cost of maintaining such rights (as by surrender of a leasehold, failure to perform assessment work, or failure to exercise an option), coupled with complete abandonment by the Operator of all interest in or operations on the land for a period of 10 years from the date of this contract, shall not constitute such a transfer or conveyance. Should the Operator make or permit any transfer or conveyance in violation of this provision, the Operator shall be and remain liable for payment to the Government of the same amounts, at the same times, as would have been paid under the terms of the percentage royalty on production. If for any reason the net smelter returns, net concentrator returns, or other net amounts realized from the sale or other disposition of such production are not available as a means of measuring the amount of the Operator's liability, the amount thereof shall be estimated as well as may be, and in the event of dispute as to such estimates, the determination thereof by the Administrator of Defense Minerals Exploration Administration or by his successor shall be final and binding upon the Operator.

ARTICLE 11. *Title to and disposition of property.*—All facilities, buildings, fixtures, equipment, or other items costing more than $50.00 each, paid for or purchased with funds contributed jointly by the Operator and the Government, although title may be taken in the name of the Operator, shall belong to the Operator and the Government jointly, in proportion to their respective contributions, and upon the completion of the work or the termination of the contract shall be disposed of promptly by the Operator for the joint account of the Government and the Operator, either by return to the vendor, by sale to others, or purchase by the Operator at a price at least as high as could otherwise be obtained, as may appear to be for the best interest of the Government, unless the Government, in writing, waives its interest in any such item. If necessary to accomplish such disposition, the Operator shall dismantle, sever from the land, and remove any such item, the cost thereof to be for the joint account of the parties in proportion to their respective interests. If the Operator, within 90 days after the receipt of written notice from the Government, fails, neglects, or refuses to dispose of such property, the Government may itself enter upon the land, take possession of, and remove and dispose of any such property as above provided.

ARTICLE 12. *Termination and completion.*—The Government may, at any time, by written notice to the Operator, terminate this contract: (*a*) If the Operator fails to provide his share of the money necessary to prosecute operations pursuant to the terms of the contract; (*b*) if the Operator, in the opinion of the Government, fails to prosecute operations pursuant to the terms of the contract; or (*c*) if in the opinion of the Government, operations up to the time of the notice have not indicated the probability of making any worth while discovery and in the opinion of the Government further operations are not justified. Upon the completion of the project or any termination of the contract the Operator shall dispose of any remaining materials, supplies, facilities, buildings, fixtures, and equipment in which the Government has an interest, for the joint account of the Operator and the Government in the proportion of their respective interests; shall render to the Government a full and final accounting of his operations under the contract and his expenditures of money; and shall pay to the Government its pro rata share of any money remaining.

ARTICLE 13. *Changes and added provisions.* The Operator's obligation to bring the project to completion continues only as long as the accumulated allowable costs of the project in which the Government will participate do not exceed the agreed, total estimated cost of the project set forth in Article 8.

Executed in sextuplicate the day and year first above written.

TUNGSTEN PROSPECTING ASSOCIATES

W. F. Deeter (~~Operator~~) H. J. Kandel

J. R. Stevenson R. H. McKray

THE UNITED STATES OF AMERICA

By

Acting Administrator
Defense Minerals Exploration Administration

I, , certify that I am the secretary of the corporation named as Operator herein; that , who signed this contract on behalf of the Operator, was then of said corporation; that said contract was duly signed for and in behalf of said corporation by authority of its governing body, and is within the scope of its corporate powers.

[CORPORATE SEAL]

MF-200
(June 1951)
(Revised Feb. 1952)

DEPARTMENT OF THE INTERIOR
BUREAU OF MINES
REGION III
RECEIVED

DOCKET NO. [redacted]A 2310

COMMODITY Tungsten

Idm-E377
Government's Copy

UNITED STATES OF AMERICA
DEPARTMENT OF THE INTERIOR
DEFENSE MINERALS EXPLORATION ADMINISTRATION

AUG 1 AM 8 50
SAN FRANCISCO, CALIFORNIA

EXPLORATION PROJECT CONTRACT[1]

IT IS AGREED this 30th day of July, 1952, between the United States of America, acting through the Department of the Interior, Defense Minerals Exploration Administration, hereinafter called the "Government," and[2] Wendell F. Deeter, Jerry R. Stevenson, Robert H. McKray and Herbert J. Kandel, jointly and severally, doing business as Tungsten Prospecting Associates, 2409 E. 19th Street, Long Beach 6, California

hereinafter called the "Operator," as follows:

ARTICLE 1. *Authority for contract.*—This agreement is entered into under the authority of the Defense Production Act of 1950, as amended, pursuant to DMEA Order 1 entitled "Government Aid in Defense Exploration Projects."

ARTICLE 2. *Operator's property rights.*—With respect to that certain land situated in the State of California, County of San Bernardino, described as follows:[3] TPA No. 1 and TPA No. 2 unpatented lode mining claims located in the NW¼ of the NW¼ of Section 13, T. 2 N., R. 2 E. (projected), San Bernardino Meridian recorded in the mining records of San Bernardino County, California Book 322 p. 464, and Book 324, p. 447, respectively.
the Operator represents and undertakes:[4]

(*a*) That the Operator is the owner, in possession and entitled to possession, and that the property is subject only to the following claims, liens, or encumbrances as to each of which the subordination agreement of the holder is attached: None

~~(b) That the Operator is the owner, in possession and entitled to possession, and that the property~~
The Operator shall devote the land and all existing improvements, facilities, buildings, installations, and appurtenances to the purposes of the exploration project without any allowance for the use, rental value, depreciation, depletion, or other cost of acquiring, owning, or holding possession thereof.

ARTICLE 3. *Exploration project.*—The Operator, within thirty (30) days from the date of this contract shall commence work on a project of exploration for[5] tungsten

in or upon the described land; and shall bring the project to completion within a period of four (4) months from the date of this contract. The work to be performed is more fully described in Exhibit "A" attached hereto, which, with any maps or drawings thereto attached, are made a part of this contract. The Government will contribute to the cost of this work as hereafter provided.

ARTICLE 4. *Performance of the work.*—(*a*) *Operator's responsibility.* The work shall be performed efficiently, expertly, in a workmanlike manner, in accordance with good mining standards and State regulations for health and safety and for workmens' compensation and employers' liability insurance, with suitable and adequate equipment, materials, and labor, to bring the project to completion within the time fixed. To the extent specified in Exhibit "A," attached hereto, the work may be performed by independent contractor or contractors; and work not specified in Exhibit "A" for performance by independent contractor may nevertheless be so performed upon amendment of Exhibit "A," as agreed to by the parties, to state the work to be so performed and the estimated unit costs thereof, as provided hereafter.

(*b*) *Independent contracts.*—Any independent contract for the performance of work shall be on a unit-price basis (such as per foot of drilling, per foot of drifting, per hour of bulldozer operations, per cubic yard of material moved), or on some basis that will indicate the amount due for work performed at any stage of the work to be performed under such independent contract. The Government shall not be nor be considered to be a party to any such independent contract, and the Government's right to terminate the exploration project contract under any of its provisions shall not in any manner be affected by reason of any such independent contract. If the reference in Exhibit "A" to any such independent contract states that the Government's approval thereof is required, the Government may refuse to participate in the cost thereof unless and until it has given its written approval of the independent contract.

(*c*) *Government may inspect.*—The Government shall have the right to enter and observe and inspect the work at all reasonable times, and the Operator shall provide the Government with all available means for doing so. The Government may consult with and advise the Operator on all phases of the work.

ARTICLE 5. *Estimated costs of the project.*—A statement of the estimated cost of the project is set forth in Exhibit "A," attached hereto. Except insofar as any item of requirement or the estimated cost thereof set forth in Exhibit "A" is there or elsewhere designated as an "allowable maximum," such items of requirement and of related cost are estimates only, and may be exceeded to the extent that the Government may from time to time approve for the most economic and beneficial performance of the work within the limitation of the total aggregate estimate of costs. The Government's approval of any such excess over the estimate for an item of requirement or related cost will be signified by its approval and payment of any invoice or voucher for payment which expressly calls attention to such excess. Items expressly designated in Exhibit "A" or elsewhere as "allowable maximum," and the total aggregate estimated cost are limitations, and any excess therein will be for the sole account of the Operator in which the Government will not participate.

ARTICLE 6. *Allowable costs of the project.*—(*a*) The costs of the project in which the Government will participate are limited to the following:

(1) *Independent contracts.*—Payments to independent contractors under independent contracts listed in Exhibit "A." The estimated cost of any work to be performed under an independent contract is or shall be included in the estimate of costs in Exhibit "A" in terms of the estimated numbers of units of work to be performed, the estimated amount to be paid per unit, and the estimated total amount to be paid to the independent contractor, and such estimates shall be allowable maximums above which the Government will not contribute. Regardless of the provisions of any such independent contract, the Government will participate in the payments to the independent contractor only on account of work actually performed and that conforms with the provisions of the exploration project contract, and only to the extent that the Government deems the unit prices for the work under the independent contract to be reasonable and necessary. No such independent contract shall have the effect of increasing the estimated total cost of the exploration project contract nor the maximum amount which the Government will pay as provided in the exploration project contract.

(2) *Labor, supervision, consultants.*—Labor, supervision and technical services (including engineering and geological consultants), a schedule of which is included in the estimate of costs set forth in Exhibit "A." The requirements and related estimated costs for supervision and technical services are allowable maximums.

(3) *Operating materials and supplies.*—Necessary materials and supplies including items of equipment costing less than $50.00 each, and power, water, and fuel, a schedule of which is included in the estimate of costs in Exhibit "A."

(4) *Operating equipment.*—Any operating equipment to be rented or purchased, or which is owned and will be furnished by the Operator, with the estimated rental, purchase price, or the allowable depreciation, as the case may be, a schedule of which is included in Exhibit "A." Any items listed as owned and to be furnished by the Operator, and related ~~initial~~ allowable depreciation, are allowable maximums.

(5) *Rehabilitation and repairs.*—Any necessary initial rehabilitation or repairs of existing buildings, installations, fixtures, and movable operating equipment, now owned by the Operator and to be devoted to the purposes of the exploration contract, a schedule of which is included in the estimate of costs set forth in Exhibit "A." These items are allowable maximums.

(6) *New buildings, improvements, installations.*—Any necessary buildings, fixed improvements, or installations to be purchased, installed, or constructed for the purposes of the exploration work, with the estimated cost of each, a schedule of which is included in the estimate of costs in Exhibit "A." All of these items are allowable maximums.

(7) *Miscellaneous.*—Repairs to and maintenance of operating equipment (not including initial rehabilitation or repairs of the Operator's equipment), analytical work, accounting, workmen's compensation and employers' liability insurance and payroll taxes.

(8) *Contingencies.*—Such other necessary, reasonable direct costs of performing the exploration work, within the limit of the total aggregate estimate of costs, whether or not included in any schedule of costs in Exhibit "A," as may be approved by the Government in the course of the work, as indicated by its approval and payment of invoices and vouchers.

[1] If sufficient space is not provided in any blank, use an extra sheet of paper and refer to it in the blank.
[2] State name, address, and nature of organization if any.
[3] Give legal description or enough to identify the property, particularly excluding any land or interest therein to which the Government's lien is not to attach or the production from which is not to be subject to the Government's percentage royalty.
[4] Strike out the provision not applicable.
[5] Name of mineral or minerals.

TUNGSTEN PROSPECTING ASSOCIATES
EXPLORATION PROJECT CONTRACT
TPA NO. 1 and NO. 2 CLAIMS
DOCKET NO. DMEA-2310

EXHIBIT "A"

Description of the Work

Stage I

Time Schedule: 0 - 1 month

This work will consist of 8 trenches to be cut at intervals of approximately 25 feet along the mineralized zone (Plate 1, attached hereto and made a part hereof). The trenches will be 10 to 15 feet in length, approximately 3 feet in width and 3 feet in depth in the mineralized zone.

Samples will be taken concurrently with the progress of the work. Approximately 3 samples will be taken from the bottom of each trench in a manner agreeable to the Government. Each sample shall be crushed and quartered and a representative part of the sample shall be furnished the Government.

Stage II

Time Schedule: 1 - 3 months

Stage II will be dependent upon the results obtained from Stage I. This work will be undertaken only after the completion of Stage I to the satisfaction of and approval by the Government.

This work will consist of approximately 50 feet of shaft sinking and 40 feet of drifting. The location of the shaft will be definitely determined after the completion of Stage I, subject to the approval of the Government.

The shaft and drifts will be sampled at 5 foot intervals concurrently with the progress of the work. These samples shall be taken in a manner agreeable to the Government. Each sample shall be crushed and quartered and a representative part of the sample shall be furnished the Government.

Estimated Cost of the Project
(*Indicates allowable maximum)

(1) Independent Contracts

Stages I and II

None

(2) Labor, Supervision, Consultants

Stage I

1 Working foreman[1] @ $18.00/day, 20 days	$ 360.00*	
1 Miner @ $15.00/day, including overtime, 18 days	270.00	
1 Mucker @ $14.00/day, including overtime, 18 days	252.00	$ 882.00*

Stage II

1 Working foreman[1] @ $18.00/day, 40 days	720.00*	
2 Miners @ $15.00/day, including overtime, 40 days	1,200.00	
1 Hoistman @ $15.00/day, including overtime, 40 days	600.00	
1 Consultant[2] 3 days @ $60.00/day	180.00*	2,700.00*

(3) Operating Materials and Supplies

Stage I

Fuel oil, gasoline, oil, powder, fuse, caps, tools, steel, bits, etc.	150.00

1/ The foreman will cut samples in a manner acceptable to the Government.

2/ Consultant is to assist in making final report and maps.

Stage II

Fuel oil, gasoline, oil, powder, fuse, caps, tools, steel, bits, etc.	$ 400.00	
Timber, 1,000 board feet @ $125.00/M	125.00	
Bolts, sheave wheel, etc. for headframe	100.00	
2 1,000 pound capacity buckets @ $75.00/each	150.00	
Pipe and fittings	75.00	$ 850.00

(4) Operating Equipment

Stage I

To be purchased

None

To be rented

1 105 cu. ft. air compressor, $160.00/mo., 1 month	160.00	
1 Jackhammer with accessories, $20.00/mo., 1 month	20.00	
1 Pickup truck, $100.00/mo., including upkeep, 1 month	100.00	280.00*

To be furnished by Operator

None

Stage II

To be purchased

None

To be rented

1 105 cu. ft. air compressor, $160.00/mo., 2 months	320.00

1 Jackhammer with accessories, $20.00/mo., 2 months	$ 40.00	
1 Pickup truck, $100.00/mo., including upkeep, 2 months	200.00	
1 Hoist, $50.00/mo., 2 months	100.00	$ 660.00*

To be furnished by Operator

None

(5) Rehabilitation and Repairs

Stages I and II

None

(6) New Buildings, Improvements, Installations

Stage I

Tool shed		200.00

Stage II

Installing hoist	50.00	
Installing headframe	50.00	100.00

(7) Miscellaneous

Stage I

Repairs	50.00	
Assaying, 25 samples @ $4.00/each	100.00	
Accounting	20.00	
Compensation Insurance, Social Security, Unemployment Insurance, etc.	108.00	
Sample sacks	5.00	283.00

Stage II

Repairs	60.00	
Assaying, 20 samples @ $4.00/each	80.00	

	Accounting	$ 40.00	
	Compensation Insurance, Social Security, Unemployment Insurance, etc.	310.00	
	Sample sacks	5.00	$ 495.00
(8)	Contingencies		
	Stage I	35.00	
	Stage II	65.00	100.00
	Total Cost of Project		$6,700.00*

S U M M A R Y

Total cost of Stage I	$1,830.00*	
Total cost of Stage II	4,870.00*	
TOTAL COST OF PROJECT		$6,700.00*
GOVERNMENT PARTICIPATION @ 75%		$5,025.00*

UNITED STATES DEPARTMENT OF THE INTERIOR
GEOLOGICAL SURVEY

DMEA 2310
(TUNGSTEN)

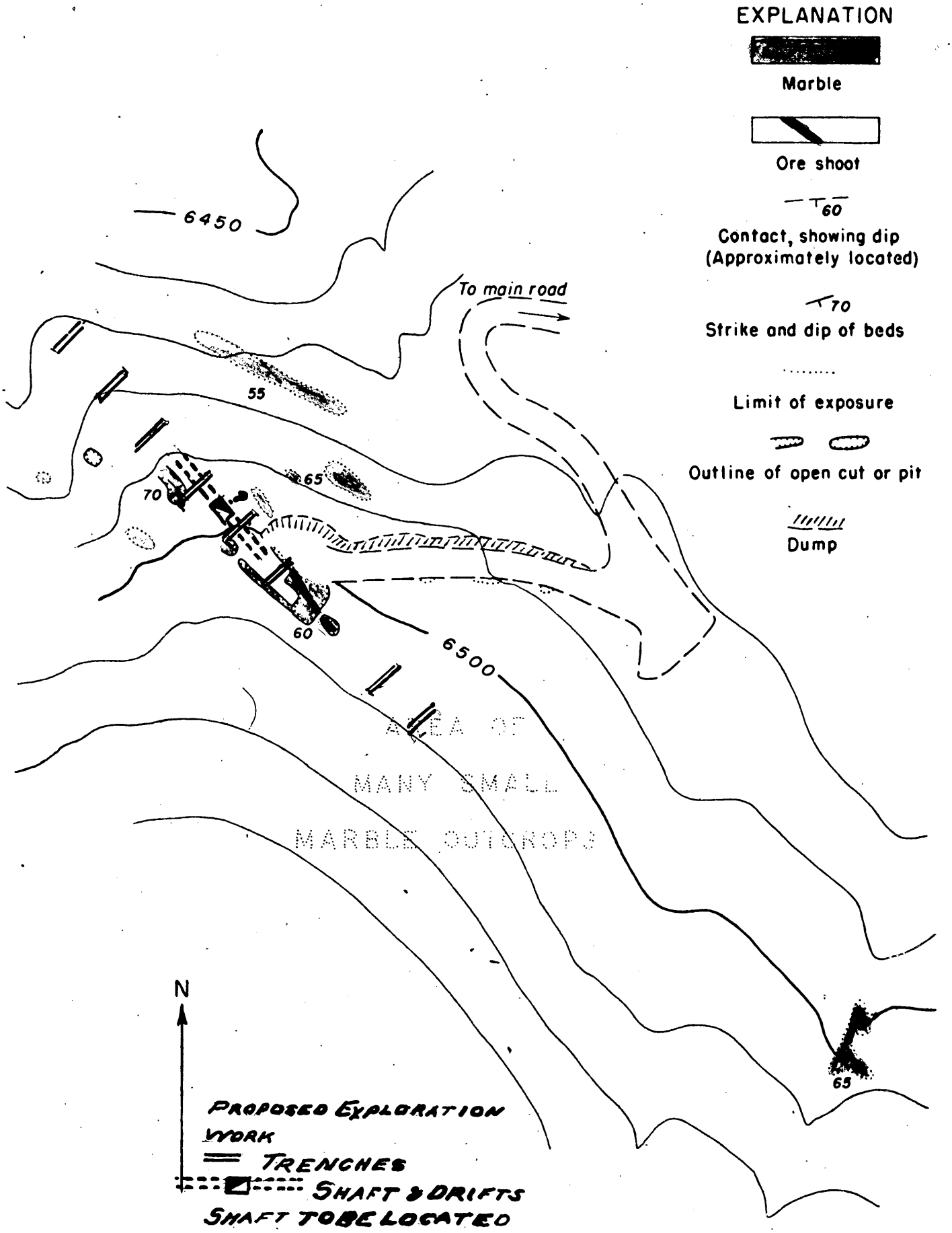

PLATE NO. 1

Mapped by W. P. Irwin and L.D. Clark
February 28, 1952

Tungsten Prospecting Associates Claim No. 1, San Bernardino County, California

0 50 100 150 Feet

Contour interval 10 feet

Form MF-103
(Revised June 1951)

UNITED STATES DEPARTMENT OF THE INTERIOR
DEFENSE MINERALS ADMINISTRATION

Budget Bureau No. 42-R1035.1.

MF-103 Should Be Filed With General Technical Data Form MF-100

APPLICATION FOR AID FOR AN EXPLORATION PROJECT PURSUANT TO MINERAL ORDER 5, UNDER DEFENSE PRODUCTION ACT OF 1950

Not To Be Filled in by Applicant

Docket No. Dmea - 2310
Metal or Mineral
Date Received 1/2/52
Amount $
Participation (Government %)

DEPARTMENT OF THE INTERIOR
Defense Minerals Administration
RECEIVED
JAN 2 - 1952

Tungsten Prospecting Associates
H.J. Kandel
2409 E 19th Street
Long Beach 6, Calif.

Name and address of applicant

Date Dec. 24, 1951

If you have already filed MF-100, give date filed MF-100 Accompanys, type of assistance requested tungsten loan,

DMA Docket Number (if available) Not available

INSTRUCTIONS

Read Mineral Order 5, Regulations Governing Government Aid in Defense Projects, before completing this application. Submit four copies each, of the signed application form, General Technical Data Form MF-100, and answers to questions as specified, to Defense Minerals Administration, Department of the Interior, Washington 25, D. C., or to the nearest field executive office thereof, with your name and address on each sheet of the application and all accompanying papers. If you have previously filed MF-100, it is not necessary to file it again. However, you should indicate in space provided above the type of assistance previously applied for (loans, procurement contracts, etc.) and DMA Docket Number, if available. *When a question is inapplicable it should be so stated in the form.* Additional sheets should be attached in answering any questions or in supplying additional information. IF YOU CANNOT ANSWER A QUESTION, SO STATE.

1. (*a*) Give a description of the real property that will be in any way involved in the exploration project, including any existing mine or operating property.

   (*b*) If you are not the owner of the property, submit a copy of the lease, purchase option, or other agreements under which you are authorized to operate the property with each copy of your application.

   (*c*) Give the legal description of the exact parcel, plot, or area upon which the exploration is to be conducted.

   NOTE: (1) If both areas are the same, so state. The only obligation to repay the Government is from the net earnings from any commercial discovery made in the area specified in (*c*) above in which the exploration is to be conducted, and the expenditure of funds which may be charged as costs of the project must be limited to that area or to work necessary to perform the exploration in that area.

   (2) If applicant is not the owner of the property or if there are any liens or encumbrances against the property, copy of agreements of claimants, lienors, encumbrances, and lessors subordinating their interests in the property to the interest of the Government under the Exploration Project Contract will be required for attachment to the Contract.

2. (*a*) What metals or minerals do you expect to find?

   (*b*) Furnish statement of the geologic features of your property, giving type of ore deposit and reasons for expecting to find commercial ore bodies. Illustrate with maps or sketches. If you have a geologic or engineering report, or assay maps showing width and grade, please send them with application, stating whether or not you wish to have them returned.

The information requested in questions 3, 4, 5, 6, 7, 8, and 9 below should be answered specifically and in detail, as this information will be attached to and incorporated as part of the Exploration Project Contract, if such contract is entered into with you by the Government.

ANSWER EACH QUESTION ON SEPARATE SHEETS OF PAPER AND SUBMIT A COPY OF EACH ANSWER FOR EACH COPY OF YOUR APPLICATION.

3. (*a*) Describe fully the proposed work and give the total cost of the project.

   (*b*) State the time required to start the project and to complete it.

4. Submit a map or sketch of the property involved showing a plan (and cross section, if needed) of the present mine workings and the *location of the proposed exploration work* as related to geologic features, such as contacts, veins, ore-bearing beds, etc.

5. Furnish an itemized list of existing facilities, buildings, installations, and fixtures with a statement of the cost of any necessary rehabilitation or repairs to put into useful and operable condition.

6. Furnish a detailed list of additional facilities, buildings, and fixtures to be purchased, installed, or erected by you, with the estimated cost of each item.

7. Furnish a detailed list of operating equipment, separated into items to be—

   (*a*) Rented

   (*b*) Purchased

   (*c*) Furnished by you

   with the rental, purchase price, or depreciation of each item, as the case may be, to be charged as a cost of the project.

8. Furnish an itemized schedule of labor, by numbers and classes (miners, muckers, etc.) and of supervisors by numbers and positions, with the maximum wages or salaries to be paid to each.

9. Furnish a detailed list with estimated cost of each item for materials, supplies, engineering, assaying, accounting, power, water, utilities, and any other items not provided for above.

10. (*a*) How much are you prepared to invest in the proposed project?

    (*b*) Is this amount sufficient to pay your part of the cost of the project, in accordance with the regulations on Government participation (Sec. 9 of MO–5)?

11. State any conditions or circumstances regarding the property not sufficiently brought out by the foregoing questions.

CERTIFICATION

The undersigned company, and the official executing this certification on its behalf, hereby certify that the information contained in this form and accompanying papers is correct and complete to the best of their knowledge and belief.

Tungsten Prospecting Associates
(Name of company)

By Herbert J. Kandel
(Signature of authorized official)
Herbert J. Kandel

Dec. 24, 1951
(Date)

Secretary
(Title)

Title 18, U. S. Code (Crimes), Section 1001, makes it a criminal offense to make a willfully false statement or representation to any department or agency of the United States as to any matter within its jurisdiction.

U. S. GOVERNMENT PRINTING OFFICE 16—64067-2

BOOK 322 PAGE 464 Notice of Location

(SECTS. 2301 TO 2324, PUBLIC RESOURCES CODE)

TO WHOM IT MAY CONCERN: *Please take notice that:*

1. *The name of this claim is the* T. P. A. #1 X *Lode Mining Claim. Said claim is situated in the* Round Valley *Mining District, County of* San Bernardino, *State of* California *Located this* 6th *day of* October, *19* 51. *This discovery is made and the original notice posted this* 6th *day of* October, *19* 51.

2. *That the undersigned locators are citizens of the United States or have declared their intention to become such, and have discovered mineral bearing rock in place thereon and do locate and claim same for mining purposes.*

3. *That the number of linear feet in length along the course of the vein each way from the point of discovery whereon we have erected a monument, is* N. Westerly 900 *feet;* S. Easterly 600 *feet; that the total length does not exceed 1500 feet. That the width on the* Northerly *side is* 300 *feet; that the width on the* Southerly *side is* 300 *feet; that the total width does not exceed 600 feet, that the end lines are parallel; that the general course of the vein or lode as near as may be, is in a* N. Westerly *and* S. Easterly *direction; that the boundaries of this claim may be readily traced, and are defined as follows, to-wit:*

COMMENCING at Discovery Monument *in a* N. Westerly *direction from the discovery monument,* 900 *feet therefrom,* Thence Southwesterly 300 feet to the west corner monument, thence 1500 feet in a southeasterly direction to the south corner monument, thence 600 feet in a northeasterly direction to the east corner monument, thence 1500 feet northwesterly to the north corner monument.

4. *That the date of this location is the* 6th *day of* October, *19* 51.

5. *That this claim can be identified by its proximity to the following natural object or permanent monument, to-wit:* It is located approximately 3-1/2 miles east of Baldwin Lake, and approximately 5 miles by road southeast of turnoff at Highway 18, and Rose Mine Road.

This notice is intended as an original notice of location and is posted on this claim and a true copy thereof is to be recorded with the County Recorder of this County.

That all the dips, variations, spurs, angles and all veins, ledges, or deposits within the lines of this claim, together with all water and timber and any other rights appurtenant, allowed by the law of this State or of the United States are hereby claimed.

LOCATORS

Kendall Keister X	5838 Faculty Ave., Bellflower
J. R. Stevenson X	LaHabra Heights, Calif.
R. H. McKeen X	2409 E. 19th St., Long Beach

WITNESSES

Merlin J. Kendall	2409 E. 19th St., Long Beach

The exterior boundaries of a Lode Claim cannot be limited by any local mining regulation to less than 25x1500 feet, measuring from the center of vein on either side.

PUB. RES. CODE 2313, within ninety days after the posting of this notice of location upon a lode mining claim, placer claim, tunnel right or location, or mill site claim or location, the locator shall record a true copy of the notice together with a statement of the markings of the boundaries as required in this chapter, and of the performance of the required discovery work, in the office of the County Recorder of the County in which such claim is situated.

LOCATION NOTICE—LODE—WOLCOTTS FORM 1133

Application for Aid under M.O. 5 of
Tungsten Prospecting Associates
H.J. Kandel
2409 e 19th Street
Long Beach 6, Calif.

1. (a) Description of property involved:
See attached photostatic copies of Location notice of mineral claim for details.

(b) Applicants hold a proved mineral claim on the property.

(c) Legal description:
Claim is located at Township 2 north
Section 13
Range 2 east
On Rose mine road adjacent to
BM 6288.5.
San Bernadino County
State of California

A. V. HERR LABORATORY

ASSAYERS AND CHEMISTS

SINCE 1902

LABORATORY 5176 HOLLYWOOD BLVD. PHONE OL. 5052

CERTIFICATE № 13215

HOLLYWOOD 27, CALIFORNIA, Oct, 15, 19 51

WE HEREBY CERTIFY THAT THE SAMPLES ASSAYED FOR Mr. Wendell Deeter
GAVE THE FOLLOWING RESULTS:

OWNER'S MARK	GOLD OZ. PER TON	SILVER OZ. PER TON	WO_3					VALUE PER TON
Sample for Tungsten,			2.76%					$179.40

GOLD @ $_____ PER OZ. WO_3 $65.00 (per unit of 60% conct.)

SILVER @ $_____ PER OZ. CHARGES $ 5.00 Pfd.

A. V. Herr, ASSAYER

Application for Aid under M.O. 5 of
Tungsten Prospecting Associates
H.J. Kandel
2409 E. 19th Street
Long Beach 6, Calif.

2. (a) We expect to find a commercial deposit of Tungsten as Scheelite.

(b) The Scheelite occurs in veins of a mineral resembling Andalusite, having a hardness of 6.5, and a specific gravity of 3.14. The principal vein is about three feet wide. There are one or more secondary parallel veins. An assay (photostat attached) reported 2.76 % WO_3. Dip of the veins is about 80 degrees. The vein outcrops on a 25 degree slope. The Scheelite occurs as solid crystalline material in pockets varying in size from one inch to four inches in diameter. The pockets are irregularly spaced in the matrix with practically no tungsten finely dispursed in the matrix material. Occurence to a lessor degree is in the form of a continuous vein of Scheelite.

Sketch of Geologic Features
(Viewed at right angle to dip of veins)

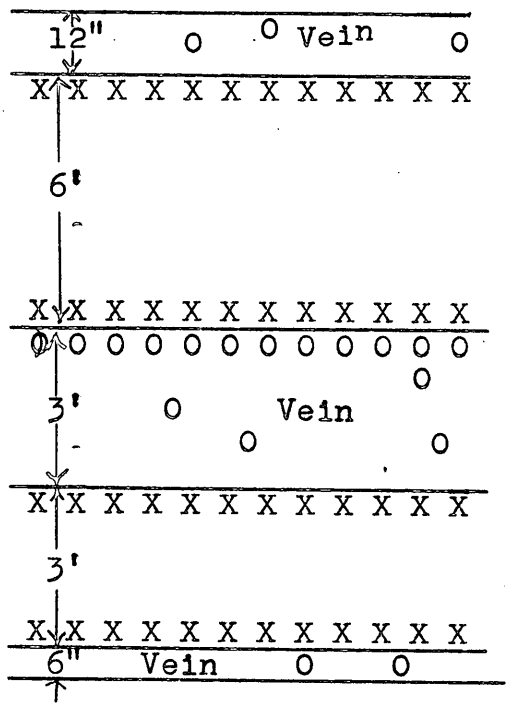

O= Pockets of crystalline $CaWO_3$

Strike is NW
Dip is 80 deg.

Application for Aid under M.O. 5 of
Tungsten Prospecting Associates
H.J. Kandel
2409 E. 19th Street
Long Beach 6, Calif.

3. (a) Proposed work:

(1.) One tunnel, 5' wide, 6'6" high, 200' long, so placed as to intersect the principal vein at about 100 feet below grade. (This work to be contracted at about $27 per linear foot).

(2.) Ten surface cross trenches, 4' wide, 5' deep, 12', at right angle to the veins, at about 100' intervals, or at more or less interval if indicated. (This work to be accomplished by applicants.)

This plan should delineate the extent of the veins along the strike, and prove it to a depth of about 100'. The irregular spacing of the crystalline pockets prevents use of diamond drill coring for exploration. The steep slope of the hill, and the nearly vertical dip of the vein system make a tunnel at right angles to the veins the logical means of exploration.

Total cost of the project is estimated to ~~be~~ $7355.20.

(b) Time required to start: One month from date of approval of Project Contract.

Time required to complete: Six months

Application for Aid under M.O. 5 of
Tungsten Prospecting Associates
H.J. Kandel
2409 E 19th Street
Long Beach 6, Calif.

4.

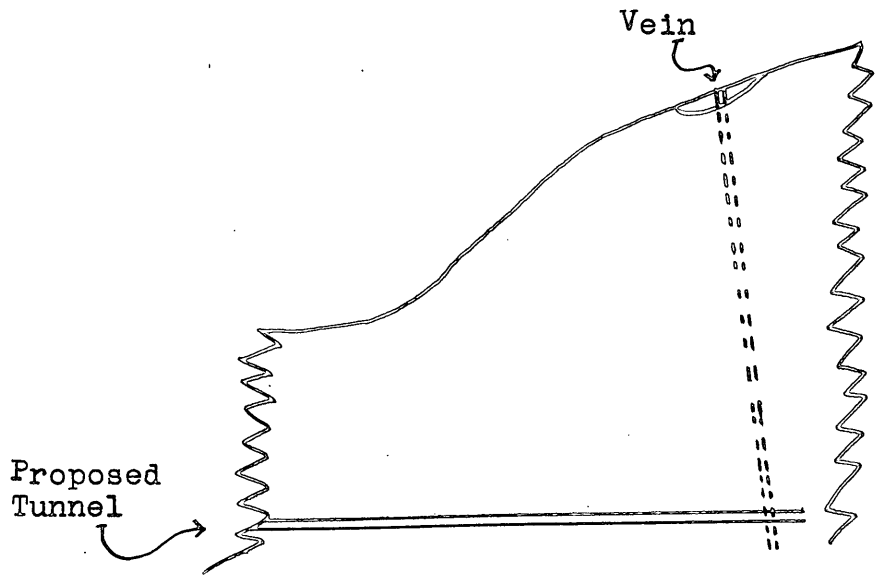

NE-Sw Section

Application for Aid under M.O. 5 of
Tungsten Prospecting Associates
H.J. Kandel
2409 E. 19th Street
Long Beach 6, Calif.

5. Existing facilities - None

Application for Aid under M.O. 5 for
Tungsten Prospecting Associates
H.J. Kandel
2409 E. 19th Street
Long Beach 6, Calif.

6. Additional facilities:
One tool shed @ $200.00

Application for Aid under M. O. 5 of
Tungsten Prospecting Associates
H.J. Kandel
2409 E. 19th Street
Long Beach 6, Calif.

7. Operating Equipment:
For Ten Cross trenches

(a) Rented:	
Compressor, hose, jackhamer	$162.50
(b) Purchased:	
Jackbits	10.00
Gasoline for compressor	56.00
(c) Furnished by applicant:	
Blasting machine, depreciation	10.00
Shovels, picks, hammers, etc, depreciation	20.00
Blasting wire, depreciation	36.00
Total (for trenches)	$294.50

Operating Equipment for tunnel included in total cost under item 3. (a), and specifically included in contractors estimate, item 3. (a) (1.), since tunnel is to be contracted.

Application for Aid under M.O. 5 of
Tungsten Prospecting Associates
H.J. Kandel
2409 E. 19th Street
Long Beach 6, Calif.

8. Schedule of Labor:
(for the ten cross trenches)

	Rate	hrs/trench	Total
one supervisor	@ $2.25	16	$360.00
one miner	2.00	16	320.00
one mucker	1.75	19	332.50
			$1012.50

Since tunnel is to be contracted, labor cost in it is included in item 3. (a).

Application for Aid under M.O. 5 of
Tungsten Prospecting Associates
H.J. Kandel
2409 E. 19th Street
Long Beach 6, Calif.

9. Materials and Supplies (for ten cross trenches)

Dynamite, 14 cases	$186.70
Electric blasting caps, inst, 150	25.50
Electric blasting caps, delay, 150	51.00
Assaying	20.00
Engineering consultation	100.00
Road upkeep	40.00
Accounting	25.00
	$448.20

Tunnel- to be contracted, included in item 3. (a).

Application for Aid under M.O. 5 of
Tungsten Prospecting Associates
H.J. kandel
2409 E. 19th Street
Long Beach 6, Calif.

10. (a) We are prepared to invest $1863.80 in cash, and in labor and equipment as outlined in items 7, 8, and 9 for the trenching.

(b) This is sufficient to pay our 25% of the project.

Application for Aid Under M.O. 5 of
Tungsten Prospecting Associates
H.J. Kandel
2409 E. 19th Street
Long Beach 6, Calif.

11. Item 9 includes upkeep on road. Said road is to be constructed by applicants while this aid application is pending.

DEPARTMENT OF INTERIOR
BUREAU OF MINES
REGION III
RECEIVED

1972 FEB 13 AM 11:12

SAN FRANCISCO, CALIFORNIA

Form MF-100
(May 1951)

U. S. DEPARTMENT OF THE INTERIOR
DEFENSE MINERALS ADMINISTRATION

Form approved.
Budget Bureau No. 42-R1026.

GENERAL TECHNICAL DATA
FOR USE UNDER THE
DEFENSE PRODUCTION ACT OF 1950

NOT TO BE FILLED IN BY APPLICANT

Docket No. Dmea - 2310

Date received 1/2/52

DEPARTMENT OF THE INTERIOR
Defense Minerals Administration
RECEIVED
JAN 2 - 1952

Tungsten Prospecting Associates
H.J. Kandel
2409 E 19th Street
Long Beach 6, Calif.

Name and address of applicant

Date Dec 24, 1951

INSTRUCTIONS

This form is to be filed with Defense Minerals Administration, Department of the Interior, Washington 25, D. C. It should be accompanied by appropriate application form when a specific type of Government assistance is requested, in the form of (1) loan, (2) purchase contract, (3) Government guarantee of a private loan, (4) priorities or allocation of mining equipment, and maintenance, repair and operating supplies, and (5) other forms of Government assistance that might arise under the Act. Submit four (4) signed copies of the form and accompanying papers. Name and address should be stamped or typed on each sheet of this form and all accompanying papers. *When a question is inapplicable it should be so stated on the form.* Additional sheets may be attached in answering any questions or in supplying additional information. (IF YOU CANNOT ANSWER A QUESTION, SO STATE.) If a question is answered elsewhere indicate where answered. It is not necessary to answer it again.

GENERAL TECHNICAL DATA

Supply the following information on separate sheets, arranged, numbered, and lettered as indicated:

1. Materials produced:
   (*a*) What are the chief mine, mill, or smelter products?
   (*b*) What are the byproducts, if any?
2. Name(s) and type(s) of mine(s), mill(s), smelter(s), refinery(ies), pit(s), quarry (ies), drilling operation(s). Include old names of property, if any. Show extent of workings, including the following:
   (*a*) Linear feet of shafts.
   (*b*) Linear feet of drifts and crosscuts.
   (*c*) Linear feet of tunnels or adits.
   (*d*) Linear feet of other mine openings (explain briefly).

   Indicate whether mine is flooded or not. Describe any pumping problems. Give size or productive capacity.
3. For each operation listed above supply the following:
   (*a*) Distance and direction from nearest town and shipping point.
   (*b*) Mining district.
   (*c*) Township, Section, Range.
   (*d*) County, State.
4. (*a*) State whether or not property is now in operation, and if in operation, by whom operated.
   (*b*) Are you operating this property as:
   - ☐ Owner.
   - ☐ Lessee.
   - ☐ Contractor.
5. Number of years in production _____

   If not in production or operation, estimated date when production will begin _____
6. Experience of operators:

   Describe the mining and general business experience of (*a*) the applicant, and (*b*) the person or persons who manage the project.
7. History:
   (*a*) Give a statement, as complete as possible, of previous exploration, development, operation, and production of property, with reasons for suspension of operation.
   (*b*) State briefly the known history and production of adjoining and neighboring properties.
   (*c*) Furnish any available (private) reports that may apply to this application, including results of mine examinations, recommended exploration and development, and metallurgical investigations.

8. Names and addresses of Officers, Directors, or Partners, and in addition thereto, the five largest stockholders if applicant is a corporation.

Name and Address	Official Title (If officer is also director indicate by "D")	Total of Annual Salary, Commissions, Bonuses, Etc., Received From Applicant and Affiliates During Last Fiscal Year	Estimated Net Worth Outside of Interest in Applicant	Number of Shares Held in Applicant Corporation		Life Insurance Carried for Benefit of Applicant	
				Common	Preferred	Amount	Net Cash Surrender Value After Loans
R. D. Foster	(b)	(c)	(d)	(e)	(f)	(g)	(h)
5838 N. Faculty Ave	Associate	None	$7000	25 %	owner	None	
Bellflower, Calif.							
J. R. Stevenson	Associate	None	70,000	25 %	owner	None	
1283 Dorothea Rd.							
La Habra, Calif.							
R. H. McKray	Associate	None	3000	25 %	owner	None	
2409 E 19th St.							
Long Beach, Calif.							
R. J. Kendel	Associate Sec'y	none	6000	25 %	owner	none	
2409 E 19th St.							
Long Beach, Calif.							
	Total	None	x x x x x	100 %		x x x x x	x x x x x

If more lines are needed continue on separate sheet.

9. Capital Stock Issues:

For Corporate Applicants

Not Applicable

Item	Authorized (a)	Outstanding (b)	Par Value (c)	Number of Shares Outstanding (d)	Dividend Rate Last Paid* (e)
Common stock	$	$	$		
Preferred stock	$	$	$		

*Indicate period covered.

10. Production: Not Applicable, since never in production

Item	Kind of Product (a)	1948 Total (b)	1949 Total (c)	1950 Total (d)	Present Average Monthly (e)
1. Quantity of product mined or quarried (Short, long, metric tons; barrels; pounds; etc.)					
2. Quantity of product processed (specify unit of measure and type of process)					
3. Quantity and grade of product sold or shipped (specify units of measure)					

11. Do you contemplate a change in the present average monthly rate of production? If so, state estimated maximum monthly production and basis of change.

12. Ore or Mineral Reserves:

(a) Describe the ore or mineral deposit briefly. Accompany the application by any available report on the geology and ore reserves.

See separate sheets

16—63792-1

General Technical Data, Form MF-100
Tungsten Prospecting Associates
H.J. Kandel
2409 E 19th Street
Long Beach 6, Calif.

1. Materials produced:
   (a) Scheelite, a tungsten ore, is to be produced.
   (b) No by-products are comtemplated.

General Technical Data, Form MF-100
Tungsten Prospecting Associates
H.J. Kandel
2409 E 19th Street
Long Beach 6, Calif.

2. The name of the claim is the TPA No. 1. Extent of workings are as follows:

(a) Shafts- none
(b) One ten foot crosscut, depth to ten feet
One fifteen foot drift, open cut
One ten foot drift, open cut.
(c) No tunnel or adits.
(d) No other mine openings.

No openings are flooded. All work indicated were for exploratory purposes. There has been no commercial operation.

General Technical Data, Form MF-100
Tungsten Prospecting Associates
H.J. Kandel
2409 E 19th Street
Long Beach 6, Calif.

3.(a) Distance from Big Bear City, Calif. is 20 miles. Direction is east from Big Bear City.
(b) Round Valley Mining District.
(c) Township 2 North, Section 13, Range 2 East.
(d) San Bernadino County, State of California

General Technical Data, Form MF-100
Tungsten Prospecting Associates
H.J. Kandel
2409 E. 19th Street
Long Beach 6, Calif.

4. (a) The property is not now in operation.
(b) The property is held by the applicants as a proven mineral claim.

General Technical Data, MF-100
Tungsten Prospecting Associates
H.J. Kandel
2409 E.19th Street
Long Beach 6, Calif.

5. Number of years in production-- none. It is estimated that production will begin on or about June 1, 1952.

General Technical Data, Form MF-100
Tungsten Prospecting Associates
H.J. Kandel
2409 E 19th Street
Long Beach 6, Calif.

6. Experience of operators:
The below listed comprise the Tungsten Prospecting Associates, and as such are the applicants.

(a) Robert H. McKray: six years in heavy construction, Carpenter and Pilebutt foreman.

Jerry R. Stevenson : Twenty four years in oil refinery, refining foreman.

Wendell F. Deeter : Fifteen years as chemical Engineer in oil refinery.

Herbert J. Kandel : Six years as chemical Engineer in oil refinery

(b) It is contemplated that one or more of the above will manage the project, directly, with indirest supervision by the group.

General Technical Data, Form MF-100
Tungsten Prospecting Associates
H.J. Kandel
2409 E 19th Street
Long Beach 6, Calif.

7. History:

(a) An outcropping of Scheelite was discovered on October 6, 1951. The required work for proof of claim was completed on December 1, 1951. No commercial operations have commenced.

(b) There are no indications of mining operations on the adjoining properties. About five miles from subject claim there is an abandoned gold mine (Rose Mine).

(c) An assay reported 2.76% WO_3 in an ore sample. A photostat of the report is included in section 2.(b) of the Form MF-103 questionaire, which accompanies this questionaire.

General Technical Data, Form MF-100
Tungsten Prospecting Associates
H.J. Kandel
2409 E 19th Street
Long Beach 6, Calif.

11. Production has not as yet begun. We contemplate maximum production commensurate with the exploratory results and the financial ability of the applicants.

General Technical Data
Tungsten Prospecting Associates
H.J. Kandel
2409 E 19th Street
Long Beach 6, Calif.

12. (a) The Scheelite occurs in a system of parallel veins, strike NW and dip about 80 degrees. The principal vein is about three feet wide. The Scheelite occurs in irregularly spaced pockets as crystalline material.

(b) (1) The three foot vein have been proved to a depth of seven feet. Another exploratory cut seventy-five feet distant have revealed a tungsten vein, assumed to belong to the same system.

(2) With the primary vein 75' long, 3' wide, and 7' deep, as indicated by exploratory showings, the proved volume is 1575 feet^3. At 10 cubic feet per short ton, this indicates 157 short tons. An assay revealed 2.76% WO_3.

Mineral Reserves

	Est. Tons	Wt% WO_3	Gross Value/ton	Recov Value/ton	Est cost Prod/ton
Measured	157	2.76 est	$179.40	$119.20	$20.00

Probable We do not know, purpose of application is to determine this.

(c) Not applicable, no placer deposits.

General Technical Data, Form MF-100
Tungsten Prospecting Associates
H.J. Kandel
2409 E. 19th Street
Long Beach 6, Calif.

13. Access Roads:

Big Bear city is 20 miles from the TPA No 1 claim. Fifteen miles of this road is a paved primary road. Five miles are unimproved, graded , but passable.

General Technical Data, Form MF-100
Tungsten Prospecting Associates
H.J. Kandel
2409 E 19th Street
Long Beach 6, Calif.

14. Water supply:
None needed for mining operation.

General Technical Data, Form MF-100
Tungsten Prospecting Associates
H.J. Kandel
2409 E 19th Street
Long Beach 6, Calif.

15. Power:
No electric power is available. Power necessary must be obtained locally from gasoline equipment.

General Technical Data , Form MF-100
Tungsten Prospecting Associates
H.J. Kandel
2409 E 19th Street
Long Beach 6, Calif.

16. Labor:

Not applicable, since we have never been in operation.

General Technical Data, Form MF-100
Tungsten Prospecting Associates
H.J. Kandel
2409 E 19th Street
Long Beach 6, Calif.

17. Equipment and facilities:
None.

General Technical Data, Form MF-100
Tungsten Prospecting Associates
H.J. Kandel
2409 E 19th Street
Long Beach 6, Calif.

18. This information form is submitted with an application for aid in exploring a hitherto undeveloped, and unexplored mineral deposit. Therefore, many of the above questions, specificly about operations were not applicable.

(*b*) If deposit is other than placer:

(1) Submit assay plans and/or sections showing location and size of proved (measured) and probable (indicated) ore or mineral reserve.

(2) State the tonnage (indicate type of ton) and grade of each class of ore reserve, as above, and show how computed. Tabulated total ore reserve as follows:

TOTAL ORE OR MINERAL RESERVES

Ore or Mineral Reserve	Estimated Tons (a)	Metal or Mineral Content Per Ton (Grade) (b)	Gross Value Per Ton (c)	Recoverable Unit Value Per Ton (d)	Estimated Cost of Production Per Ton (e)
Measured (proved)					
Indicated (probable)					

(*c*) If placer:

(1) Give estimated total yardage and average marketable mineral content of each deposit.

(2) Submit map showing location of placer deposit and surrounding area, with all test holes or pits. Submit logs of each hole and test pit with depth and average value of each.

(3) Describe gravel, stating whether fine, medium or coarse; loose, tight, cemented, or frozen, and whether it contains stumps or boulders more than 1 foot in diameter; if so, how large, and in what proportion.

(4) Describe bedrock, giving type (granite, sandstone, shale, etc.) and state whether it is hard or soft, smooth, uneven or rough.

(5) Describe overburden, stating whether loose, tight, or cemented; fine or coarse textured; furnish estimate of average thickness and total amount.

(6) Tabulate the reserves using the form outlined above for ore or mineral reserves.

13. Access Roads:

Give road distances to shipping, supply and residence points, stating kind and condition of roads.

14. Water Supply:

State source and quantity of water available for operations and whether sufficient for all seasons of year.

15. Power:

State amount of power used, rate per hour, and source thereof.

16. Labor:

State number and classes (miners, muckers, millmen, etc.) of men employed during a recent representative payroll period.

17. Equipment and Facilities:

Describe present equipment on the property, including buildings. (State condition.) List major pieces of equipment now owned or controlled and in serviceable condition available for this operation.

18. Are there any particular conditions or circumstances affecting your operations that are not described above? If so, explain.

CERTIFICATION

The undersigned company, and the official executing this certification on its behalf, hereby certify that the information contained in this form and accompanying papers is correct and complete to the best of their knowledge and belief.

Tungsten Prospecting Associates
(Name of company)

By Herbert J. Randel
(Signature of authorized official)

Dec 24, 1951
(Date)

Secretary
(Title)

Title 18, U. S. Code (Crimes), Section 1001, makes it a criminal offense to make a willfully false statement or representation to any department or agency of the United States as to any matter within its jurisdiction.

U. S. GOVERNMENT PRINTING OFFICE 16—63792-1

DEPARTMENT OF INTERIOR
BUREAU OF MINES
REGION III
RECEIVED

1970 FEB 13 AM 11:12

SAN FRANCISCO, CALIFORNIA

(Rev.)
(52)

UNITED STATES
DEPARTMENT OF THE INTERIOR
DEFENSE MINERALS EXPLORATION ADMINISTRATION

Budget Bureau No. 42-R1036.3.
Approval expires 6-30-53.

DEPARTMENT OF THE INTERIOR
Defense Minerals Administration
RECEIVED
DEC 23 1952

gd 1/6/53

OPERATOR'S MONTHLY REPORT AND VOUCHER

Month of Oct 22 (Sept 17 to), 1952 Docket No. DMEA 2310 Contract No. Idm E-377

Operator's Name Tungsten Prospecting Associates Minerals Tungsten

Address 2409 E. 19th St., Long Beach 6, Calif.

Contract Amount, $ 6,700.00 Government Participation: 75 % Amount, $ 5,025.00

ITEMS OF COSTS	FOR OPERATOR'S USE: Monthly Total	Totals Previously Reported	Totals To Date	FOR GOVERNMENT USE ONLY: Approved Monthly Total	Approved Totals Previously Reported	Approved Totals To Date
(1) Independent Short Form Contracts:						
Drilling						
Bulldozing						
Crosscutting						
Drifting						
(2) Labor and Supervision:						
Labor			712.00	692.00		692.00
Supervision						
Technical Services						
(3) Operating Mat'ls. and Supplies:						
Timber						
Explosives			71.07	71.07		71.07
Pipe						
Track						
Gasoline, oil, etc.			70.14	70.14		70.14
Misc. supplies			22.45	26.44		26.44
(4) Operating Equipment:						
Rental			329.70	280.00		280.00
Purchase						
Depreciation						
(5) Initial Rehabilitation and Repairs						
(6) New Bldgs., Improvements, etc. Tool Shed			30.00	30.00		30.00
(7) Miscellaneous Accounting				20.00		20.00
~~Repairs to Equipment~~						
Sampling and Analysis			72.00	72.00		72.00
Payroll Taxes			22.47	22.47		22.47
Liability Insurance			189.63			
Workmens Compensat.			150.00	150.00		150.00
~~Postage, Express etc.~~			~~[illegible]~~			
(8) Contingencies (specify): Postage & Express				6.81		6.81
TOTALS			1676.27	1440.93		1140.93

I certify that the above bill is correct and just and that payment therefor has not been received.

Date Nov 5, 1952 Payee Tungsten Prosp. Assoc.

Per Herbert J. Kaufman Title partner

*When a voucher is signed or receipted in the name of a company or corporation, the name of the person writing the company or corporate name, as well as the capacity in which he signs, must appear. For example: "John Doe Company, per John Smith, Secretary," or "Treasurer," as the case may be.

NOTE.—Title 18, U. S. Code (Crimes), section 1001, makes it a criminal offense to make a willfully false statement or representation to any department or agency of the United States as to any matter within its jurisdiction.

(Instructions on reverse)

Pursuant to authority vested in me, I certify that this account is correct and proper for payment in the amount of:

$1080.70

A. J. Renner
Authorized Certifying Officer

Signature
(Authorized Certifying Officer)

Date DEC 17 1952 Vou. No. SF-DMEA-29

(See other side)

(For Government use only)

CERTIFICATION BY GOVERNMENT REPRESENTATIVE:

I certify that to the best of my knowledge and belief the contractor submitting this voucher is operating a Defense Minerals Exploration Administration project under Contract No. [illegible]377 in accordance with the terms of the contract.

Signature R. C. Johnson Title Chief, Mining Div. Date Nov. 12, 1952.
R. C. Johnson Region III

APPROVAL BY DMEA EXECUTIVE OFFICER OR ALTERNATE:

Signature H. C. Miller Title Executive Officer DMEA Field Team Date Nov. 13, 1952
H. C. Miller Region III

MONTHLY REPORT OF OPERATOR

The Operator (Contractor) of an exploration project is required to make a monthly report to the Government through the Regional Executive Officer. This report consists of three parts as follows:

(a) *Form MF-104—Operator's Monthly Report and Voucher.*—This form details expenditures and constitutes a voucher for reimbursing the Operator for the Government's share of costs;

(b) *Form MF-104A—Operator's Unit Cost and Progress Report.*—This is a statistical report of expenditures which shows costs for the various types of operation; and

(c) *Narrative.*—A concise narrative description of progress made, results accomplished, and any unusual difficulties encountered must be furnished as an attachment to this Report and Voucher. Wherever possible, the narrative is to be illustrated with maps or sketches showing formations penetrated and location and assays of samples taken as well as advances in workings. In the case of diamond drilling or churn drilling, the location and inclination of holes is to be shown on a map; logs and assays also are to be submitted.

The Monthly Report of Operator should be prepared in an original and four copies all of which must be sent to the Executive Officer of the Region not later than the 15th of the month following.

Preparation of Form MF-104—Operator's Monthly Report and Voucher.—All the applicable spaces in Form MF-104 should be filled in by the Operator, and the Operator or his agent should sign the certification in the lower left corner of the form.

The items of costs are arranged in the order they appear in Article 6 (a) of Form MF-200 (Revised February 1952), however, this form is readily adaptable for use in reporting activities under other contract forms.

Under Item (1) delete words "Short Form" if the contract is a sub-contract under Form MF-200; and delete word "Independent" if the contract reported is on Form MF-200 (A). Also, report work paid for on a unit basis under contract Form MF-200 as though it were performed under an independent contract.

Under Item (2) include labor, supervision and technical services incurred for the exploratory operations. Do not include labor, supervision and technical services used for work performed under items (5) and (6).

Under Item (3) include the costs of material and supplies used in the project other than that used under items (5) and (6).

Under Item (4) appear the three types of operating equipment expenditures, that is, rental, purchase and depreciation. The expenditures made for renting equipment belonging to a third party will be reported under "Rental". The amount paid or duly obligated for payment for the purchase of equipment will be reported under "Purchase". The amount of expenditures due the Operator to reimburse him for depreciation of equipment owned will be reported under "Depreciation".

Item (5) comprises costs of labor, supervision, technical services, materials, etc., which are used in the initial rehabilitation and repair of existing buildings, installations, fixtures, and equipment. These costs, therefore, should not be reported under items (2) and (3).

Item (6) includes the labor, supervision, technical services, materials, etc., used in the installation or construction of new buildings, fixed improvements, etc., necessary for the project. These costs, therefore, should not be reported under items (2) and (3).

Item (7) covers miscellaneous types of expenditure such as payroll taxes, liability insurance, workmen's compensation insurance, repairs to equipment and sampling and analysis. Only that part of payroll taxes, liability insurance and workmen's compensation which are paid by the operator should be reported under item (7). The share paid by the employee as a payroll deduction is to be included under item (2) as labor costs.

Item (8) includes any unforeseen costs not included in the other seven categories.

The original of Form MF-104 when submitted for reimbursable expenses incurred under contract Form MF-200 must be supported by original documentation or by certified copies of purchase orders, payrolls or transcripts of payrolls, unless such documentation has been waived by the Regional Executive Officer. This certification may be stated thus, "Certified True Copy (or Transcript)", followed by appropriate signature. If the Executive Officer of the Region determines that a contract under Form MF-200 should have an "on-site" audit, that is, a Government auditor should make an audit of the Operator's books and records of account, the Operator need not support his monthly voucher with original or certified documents except in cases of equipment purchases whose individual costs exceed $50.00. In these cases the original or a certified copy of the purchase order or invoice should be attached to the Monthly Voucher. N. B.—Only the *original* of Form MF-104 is required to be documented. The four copies of Form MF-104 are not to be thus supported.

Form MF-104 submitted for reimbursement under fixed price contracts on Form MF-200 (A), however, are not required to be supported by documentation of any kind. The Operator will submit his claim under item (1) of Form MF-104 by deleting as stated above the word "Independent" and by showing the number of feet or other units immediately after the appropriate descriptive word, such as, drilling, bulldozing, crosscutting, drifting, etc., and giving the "Monthly Total" amount due. "Totals Previously Reported", and "Totals to Date" columns should also be filled in.

U. S. GOVERNMENT PRINTING OFFICE 205675

Budget Bureau No. 42-R1151
Approval expires 6-30-53.

UNITED STATES
DEPARTMENT OF THE INTERIOR

DEFENSE MINERALS EXPLORATION ADMINISTRATION

DEPARTMENT OF THE INTERIOR
Defense Minerals Administration
RECEIVED
DEC 2 0 1952

OPERATOR'S UNIT COST AND PROGRESS REPORT

Month of Aug 17 to Oct 22 1952 Docket No. DMEA 2310 Contract No. Ida 2-377
Operator's Name Tungsten Prospecting Associates Minerals Tungsten
Address 2409 E. 10th St., Long Beach 6, Calif.

OPERATION	UNIT	COSTS THIS MONTH	UNITS THIS MONTH	COSTS TO DATE	UNITS TO DATE	UNIT COSTS TO DATE	AUTHORIZED BY CONTRACT Units	AUTHORIZED BY CONTRACT Unit Costs
Drifting								
Crosscutting								
Raising								
Shafts								
Winzes								
Drilling: Core								
Churn								
Auger								
Stripping								
Trenching	Lin.			1646.37	1330	1.219	1000	1.604
Test Pits								
Roads and Trails								
TOTAL DISTRIBUTED COSTS				1646.37				TOTAL COSTS AUTHORIZED BY CONTRACT
Operating Equipment Purchased								
Initial Rehabilitation and Repairs								
New Buildings, Improvements, etc.				30.00				
TOTAL COSTS				1676.37				1600.00

The undersigned company, and the official executing this certification on its behalf, hereby certify that the information contained in this report is correct and complete to the best of their knowledge and belief.

Date Nov 3, 1952 Operator Tungsten Pros. Assoc.

Per Herbert J. Kandel Herbert J. Kandel Title Partner

REMARKS: This report covers entire Stage 1 of the contract

→ NOTE.—Title 18, U. S. Code (Crimes), section 1001, makes it a criminal offense to make a willfully false statement or representation to any department or agency of the United States as to any matter within its jurisdiction.

(Instructions on reverse)

(For Government use only)

INSTRUCTIONS

Preparation of Form MF–104A—Operator's Unit Cost and Progress Report.—Applicable places on Form 104A should be filled in by the Operator. The purpose of this form is twofold as follows: (1) to furnish the supervising engineers and other administrators with statistical information necessary to better determine the progress of the project; and (2) to furnish more permanent information on mining costs for future use. The more important phases of operation on which permanent information is desired have been outlined in the form. There are blank lines, however, for those unusual phases which may need to be reported for a particular project. It will be necessary for the Operator to distribute his costs among the applicable phases reported with the exception of three items the costs of which are not to be distributed by the Operator. These three items are: "Operating Equipment Purchased", "Initial Rehabilitation and Repairs", and "New Buildings, Improvements, etc." The reason for not distributing these items on a monthly basis is doubtless clear to the Operator, since such distribution might well overstate the cost for any one month or period short of the entire contract period.

Form MF–104A has been designed to tie in with Form MF–104 for both monthly and cumulative costs. The "Total Costs" on Form MF–104A for each month should equal the monthly "Total Costs" as reported on Form MF–104. This is also true of the "Total Costs To Date".

In preparing Form MF–104A, it will be necessary frequently to distribute certain costs over a number of items. For instance, supervisory and engineering costs may have to be distributed over several phases, such as, drifting, crosscutting, raising, etc., provided that these items were reported active for the month. Such distributions should be made on the basis of time spent on the various phases, on man days of labor charged to such phases, or on some other equitable basis. "Operating Equipment", "Initial Rehabilitation and Repairs", and "New Buildings Improvements, etc.", will be distributed to the several phases of the project by the Washington Office of DMEA at the close of the project if determined necessary. The last two columns headed "Authorized by Contract" will be filled in by the Operator if such information is found in the contract. This information is usually a part of Exhibit "A" of the contract. A space for remarks has been provided for the use of the Operator to call attention to any unusual circumstances causing excessive or disproportionate unit costs.

U. S. GOVERNMENT PRINTING OFFICE 205676

2409 E. 19th St
Long Beach 6, Calif.
Nov 5, 1952

Mr. AC Johnson
Chief, Division III
Bureau of Mines
P.O. Box 1551
Reno, Nevada

Re: Tungsten Prospecting Assoc.
DMEA 2310: Idm E-377
Tungsten
San Bernadino County, Calif.

Dear Sir:

Transmitted herewith are forms 104 and 104A, statements, and receipts for Stage I of above noted contract.

Your representative samples were shipped on Oct 27, covering letter was dated Oct 28. This letter contained assay results, less two samples. These two results are still not available.

The work was done as nearly in conformation to the contract as possible. Prior to beginning of contract work, the main vein had been exposed for about 65 feet (about double that as originally seen by your USGS Inspectors). The eight cross-trenches were executed as shown in sketch accompanying our letter of Oct 28. Trench # 8 was not completed since bedrock was not reached at a depth of four feet. Samples were taken every five feet in the main trench, and where indicated in the cross trenches.

Mr Sheehan requested data on our shipment of approximately 8 tons to Parker Mill, Barstow. We must explain that we do not believe concentrates returned were ours. Iron content was very high. Gangue material consisted of epidote, white and iron stained quartz. One of our partners asked Parker about a possible mix-up, and was assaulted! However, the concentrates given us were as follows:

265 pounds - 36.48 WO_3
148 Pounds - 26.36 WO_3

We realize that we are late with this report. There was some trouble in obtaining proper receipts. Furthermore, we attemped to do the bookkeeping work, and became a little swampted in paper work.

Thanking you for your consideration of this report, we are

Yours very truly,

Herbert J. Kandel

Herbert J. Kandel

Yes Audited

No Certified

WORK ANALYSIS SHEET - DMEA PROJ

Analysis as of 12/10/1954
Incl. Voucher for

Yes Actual Cost

Agreed Unit Costs

Name Tungsten Prospecting Association

Docket No. DMEA-2310

State California

Commodity Tungsten

Idm-E No. 377

OPERATION	AUTHORIZED Units	AUTHORIZED Cost	COMPLETED Units	COMPLETED Cost	NET COST
Drifting & Crosscutting	40'	900.00			
Raising					
Shafts	50'	3,000.00			
Winzes					
Drilling (Specify)					
Surface Excavation		1,705.00		1,338.93	
Underground Excavation					
Roads and Trails					
Operating Equipment Purchased					
Surface Rehabilitation & Repairs					
Underground Rehabilitation					
New Building, Improvements, etc.		825.00		30.00	
Other (Specify) Sampling and Assaying		270.00		72.00	
Totals		6,700.00		1,440.93	

Contract terminated as little ore was found.

Prepared by TLC

71626

Memorandum

To Mr. W. S. Martin, Chief, Iron and Ferro Alloys Division, DMEA

From T. L. Chapman, Iron and Ferro Alloys Division, DMEA

Subject Re-Docket No. 2310, Tungsten. Contract Idm-E-377
Tungsten Prospecting Associates
TPA No.1 and TPA No.2 Lode Mining Claims.
San Bernardino County, California.

Contract:

Stage I.	Trenches.	$1,830.00
Stage II	Sinking and drifting	4,870.00
	Total	6,700.00

Government participation. 75 percent. $5,025.00

Stage I. Trenching completed October 22, 1952. This work showed that the values were erratic and irregular, and that the continuation of work under Stage II, was not warranted.

Notice of termination of the contract was sent to the Operator on December 3, 1952.

Report of Review in lieu of Audit shows that $1,440.93, was spent, of which the Government share was $1,080.70, which was paid to the Operator.

Letter to the Operator on January 14, 1953, advised of non-certification.

Eight tons of ore was shipped to a mill at Barstow, California, prior to starting of work on the contract. The returns from this shipment were as follows:

265 pounds of concentrates containing 36.48 percent WO_3
348 pounds of concentrates containing 26.35 percent WO_3

These would show that 0.84 percent WO_3 was saved from the 8 tons of ore.

$3,944.30 was left from Government share of contract.

T. L. Chapman

T. L. Chapman

UNITED STATES
DEPARTMENT OF THE INTERIOR
DEFENSE MINERALS EXPLORATION ADMINISTRATION
WASHINGTON 25, D. C.

Office of
Executive Officer
DMEA Field Team
Region III

DEPARTMENT OF THE INTERIOR
Defense Minerals Administration
RECEIVED
FEB 24 1953

1012 Flood Building
870 Market Street
San Francisco 2, Calif.

February 20, 1953

Memorandum

To: Operating Committee, DMEA, Interior Building, Washington 25, D. C.

From: Executive Officer, DMEA Field Team, Region III

Subject: Final Report

Attached are four copies of Final Report on -

Docket DMEA-2310

Contract Idm-E377

Commodity Tungsten

Operator - Tungsten Prospecting Associates

Property - Round Valley Mining District, San Bernardino County, California

By Benjamin H. Sheahan, Mining Engineer

Dated February 12, 1953

H. C. Miller
Executive Officer
DMEA Field Team, Region III

Attachment

Copy to: E. H. Bailey, USGS (With one copy of report)
Geo. Mavor

Reviewed by
DMEA OPERATING COMMITTEE
3-2-53
(date)

FINAL RPT.

UNITED STATES
DEPARTMENT OF THE INTERIOR
DOUGLAS McKAY, SECRETARY

DEFENSE MINERALS EXPLORATION ADMINISTRATION

REPORT OF EXAMINATION BY FIELD TEAM
REGION III

FINAL REPORT

Contract Idm-E377

DMEA-2310, Tungsten Prospecting Associates

San Bernardino County, Calif.

(Tungsten)

Benjamin H. Sheahan, Mining Engineer,
U. S. Bureau of Mines

February 12, 1953

Reviewed by
DMEA OPERATING COMMITTEE

3-2-53
(date)

FINAL REPORT

Docket No.: DMEA-2310 (Tungsten)

Name and address of operator: Tungsten Prospecting Associates,
a partnership,
Kendell F. Deeter
Jerry R. Stevenson
Robert H. McCray
Herbert J. Kandel

2409 E. 19th Street
Long Beach 6, Calif.

Name and location of property: The Tungsten Prospecting Associates property includes the TPA No. 1 and TPA No. 2 unpatented lode mining claims located in the NW¼ of the NW¼ of sec. 13, T. 2 N., R. 2 E., (projected), S.B.B.&M., San Bernardino County, Calif.

The property is reached by following State Highway 18 to the junction of the Rose Mine road and following a one lane gravel road 6.2 miles southeasterly. The site of the prospect is a few hundred feet to the southwest of the road (fig. 1).

Contract No.: Idm-E377

SUMMARY AND CONCLUSIONS

Exploration work at the property consisted of the excavation of eight surface trenches at approximately 25-foot intervals along the strike of a scheelite occurrence located in San Bernardino Mountains, San Bernardino County, Calif. The trenches averaged 3 feet in width and depth and were from 12 to 25 feet in length.

Surface trenching exposed very spotty low grade scheelite mineralization, along the strike of the mineralized lens in marble. Check samples taken by the engineer and analyzed by the Hydrometallurgical and Ore Dressing Branch of the Bureau of Mines, of Region III, indicated that the mineralization was too low grade and too spotty to be of economic importance.

The second stage of the exploration work was not approved and the contract was terminated on December 31, 1952.

RECOMMENDATIONS

1. Additional exploration or development is not warranted.
2. DMEA should certify that the project was not successful.
3. Production is not economically feasible.

DESCRIPTION OF THE WORK COMPLETED

The first stage of the exploration work, consisting of eight surface trenches,were completed. The trenches were spaced at approximately 25-foot intervals along the mineralized zone, and averaged 3 feet in width and depth and were from 12 to 25 feet in length. Samples were cut by the operator at locations shown by map (fig. 2).

A small 8- by 10-foot tool shed was constructed near the trenches. The surface trenching, sampling by the operator, and shed construction was completed during the interval of time between two inspections of the property on September 17, 1952 and October 24, 1952, as described by interim reports of September 24 and November 12, 1952.

Prior to signing the exploration contract, the operators had excavated a trench 70 feet in length along the strike of the formation. This main trench was approximately 5 feet deep. Sampling of this trench was included as part of the exploration contract.

GEOLOGY AND MINERALIZATION

The surface trenching exposed very spotty low grade scheelite mineralization along the general strike of the mineralized lens occurring within marble walls. Some very small streaks of scheelite, an inch or more in width and less than a foot in length, apparently contain high tungsten trioxide values, however, these occurrences are too few and too small to be of economic importance.

The marble beds strike northwesterly with dips of 55° to 70° to the southwest, while the mineralized lens is almost parallel to the bedding.

An examination report on the Tungsten Prospecting Associates property, San Bernardino County, California by geologists[1/] of the U. S. Geological Survey, was completed April 3, 1952.

SAMPLE AND ASSAY DATA

Check samples taken by the engineer indicated that the mineralization was too low grade to be of economic importance. The check sample analyses by the Hydrometallurgical and Ore Dressing Branch of the Bureau of Mines of Region III were considerably lower in grade than those taken by the operator. Comparative samples and analyses are listed on map (fig. 2). The mineralization was very spotty and this may account for the differences noted.

ORE RESERVES

There are no ore reserves.

1/ Irwin, W. P., and Clark, L. D.

EXPENDITURES

Total approved	$ 6,700.00
Total cost of project	1,676.27
Government's share of cost	1,257.20
Government's share unexpended	3,767.80
Value of production during operations.	(none)

Prior to receiving the exploration contract, the operators claimed that they produced 8 tons of ore. This ore was mined from the best part of the mineralization in the main trench. The ore was hauled to the Parker mill at Barstow, California for milling. Concentrates returned to the operators, according to their statement, follows:

265 pounds @ 36.48% WO_3

148 pounds @ 26.36% WO_3

Gangue minerals in the concentrate contained some minerals not associated with the tungsten mineralization at the property according to the operator.

EFFICIENCY OF OPERATIONS - COMPETENCY OF OPERATORS

The property was idle when inspected by the engineer. Mr. H. J. Kandel and J. R. Stevenson arrived at the property while the engineers[2/] of the Bureau of Mines made the first inspection. Although the operators had but little mining experience, the trenching operation was completed with fair efficiency. The rock was of medium hardness and drilling and blasting was required. The first stage of the work could have been done at less expense.

2/ Sheahan, B. H. and Jones, H. W.- Interim Report dated Sept. 24, 1953.

The operators were all employed on work at Long Beach, Calif., and worked at the tungsten prospect intermittently. A miner and mucker were employed on a part time basis from Sept. 23, 1952 to Oct. 22, 1952.

EQUIPMENT PURCHASED FOR PROJECT

No purchase of operating equipment were authorized by the contract and none are listed on the operators monthly report and voubher.

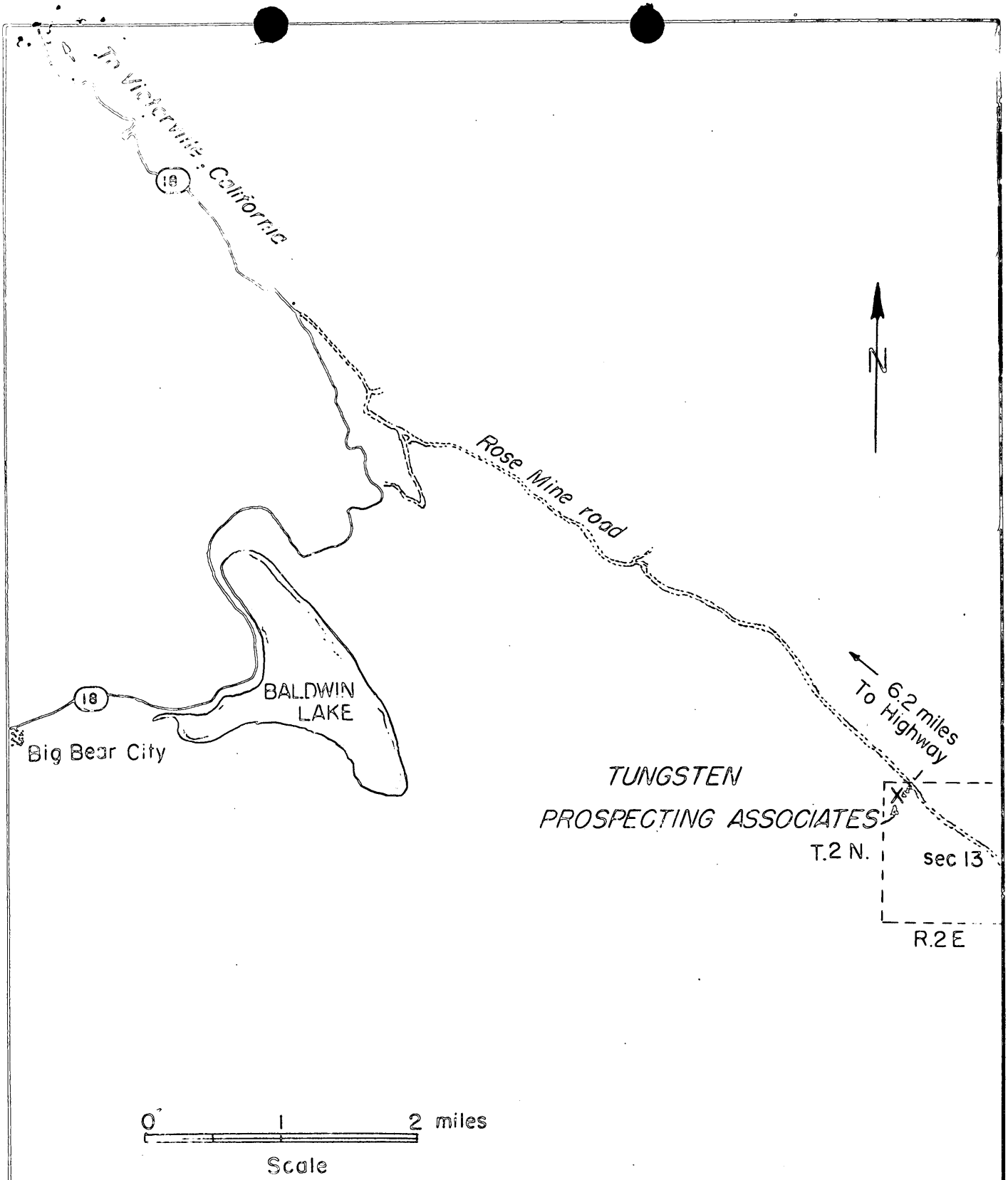

TUNGSTEN PROSPECTING ASSOCIATES, San Bernardino Co. California
DMEA 2310, Idm-E 377

LOCATION SKETCH FIGURE 1

ASSAYS

SAMPLE NUMBERS		WIDTH	%WO_3	
CHECK SAMPLE - U.S.B.M.	OPERATORS SAMPLE -	FEET	U.S.B. MINES sample	OPERATORS sample
S-132	none	4.75	0.02	none
S-133	none	Main Dump	0.02	none
	M.T-A	3.0	–	0.18
	M.T-B	3.0		0.02
	M.T-C	3.0	–	0.81
	M.T-D	2.0	–	0.33
S-142	M.T-E	1.5	0.68	9.64
	M.T-F	2.0	–	0.28
	M.T-G	3.0	–	0.04
	M.T-H	3.0	–	0.05
	M.T-I	2.3	–	0.51
S-140	M.T-J	2.5	0.02	Tr.
	M.T-K	2.7	–	0.04
	M.T-L	2.7		1.19
S-139	M.T-M	3.0	* 0.01	0.03
	C.T.1-B	3.0	–	0.06
S-143	C.T.2-A	2.7	* 0.01	0.02
S-141	C.T.3-A	2.5	* 0.01	Tr
	C.T.4-A	3.0	–	0.15
	C.T.4-B	2.5	–	0.13
S-138	C.T.5-A	1.0	* 0.01	4.04
S-137	C.T.5-B	2.5	* 0.01	0.10
S-136	C.T.6-A	2.0	0.01	0.08
	C.T.6-B	3.0	–	0.10
	C.T.6-C	1.5	–	0.06
	C.T.7-A	6.0	–	0.17

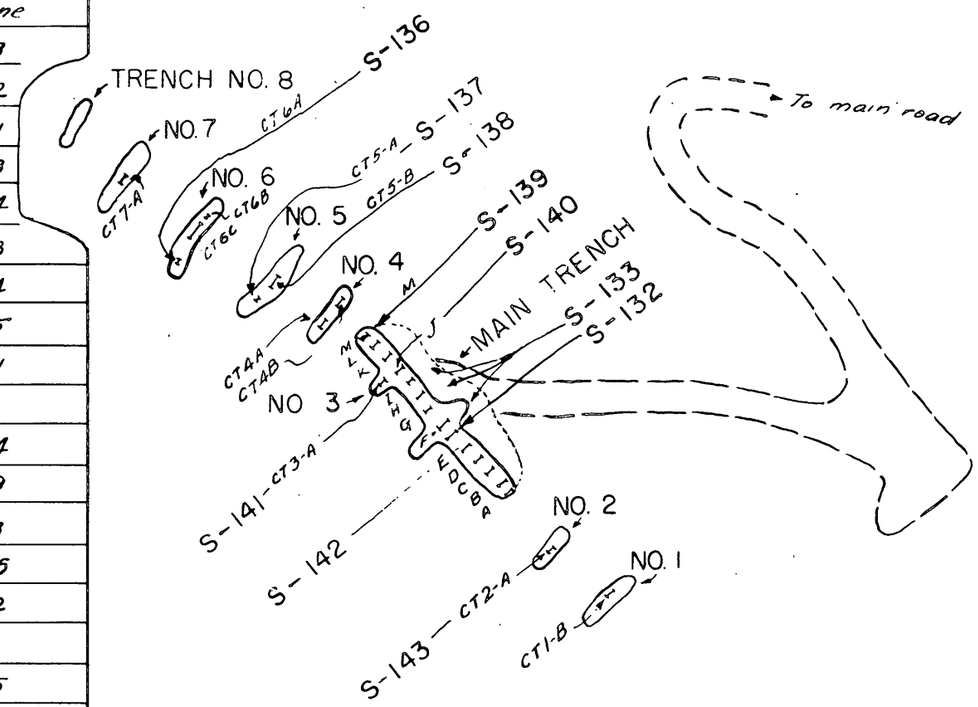

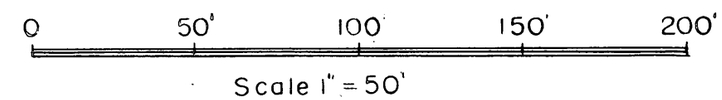

Plan Showing Surface Trenches & Location of Samples

Note: * Indicates less than 0.01%

Sketch to accompany Final Report

TUNGSTEN PROSPECTING ASSOCIATES, DMEA-2310, ldm-E 377

SAN BERNARDINO COUNTY, CALIFORNIA

10/24/52

Figure 2

UNITED STATES
DEPARTMENT OF THE INTERIOR
DEFENSE MINERALS ADMINISTRATION
WASHINGTON 25, D. C.

1012 Flood Building
870 Market Street
San Francisco 2, California

DEPARTMENT OF THE INTERIOR
Defense Minerals Administration
DEC 2[illegible] 1952

December 17, 1952

Mr. Jay L. Chambers, Chief
Contract Administration and
Audit Division
Defense Minerals Exploration
Administration
Washington 25, D. C.

Re: Docket No. DMEA-2310
Contract No. Idm-E377 (377)
Tungsten Prospecting
Associates
Long Beach, California

Dear Mr. Chambers:

An examination has been made of subject Contractor's Monthly Reports (Form MF-104) and supporting documents for the period September 17, 1952 to October 22, 1952, and you will find attached hereto three (3) copies of Report of Review for further distribution by your office.

Reference is made to my letter dated December 5, 1952 and your reply dated December 9, 1952 in connection with $150.00 deposit for Workmen's Compensation insurance. I have received conflicting rulings from three (3) separate insurance companies; one stated that the deposit could be prorated during period of operation; another stated that due to short period of operation it would not pay them to make a refund. I was also informed that insurance companies can make their own rulings on refunds of this description. As the operator claimed that no part of this $150.00 would be refunded I have accepted his statement as being true and correct, therefore no exception has been made.

Sincerely yours,

George Mayor

George Mayor
Auditor

Attachments

FILE COPY
SURNAME:

UNITED STATES
DEPARTMENT OF THE INTERIOR
DEFENSE MINERALS EXPLORATION ADMINISTRATION
WASHINGTON 25, D. C.

Docket No. DMEA 2310 - Tungsten December 12, 1952

Chapman
Selfridge

Iron and Ferro-Alloy Division, DMEA

Notice of termination signed and mailed to Operator on December 3, 1952, by Mr. H. C. Miller, Executive Officer, Region III.
Docket No. DMEA 2310 - Tungsten
Tungsten Prospecting Associates
TPA No. 1 and TPA No. 2 Claims
San Bernardino County, California
Contract I&m-N377, July 30, 1952

Stage I of the contract consisted of 8 trenches cut at 25-feet intervals. Each trench to be sampled as warranted. This work was completed prior to October 24, 1952.

The estimated cost of this Stage was	$1,830.00
The actual cost of the work was	1,676.27
Balance not used	$ 153.73

Results obtained from above trenching did not justify proceeding with Stage II, which was to consist of sinking a shaft 50 feet and drift 40 feet along the vein. This work was estimated to cost $4,870.00.

TLChapman'lm
12/12/52

cc: Admn. Reading File
Docket
G. C. Selfridge
T. L. Chapman

FILE COPY
SURNAME:

800
Talbert
Chambers

UNITED STATES
DEPARTMENT OF THE INTERIOR
DEFENSE MINERALS EXPLORATION ADMINISTRATION
WASHINGTON 25, D. C.

BEW.

DEC 9 1952

Mr. George Mavor
DMEA Auditor, Region III
1012 Flood Building
870 Market Street
San Francisco 2, California

Re: Docket DMEA-2310, Contract Idm-2277
Tungsten Prospecting Associates

Dear Mr. Mavor:

Receipt is acknowledged of your letter of December 5, 1952, in regard to certain charges under the referenced contract.

You are correct in your determination that the premium of $189.63 for the public liability insurance should be disallowed.

The $150.00 deposit for workmen's compensation insurance appears to be, in effect at least, an advance payment for which the Operator is entitled to a partial refund from the California State Compensation Department. Therefore, you should allow compensation insurance costs at only the applicable rates for the period of the project's operation.

Sincerely yours

P.H. 12-9-52

(Signed) J. L. Chambers

Jay L. Chambers, Chief
Contract Administration
and Audit Division

EDTalbert/wb
December 9, 1952

Copy to: Docket
Admr. Reading File
Mr. Chambers

UNITED STATES
DEPARTMENT OF THE INTERIOR
DEFENSE MINERALS ADMINISTRATION
WASHINGTON 25, D. C.
1012 Flood Building
870 Market Street
San Francisco 2, California

December 5, 1952

Mr. Jay L. Chambers, Chief
Contract Administration and
Audit Division
Defense Minerals Exploration
Administration
Interior Building
Washington 25, D. C.

Re: Docket No. DMEA-2310
Contract No. Idm-E-377
Tungsten Prospecting
Associates
Long Beach, California

Dear Mr. Chambers:

Subject Operators submitted their monthly report on Form MF-104 for the period September 17, 1952, to October 22, 1952, in amount of $1,676.27, covering a tungsten exploration project. The aggregate amount of the contract was $6,700.00 and the Government's participation of 75 percent was $5,025.00. This contract was terminated December 3, 1952, as the operation under Stage I of the contract did not prove successful.

A Report of Review will be prepared for the above mentioned MF-104, in amount of $1,676.27, however, there are two (2) insurance premiums included in the costs which I would like to have clarified by your office before making any disallowance for same and the items involved are as follows:

Workmen's Compensation Insurance - Deposit	$ 150.00
Public Liability $25/50,000 and Other than auto $5/25,000 - subject to $50.00 deductible each claim	$ 189.63

The Operator states in a Memo attached to Workmen's Compensation Insurance invoice that "The $150.00 premium is a minimum premium. Should the project go into the second stage, the premium will apply. But none is returnable". I phoned the California State Compensation Department and they intimated that they would

possibly prorate the $150.00 deposit due to the cancellation of the contract. Before requesting the Operator to seek a credit due to cancellation of contract, I would like to know if this procedure is correct or if we should consider the $150.00 deposit as a deposit receivable by the Operator and only accept the applicable payroll insurance rates for the period of operation.

In regard to the Public Liability and Property Damage premium of $189.63, this is entirely disallowed and the Operator may have been confused with the wording of Art. 6, Item 7, which refers to Workmen's Compensation and Employer's Liability Insurance. It is my understanding that these compensation insurance policies include both compensation and employer's liability coverage. The Public Liability and Property Damage coverage is for third parties only and I doubt if DMEA contracts require this type of insurance.

The payroll for the period covered amounted to $712.00, so you can readily see that the above mentioned insurance is extremely high for approximately a one month operation.

I would appreciate receiving your comments on this subject.

Sincerely yours,

George Mavor

George Mavor
Auditor

IN REPLY REFER TO:

G-MD-CF

UNITED STATES
DEPARTMENT OF THE INTERIOR
GEOLOGICAL SURVEY
WASHINGTON 25, D. C.

December 4, 1952

DEPARTMENT OF THE INTERIOR
Defense Minerals Administration
RECEIVED
DEC 8 1952

Memorandum

To: G. C. Selfridge

From: T. P. Thayer

Subject: DMEA 2310 (Tungsten), Tungsten Prospecting Associates. Property about 3.5 miles east of Baldwin Lake, San Bernardino County, California.

On the basis of the interim report by Mr. B. H. Sheahan, there is no reason to continue the project. Only one sample out of ten assayed by the Bureau of Mines contained more than 0.02 percent WO_3, and the scheelite is reported to be very spotty.

The Field Team's original recommendation against an exploration project appears to have been vindicated.

T. P. Thayer

T. P. Thayer

Copy retained 400

DEPARTMENT OF THE INTERIOR
Defense Minerals Administration
RECEIVED
NOV 24 1952

UNITED STATES
DEPARTMENT OF THE INTERIOR
DEFENSE MINERALS EXPLORATION ADMINISTRATION

Office of
Executive Officer
DMEA Field Team
Region III

1012 Flood Building
870 Market Street
San Francisco 2, Calif.

Date: Nov. 19, 1952

Memorandum

To: Operating Committee, DMEA, Interior Bldg., Washington 25, D. C.

From: Executive Officer, DMEA Field Team, Region III

Subject: Interim Inspection Report

Attached are four copies of Interim Report on -

Docket DMEA 2310

Contract Idm-E 377

Commodity Tungsten

Operator - Tungsten Prospecting Associates

Property - Round Valley Mining District
San Bernardino County, Calif.

By Benj. H. Sheahan

Dated November 12, 1952

H. C. Miller
Executive Officer
DMEA Field Team, Region III

Attachment

Copy to: Finance Officer, Region III (With one copy of report)

E. H. Bailey, USGS (With one copy of report)

INTERIM REPORT

Docket No.: DMEA-2310 (tungsten) November 12, 1952

Name and address of operator: Tungsten Prospecting Associates
2409 E. 19th Street
Long Beach 6, Calif.

Name and location of property: Tungsten Prospecting Associates.

The two claims are located at an altitude of about 6300 feet in the NW¼, NW¼ sec. 13, T. 2 N., R. 2 E. (projected) S.B.B.&M., about 3.5 miles east of Baldwin Lake, San Bernardino County, Calif. The property is reached by following State Highway 18 to the junction of the Rose Mine road and following a one lane gravel road 6.2 miles southeasterly. The site of the contract work is a few hundred feet to the southwest of the main road.

Contract No.: Idm-E377

SUMMARY

The property was idle when inspected by an engineer of the U. S. Bureau of Mines on October 24, 1952. A previous inspection of the property was made on Sept. 17, 1952.

The first stage of the exploration work is completed. This work consisted of eight surface trenches approximately three feet deep as shown on figure 1. Samples were taken by the operator as authorized by the contract and included the sampling of the main trench which was excavated prior to the contract.

Check samples taken by the inspecting engineer and analyzed by the U. S. Bureau of Mines contained considerably less tungsten trioxide than those taken by the operator and analyzed by the Ed. Eisenhauer Jr. Company. The sample channels in the trenches were clearly marked by the operator.

The tungsten mineralization at the property is very spotty. There are no ore reserves.

CONCLUSIONS

Scheelite mineralization exposed by surface trenching is not sufficient to warrant the second stage of the exploration work.

RECOMMENDATIONS

The exploration contract should be terminated.

STATEMENT OF WORK COMPLETED

The work completed on the first stage of the exploration contract consisted of the excavation of eight surface trenches approximately 3 feet in width and depth and from 12 to 25 feet in length (see fig. 1). Samples were taken by the operator and analyzed by Ed Eisenhauer Jr. Company, Los Angeles, Calif. Twenty-four sample pulps with specimens were shipped to the U. S. Bureau of Mines, Reno, Nev. A small tool shed was hauled to the property and constructed near the site of the work. The shed was partly completed on October 24, 1952.

COMMENTS ON PROGRESS MADE

The surface trenching was completed during the interval of time between the two inspections of the property or during the latter part of September and the early part of October. The cost of the first stage of the exploration work was $1,676.27 as shown by the operators combined WF-104 statement for September and October. This was less than the maximum allowable by the contract.

OPERATING CONDITIONS

Operating conditions were good and the weather was favorable for surface trenching work. Drilling and blasting was required but the rock was only of medium hardness.

The first stage of the exploration work could have been done at less expense.

GEOLOGY AND MINERALIZATION

The surface trenching exposed very spotty low grade scheelite mineralization along the general strike of the mineralized lens or bedding of the marble. Some very small streaks of scheelite, an inch or more in width and less than a foot in length, apparently contain high tungsten trioxide values, however these occurrences are too few and too small to be of economic importance.

PRODUCTION

Prior to receiving the exploration contract, the operators claimed that they produced 8 tons of ore. This ore was mined from the best part of the mineralization in the main trench. The ore was hauled to the Parker Mill at Barstow, California for milling. Concentrates returned to the producers follows:

265 pounds @ 36.48% WO_3

148 pounds @ 26.36% WO_3

Gangue material in the concentrate contained minerals not associated with the tungsten mineralization at the property according to Mr. Herbert J. Kandell, operator.

A check sample taken by the inspecting engineers of the U. S. Bureau of Mines on Sept. 17, 1952 near where the ore was said to have been mined assayed as follows: S-132 - width 4 feet 9 inches - 0.02% WO_3. This indicates the very spotty nature of the mineralization.

RESULTS OF CHECK SAMPLING AND ASSAYING

Check samples taken by the inspecting engineer indicate that the mineralization is too low grade to be of economic importance. The assays are considerably lower in grade than those taken by the operator.

The only explanation for this difference is that the mineralization is very spotty.

Both the check samples taken by the engineer and the U. S. Bureau of Mine analyses are shown on the attached map with the operators sample and analyses. The location of the operators sample trenches and numbers were clearly marked with red paint by the operator.

OTHER INFORMATION

The first stage of the exploration work added but little to the geologic picture of the prospect.

The property was examined by L. P. Irwin, geologist and M. D. Clark, geologist of the U. S. Geological Survey on February 28, 1952. The conclusion of their examination was that the property did not warrant an exploration loan.

The operator took two high grade samples M.T.E. and CT5A. Judging from the samples taken by the engineer and from the short history of the deposit, this grade of mineralization would soon pinch out.

Benjamin H. Sheahan

Benjamin H. Sheahan
Mining Engineer

ASSAYS

SAMPLE NUMBERS		WIDTH	%WO_3	
CHECK SAMPLE-U.S.B.M.	OPERATORS SAMPLE	FEET	U.S.B. MINES sample	OPERATORS sample
S-132	none	4.75	0.02	none
S-133	none	Main Dump	0.02	none
	M.T.-A	3.0	–	0.18
	M.T.-B	3.0	–	0.02
	M.T.-C	3.0	–	0.81
	M.T.-D	2.0	–	–
S-142	M.T.-E	1.5	0.68	9.64
	M.T.-F	2.0	–	0.28
	M.T.-G	3.0	–	0.04
	M.T.-H	3.0	–	0.05
	M.T.-I	2.3	–	0.51
S-140	M.T.-J	2.5	0.02	Tr.
	M.T.-K	2.7	–	0.04
	M.T.-L	2.7		1.19
S-139	M.T.-M	3.0	* 0.01	0.03
	C.T.1-B	3.0	–	0.06
S-143	C.T.2-A	2.7	* 0.01	0.02
S-141	C.T.3-A	2.5	* 0.01	Tr
	C.T.4-A	3.0	–	0.15
	C.T.4-B	2.5	–	0.13
S-138	C.T.5-A	1.0	* 0.01	4.04
S-137	C.T.5-B	2.5	* 0.01	0.10
S-136	C.T.6-A	2.0	0.01	0.08
	C.T.6-B	3.0	–	0.10
	C.T.6-C	1.5	–	0.06
	C.T.7-A	6.0	–	–

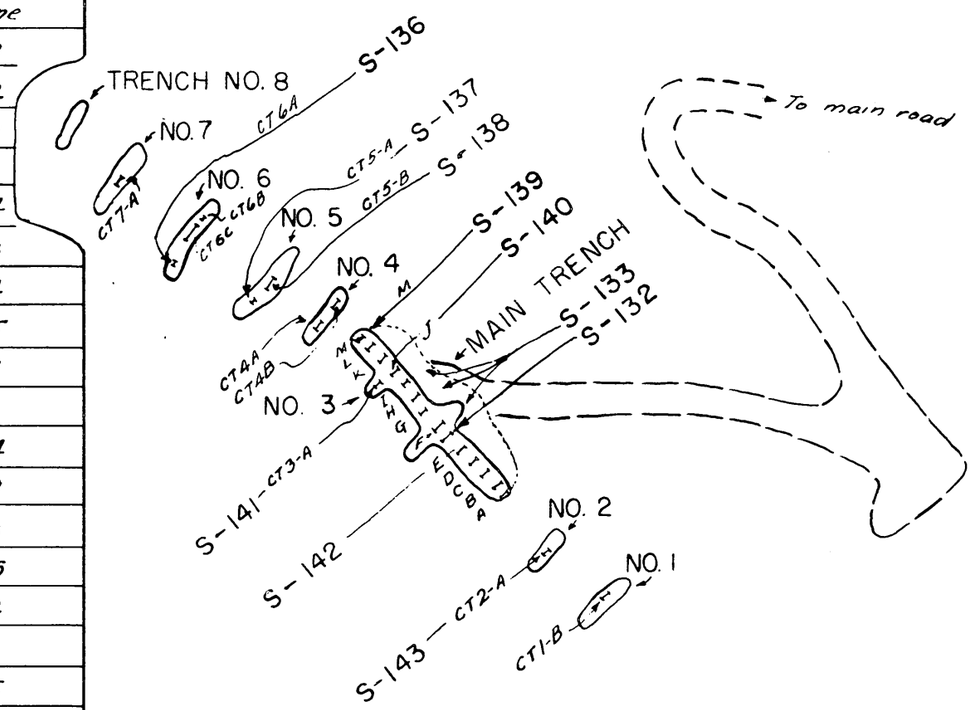

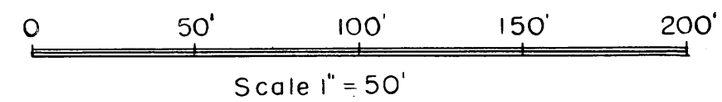

Plan Showing Surface Trenches & Location of Samples

Note: * Indicates less than 0.01%

Sketch to accompany 2nd interim report Nov. 1952

TUNGSTEN PROSPECTING ASSOCIATES, DMEA-2310, ldm-E 377
SAN BERNARDINO COUNTY, CALIFORNIA

10/24/52

Figure 1

Docket

UNITED STATES
DEPARTMENT OF THE INTERIOR
DEFENSE MINERALS EXPLORATION ADMINISTRATION
WASHINGTON 25, D. C.

Office of
Executive Officer
DMEA Field Team
Region III

1012 Flood Building
870 Market Street
San Francisco 2, Calif.

October 15, 1952

Memorandum

To: Frank E. Johnson, Chairman, Operating Committee, DMEA, Interior Building, Washington 25, D. C.

From: Executive Officer, DMEA Field Team, Region III

Subject: Docket DMEA 2310 (Tungsten), Contract Idm-E377, Tungsten Prospecting Associates, TPA No. 1 and TPA No. 2 Claims, San Bernardino County, California

Before I had a chance to act upon your subject letter, dated October 13, 1952, a letter of the same date arrived from Mr. Herbert J. Kandel, informing me of the progress being made under Contract Idm-E377. A copy of Mr. Kandel's letter is attached hereto.

I do not believe that it is necessary to amend the contract as you suggested might need be done, because previous correspondence from the Operator indicates that preparations for carrying out the work were started within the thirty-day time limit.

I note that you suggest that we get, if possible, the assay results from the 8 tons shipped. Mr. A. C. Johnson is getting a copy of this memorandum, so he will know of your suggestion and will act upon it, if possible.

Copy retained 400

H. C. Miller
Executive Officer
DMEA Field Team, Region III

Attachment

Copy to E. H. Bailey, USGS
A. C. Johnson, Reno, Nevada

OCT 2 1952

case 10.21

COPY

2409 E. 19th St.
Long Beach 6, Calif.
October 13, 1952

GCS
10/24/52

Mr. H. C. Miller, Executive Officer
DMEA Field Team, Region III
1012 Flood Building
870 Market Street
San Francisco 2, Calif.

Re: DMEA 2310 (Tungsten)
Contract Idm-E377
Tungsten Prospecting Assoc.
San Bernardino County, Cal.

Dear Sir:

This is to inform you of our progress under the above referenced project.

We have completed the eight cross trenches required in Stage I. Sampling is well under way with some five samples in the hands of Ed Eisenhauer, Assayer. We estimate that all samples will be at the assayer by the end of this week.

At the instructions of Mr. Sheahan, we have requested Mr. Eisenhauer to forward the "pulps" to Reno.

Since this stage will be completed in somewhat less than a month from our beginning work, we will submit one set of vouchers for the whole stage rather than split it up into two very short periods.

The main vein appears to widen out to about 15 feet North west of the area originally exposed. However, it does not lamp as rich as the narrower section. The trench most northwesterly was located acress a gully and in such deep overburden that it was not completed. At five foot depth no bedrock was contacted. As our instructions specified approximately three feet we did not finish this trench.

Yours very truly,

/s/ Herbert J. Kandel

Copy to: Mr. A. C. Johnson
Mining Division
Region III

FILE COPY 400
SURNAME:

Chapman
Selfridge

UNITED STATES
DEPARTMENT OF THE INTERIOR
DEFENSE MINERALS EXPLORATION ADMINISTRATION
WASHINGTON 25, D. C.

OCT 13 1952

Mr. H. C. Miller
Executive Officer, Region III
1012 Flood Building
870 Market Street
San Francisco 2, California

Re: Docket No. DMEA 2310 - Tungsten
Tungsten Prospecting Associates
TPA No. 1 and TPA No. 2 Claims
San Bernardino County, California
Idm-E377

Dear Mr. Miller:

This acknowledges receipt of the Interim Report by B. H. Sheahan, dated September 24, 1952, on the above referred to project.

We note that no work on the project has been done to date. As the work was supposed to start 30 days after the contract date, we would like to know the reason for this delay. If the Operators plan to go ahead on the project, it will be necessary to amend the contract as to time of starting and ending of project.

You advise us in this report that the applicants have completed 93 feet of trenching to a depth of 5 feet. As Stage I of the contract only called for cross trenching over a length of 200 feet, would not most of this length be covered by the above work?

If possible, we believe it would be advisable to try and get the assay results from the 8 tons shipped.

If 8 tons of ore was sorted out of the material from the excavation, we do not see how a grab sample of the discard would be of any value.

We realize that Mr. Irwin and Mr. Clark of the U. S. Geological Survey recommended denial of the application, but they make the following statement in their report:

"At the southeast face of the open cut the 3-foot section of ore is estimated to contain 5.0 percent WO_3. The

flanking bodies lamp about 0.5 percent WO_3 in the same cut. The central body can be traced 30 feet in the open cut and small pit to the southeast. It is estimated that the average grade of ore for that length is between 1 and 2 percent WO_3 over an average width of 2 feet. The small cut about 50 feet northwest of the main open cut is scheelite bearing rock that contains about 0.1 percent WO_3. No other exposures of scheelite bearing rock were seen, but scattered grains of scheelite were found in the overburden for distances of 50 feet southeast and 200 feet northwest of the main open cut."

We considered a showing such as this was a good prospect, in fact, it seemed much better than showings on some prospects. While, of course, this property has no chance of making a large operation, the chances of producing a fair amount of tungsten and repaying the loan seemed good.

If the Operators do not start work in the near future, it probably would be advisable to inform them that the contract will be cancelled.

Sincerely yours,

(signed) FRANK E. JOHNSON

Chairman, Operating Committee (JHB)

S.H. 10.13.52

Approved:

J. H. Hodges (JHB)

Member, Bureau of Mines

K. P. Thayer (JHB)

Member, Geological Survey

TLChapman'lm
10/8/52

cc: Admn. Reading File
Docket
R. W. Geehan, USBM
D. M. Lemmon, USGS
Field Team Reg. III
Operating Committee
G. C. Selfridge
T. L. Chapman

Office of
Executive Officer
DMEA Field Team
Region III

UNITED STATES
DEPARTMENT OF THE INTERIOR
DEFENSE MINERALS EXPLORATION ADMINISTRATION
WASHINGTON 25, D.C.

DEPARTMENT OF THE INTERIOR
Defense Minerals Administration
RECEIVED
OCT 14 1952

1012 Flood Bldg.
870 Market St.
San Francisco 2, Calif.

October 10, 1952

Memorandum

To: Operating Committee, DMEA, Interior Building, Washington 25, D. C.

From: Executive Officer, DMEA Field Team, Region III

Subject: Interim Inspection Report

On September 29 we sent to your office four copies of Interim Report on Docket DMEA 2310, Contract Idm-E377, Tungsten Prospecting Associates (Tungsten), made on September 24, 1952, by Mr. Benjamin H. Sheahan. The samples taken by Mr. Sheahan have now been analyzed and the results were as follows:-

Sample No.	% WO_3	Description
S-132	0.02	4' 9" cut
S-133	0.02	Grab sample of dump

Kindly make this memorandum a part of the Interim Report.

H. C. Miller
Executive Officer, DMEA Field Team
Region III

Copy to: Finance Officer, Region III
E. H. Bailey, USGS

UNITED STATES
DEPARTMENT OF THE INTERIOR
Defense Minerals Exploration Administration

DEPARTMENT OF THE INTERIOR
Defense Minerals Administration
RECEIVED
OCT 3 1952

Office of
Executive Officer
DMEA Field Team
Region III

1012 Flood Building
870 Market Street
San Francisco 2, Calif.

Date: September 29, 1952

Memorandum

To: Operating Committee, DMEA, Interior Building, Washington 25, D. C.

From: Executive Officer, DMEA Field Team, Region III

Subject: Interim Inspection Report

Attached are four copies of Interim Report on -

Docket DMEA 2310

Contract Idm-E 377

Commodity Tungsten

Operator - Tungsten Prospecting Associates

Property - San Bernardino County, California

By Benjamin H. Sheahan

Dated September 24, 1952

H. C. Miller
Executive Officer
DMEA Field Team, Region III

Attachment

Copy to: Finance Officer, Region III (with one copy of report)
E. H. Bailey, USGS (with one copy of report)

DEPARTMENT OF THE INTERIOR
Defense Minerals Administration
RECEIVED
OCT 3 1952

gdl
10/7/52

INTERIM REPORT

Docket No.: DMEA-2310 (tungsten) September 24, 1952

Name and address of operator: Tungsten Prospecting Associates
2409 E. 19th Street
Long Beach 6, California

Name and location of property: Tungsten Prospecting Associates. The two claims are located at an altitude of about 6300 feet in the NW¼ NW¼ sec. 13, T. 2 N., R. 2 E., (projected) S.B.B.&M., about 3.5 miles east of Baldwin Lake, San Bernardino County, Calif. The property is reached by following State Highway 18 to the junction of the Rose Mine road and following a one lane gravel road 6.2 miles southeasterly. The site of the contract work is a few hundred feet to the southwest.

Contract No.: Idm-E377

SUMMARY

The property was inspected by engineers[1] of the U. S. Bureau of Mines on September 17, 1952.

No work was done on contract Idm-E377. Two of the partners, H. J. Kandel and J. R. Stevenson said that they planned to hire a crew to commence the first stage of the exploration work in the near future.

Exploration work completed by the partners on their own account consisted of 93 feet of shallow open cut trenching exposing slightly mineralized scheelite bearing rock along the strike of the formation to a depth of 5 feet.

Eight tons of the best scheelite bearing rock was reported to have been mined from the deposit. The operators did not state the average grade of this shipment, however, they said that custom mill returns were disappointing because of low values.

1/ Benjamin H. Sheahan and Henry W. Jones.

CONCLUSIONS

Exploration work outlined by the contract is not justified because of the small size and grade of the scheelite occurrences.

RECOMMENDATIONS

Further prospecting together with sampling and assaying seems justifiable since the contract has already been approved.

The exploration work should be discontinued early in the first phase of the work.

STATEMENT OF WORK COMPLETED

There has been no work completed on contract Idm-E377.

COMMENTS ON PROGRESS MADE, UNUSUAL CIRCUMSTANCES

The operators hauled a house trailer to a location along the road near the site of the exploration work.

There were no workmen at the property.

The two partners interviewed at the property apparently have had but little mining experience. They arrived at the claims while the inspection was being conducted.

Exploration work that has been completed by the partners on their own account has exposed the formation sufficiently to show that the scheelite occurrence is even weaker than when it was examined by geologists[2/] of the U. S. Geological Survey in February 1952.

Sampling:

Sample S-132 was taken across 4 feet 9 inches of the best section of the scheelite mineralization.

Sample S-133 was a grab sample from the entire excavation and represents the approximate grade of the deposit.

2/ W. P. Irwin and L. D. Clark.

Lamping with ultra-violet light showed that the scheelite mineralization was very weak and fading out toward the ends of the main open cut. (See sketch map).

Sample analyses have not been determined but will be forwarded when available.

The allowable charges for doing the first stage of the contract exploration work are excessive.

Benjamin H. Sheahan

Benjamin H. Sheahan
Mining Engineer

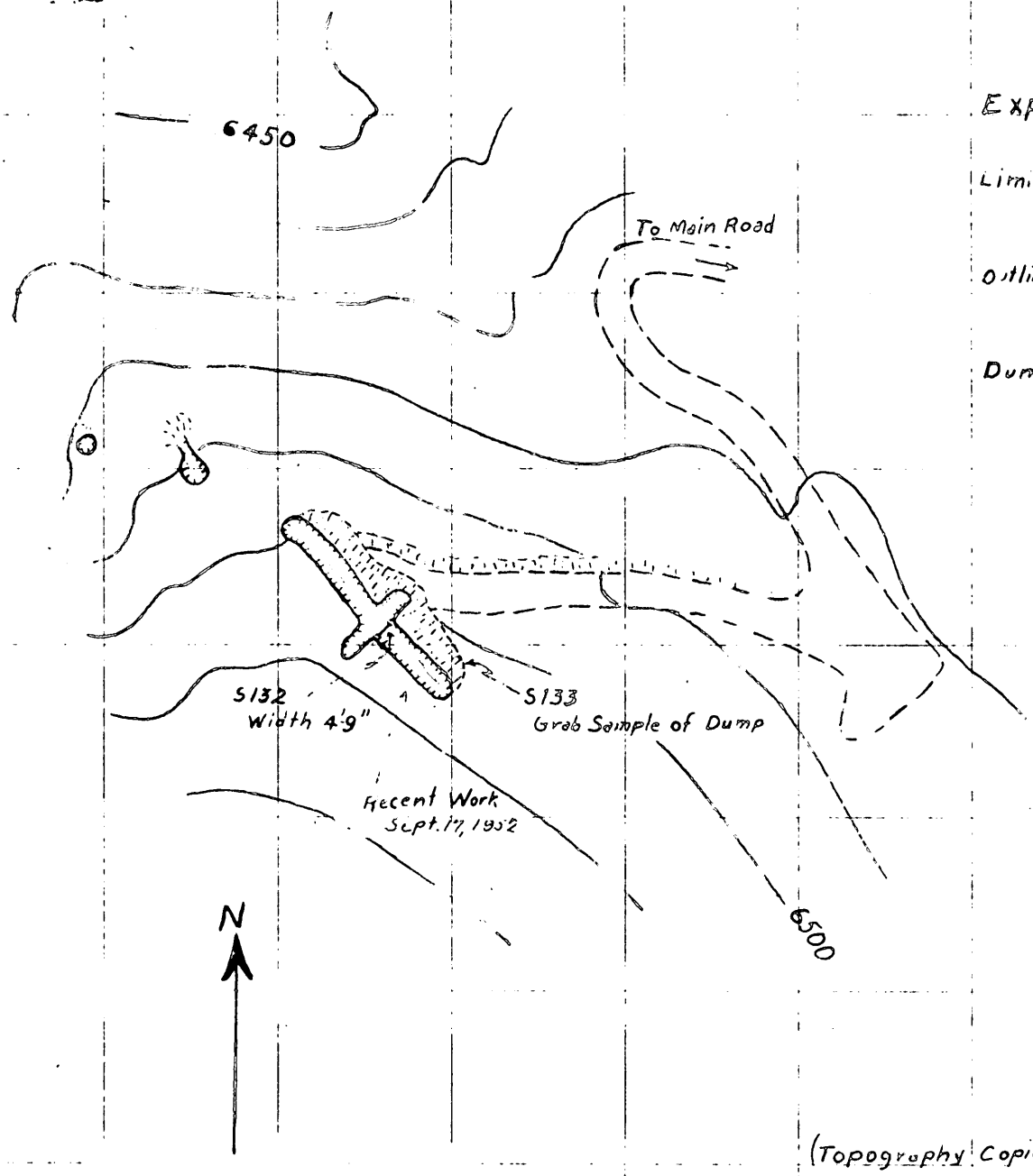

Explanation

Limit of exposure

Outline of open cut or pit

Dump

(Topography Copied from U.S.G.S. Map)
Mapped by W.P. Irwin and L.D. Clark
February 28, 1952

Tungsten Prospecting Associates Claim No. 1, San Bernardino County, California

0 50 100 150

Contour Interval 10 feet

UNITED STATES
DEPARTMENT OF THE INTERIOR
DEFENSE MINERALS EXPLORATION ADMINISTRATION
WASHINGTON 25, D. C.

DEPARTMENT OF THE INTERIOR
Defense Minerals Administration
RECEIVED
SEP 30 1952

Office of
Executive Officer
DMEA Field Team
Region III

1012 Flood Building
870 Market Street
San Francisco 2, Calif.

September 26, 1952

Mr. Herbert J. Kandel
Tungsten Prospecting Associates
2409 East 19th Street
Long Beach 6, California

Re: Docket DMEA 2310 (Tungsten)
Contract Idm-E377
Tungsten Prospecting Associates
San Bernardino County, California

Dear Mr. Kandel:

Reference is to your letter, dated September 20, informing us that our Inspection Engineer, Mr. Benjamin Sheahan, has requested that you take an additional fourteen (approximately) samples of the vein you have exposed in your exploration operations.

You are correct in assuming that under the provisions of Article 5 of the contract, no amendment will be required for you to take these additional samples. Article 5 of the long contract form (MF-200-Revised 2/1952) such as you have is a concise statement of the matter. No amendment of a contract is required to enable the Government to participate in such excess costs under the provisions of the contract. The engineers and executive officers' signatures on the pertinent MF-104 is the only approval required.

Sincerely yours,

H. C. MILLER

H. C. Miller
Executive Officer
DMEA Field Team, Region III

Copy to DMEA, Interior Building, Washington 25, D. C.
E. H. Bailey, USGS
A. C. Johnson, Reno, Nevada

Copy retained 400
George C. Selfridge

UNITED STATES
DEPARTMENT OF THE INTERIOR
DEFENSE MINERALS EXPLORATION ADMINISTRATION
WASHINGTON 25, D. C.

DEPARTMENT OF THE INTERIOR
Defense Minerals Administration
RECEIVED
SEP 29 1952

Office of
Executive Officer
DMEA Field Team
Region III

1012 Flood Building
870 Market Street
San Francisco 2, Calif.

September 24, 1952

Memorandum

To: Frank E. Johnson, Chairman, Operating Committee, DMEA, Interior Building, Washington 25, D. C.

From: Executive Officer, DMEA Field Team, Region III

Subject: Docket DMEA 2310 (Tungsten), Contract Idm-E377, Tungsten Prospecting Associates, San Bernardino County, California

Reference is made to your subject letter, dated September 10, 1952 and to my letter of September 18 to Mr. Herbert J. Kandel with which I sent copies of an amendment to the subject contract approving the subcontracting of the work under Exploration Project Contract Idm-E377.

We now have a reply from Mr. Kandel and the return of all copies of the amendment unsigned. Mr. Kandel informs me that his Company is carrying out the work as called for under the contract and will not subcontract any of it.

Copy retained 400

H. C. Miller
Executive Officer
DMEA Field Team, Region III

Copy to E. H. Bailey, USGS
A. C. Johnson, Reno, Nevada

9/25/52

UNITED STATES
DEPARTMENT OF THE INTERIOR
DEFENSE MINERALS EXPLORATION ADMINISTRATION
WASHINGTON 25, D. C.

Office of
Executive Officer
DMEA Field Team
Region III

1012 Flood Building
870 Market Street
San Francisco 2, California

September 18, 1952

Mr. Herbert J. Kandel
Tungsten Prospecting Associates
2409 East 19th Street
Long Beach 6, California

Re: Docket DMEA 2310 (Tungsten)
Contract Idm-E377
Tungsten Prospecting Associates
San Bernardino County, California

Dear Mr. Kandel:

On August 20, 1952, I wrote you that no approval is needed from the Government to subcontract the work to be done by you under your exploration project contract. I now have a letter from Mr. Frank E. Johnson, Chairman, Operating Committee, Defense Minerals Exploration Administration, Washington, D. C., advising me that the Chief Counsel of DMEA has ruled that my interpretation was in error and that an amendment is necessary.

Accordingly, an amendment to your contract has been prepared and six copies of the amendment are enclosed. Kindly sign all six copies and return the original and four copies to me. The sixth copy is for your files.

Your agreement with the subcontractors will have to be approved by this office and for that purpose we will have to have five executed copies of the agreement. Kindly let us have these copies as soon as you sign up with your subcontractors.

Sincerely yours,

H. C. MILLER
H. C. Miller
Executive Officer
DMEA Field Team, Region III

Enclosure

Copy to: DMEA
E. H. Bailey
A. C. Johnson

DEPARTMENT OF THE INTERIOR
DEFENSE MINERALS EXPLORATION ADMINISTRATION
RECEIVED
SEP 22 1952

9/17/52

UNITED STATES
DEPARTMENT OF THE INTERIOR
DEFENSE MINERALS EXPLORATION ADMINISTRATION
WASHINGTON 25, D. C.

Office of
Executive Officer
DMEA Field Team
Region III

1012 Flood Building
870 Market Street
San Francisco 2, Calif.

September 12, 1952

Mr. Herbert J. Kandel
Tungsten Prospecting Associates
2409 E. 19th Street
Long Beach 6, California

Re: Docket DMEA 2310 (Tungsten)
Contract Idm-E377
Tungsten Prospecting Associates
San Bernardino County, California

Dear Mr. Kandel:

I acknowledge your letter of September 5, informing us that though you see no reason why you cannot complete the work specified in the contract within the stipulated four months from July 30, 1952, you will not be able to complete Stage I within 0 - 1 month of the date of the contract.

It is my interpretation of your contract that the indicated time schedule does not necessarily mean that Stage I has to be completed within 0 - 1 month of the date of the contract. Time schedules, as I understand it, are put in the contracts as an indication to the operator of the approximate length of time that it should take to do the work. In other words, the Washington Office of the Defense Minerals Exploration Administration believes that work under Stage I of your contract should be completed in not over one month's time and that it will take one to three months to do the work specified under Stage II.

As we believe you are making a diligent effort to get started on the work and that you will complete the total job within four months from the date of the contract, no amendment, extending the time of completion of Stage I is needed.

Sincerely yours,

H. C. MILLER

H. C. Miller
Executive Officer
DMEA Field Team, Region III

Copy to DMEA, Interior Building
A. C. Johnson, Reno, Nevada
E. H. Bailey, USGS

FILE COPY
SURNAME:

Martin
Mittenthal

UNITED STATES
DEPARTMENT OF THE INTERIOR
DEFENSE MINERALS EXPLORATION ADMINISTRATION
WASHINGTON 25, D. C.

SEP 10 1952

Mr. H. C. Miller
Executive Officer, Region III
1012 Flood Building
870 Market Street
San Francisco 2, California

Re: Docket No. DMEA 2310 - Tungsten
Tungsten Prospecting Associates
TPA No. 1 and TPA No. 2 Claims
San Bernardino County, California
Contract Min-2377

Dear Mr. Miller:

Reference is made to your letter of August 20, 1952, to Mr. N. J. Kandel, Tungsten Prospecting Associates, 2409 East 19th Street, Long Beach 6, California.

As you will recall, Mr. Kandel wrote to you to ask if an amendment to the subject contract would have to be written to permit his subcontracting of the work described in Exhibit "A". The work, in brief, consists of trenching and sampling, Stage I, followed by contingent shaft sinking and drifting, Stage II. The total cost of the project is estimated at $6,700.00.

In your above letter, you replied to Mr. Kandel:

"As your contract is written on MM-200 form, (Revised Feb. 1952), and it is not specifically stated in the exhibit that subcontracts must be consented to and approved by the Government, no approval is needed by you to subcontract the work."

In order to obtain an interpretation of the contract, we referred your same letter to our Chief Counsel who replied as follows:

"Article 4(b) of the contract provides in substance that if it is stated in Exhibit "A" that an independent contract requires the Government's approval, the Government may refuse to participate in the cost thereof until such approval has been given.

"If, in this case, provision for independent contracts for any part of the work had been made in Exhibit "A", the Executive Officer would have been correct in writing to the Operator that the subcontract in question would not require the Government's approval since no approval had been provided for. However, on the contrary, Exhibit "A" distinctly states that there are to be no such independent contracts. Consequently, before a subcontract may be entered into, the contract must be amended accordingly. Consequently, you should inform Mr. Miller that his letter to the Operator was in error, and that an amendment to the contract is necessary."

Sincerely yours,

Signed J.H. 9-10-52

Chairman, Operating Committee

Approved:

J. H. Hedges

Member, Bureau of Mines

F. T. MacKnight

Member, Geological Survey

WSMartin'lm
9/8/52

cc: Admn. Reading File
Docket
R. W. Geehan, USBM
D. M. Lemmon, USGS
Field Team Reg. III
Operating Committee
W. S. Martin

"If, in this case, provision for independent contracts for any part of the work had been made in Exhibit "A", the Executive Officer would have been correct in writing to the Operator that the subcontract in question would not require the Government's approval since no approval had been provided for. However, on the contrary, Exhibit "A" distinctly states that there are to be no such independent contracts. Consequently, before a subcontract may be entered into, the contract must be amended accordingly. Consequently, you should inform Mr. Miller that his letter to the Operator was in error, and that an amendment to the contract is necessary."

Sincerely yours,

Signed S.H. 9-10-52

Chairman, Operating Committee

Approved:

J. H. Hedges

Member, Bureau of Mines

F. T. MacKnight

Member, Geological Survey

WSMartin'lm
9/8/52

cc: Admn. Reading File
Docket
R. W. Geehan, USBM
D. M. Lemmon, USGS
Field Team Reg. III
Operating Committee
W. S. Martin

140

FILE COPY
SURNAME:

AEKane

UNITED STATES
DEPARTMENT OF THE INTERIOR
DEFENSE MINERALS ADMINISTRATION
WASHINGTON 25, D. C.

September 4, 1952

Memorandum

To: Mr. W. S. Martin, Acting Chief
Iron and Ferro-Alloy Division

From: Chief Counsel

Subject: Tungsten Prospecting Associates, Docket No. DMEA 2310
Contract No. Idm-E377

Reference is made to your memorandum of August 28 regarding the proposed subcontract in this case.

Article 4(b) of the contract provides in substance that if it is stated in Exhibit "A" that an independent contract requires the Government's approval, the Government may refuse to participate in the cost thereof until such approval has been given.

If, in this case, provision for independent contracts for any part of the work had been made in Exhibit "A", the Executive Officer would have been correct in writing to the Operator that the subcontract in question would not require the Government's approval since no approval had been provided for. However, on the contrary, Exhibit "A" distinctly states that there are to be no such independent contracts. Consequently, before a subcontract may be entered into, the contract must be amended accordingly. Consequently, you should inform Mr. Miller that his letter to the Operator was in error, and that an amendment to the contract is necessary.

J. L. Hofflund
Chief Counsel

Attachment

AEKane/em/mef
cc to: Mails and Files
Adm. R. File
Mr. Hofflund
Mr. Kane
Chron.

FILE COPY
SURNAME:

UNITED STATES
DEPARTMENT OF THE INTERIOR
DEFENSE MINERALS EXPLORATION ADMINISTRATION
WASHINGTON 25, D. C.

Chief Counsel, DMEA

August 28, 1952

Martin

Iron and Ferro-Alloy Division, DMEA

Proposed subcontract
Docket No. DMEA 2310 - Tungsten
Tungsten Prospecting Associates
San Bernardino County, California
Contract No. Idm-E-377

Attached is DMEA copy of letter of August 20, 1952, from Mr. H. C. Miller, Executive Officer, DMEA Field Team, Region III, to Mr. H. J. Kandel, Tungsten Prospecting Associates, 2409 East 19th Street, Long Beach, California.

Mr. Kandel wrote to Mr. Miller to ask if an amendment to the contract would have to be written to permit the subcontracting of the work described in Exhibit "A" The work, in brief, consists of trenching and sampling, Stage I, followed by contingent shaft sinking and drifting, Stage II. The total cost of the project is estimated at $6,700.00.

We note particularly that Mr. Miller replied:

> "As your contract is written on MF-200 form, (Revised Feb. 1952), and it is not specifically stated in the exhibit that subcontracts must be consented to and approved by the Government, no approval is needed by you to subcontract the work."

It will be appreciated if you will advise us whether the above is in accordance with your interpretation of the contract.

Acting Chief
Iron and Ferro-Alloy Division

Attachment

WSMartin:ls

Copy to: Docket
Admn. Read. File
W. S. Martin

UNITED STATES
DEPARTMENT OF THE INTERIOR
DEFENSE MINERALS EXPLORATION ADMINISTRATION
WASHINGTON 25, D. C.

Office of
Executive Officer
DMEA Field Team
Region III

1012 Flood Bldg.
870 Market St.
San Francisco 2, Calif.

August 26, 1952

Memorandum

To: Operating Committee, DMEA, Interior Building, Washington 25, D. C.

From: Executive Officer, DMEA Field Team, Region III

Subject: Docket DMEA-2310 - Tungsten - Contract Idm-E377
Tungsten Prospecting Associates
San Bernardino County, California

Reference is made to Mr. G. C. Selfridge's letter of July 30, transmitting to this office the original and five copies of captioned contract.

The contract has been executed on the part of the Operator and one copy retained by him. Proper distribution has been made of the Field Team and Finance Office copies, and the original and two remaining copies are returned herewith.

H. C. Miller
Executive Officer, DMEA Field Team
Region III

Attachment

Copy to: E. H. Bailey, USGS
A. C. Johnson, Reno (With Field Team's copy of contract)
L. L. Norvell (With Finance Officer's copy of contract)

UNITED STATES
DEPARTMENT OF THE INTERIOR
DEFENSE MINERALS EXPLORATION ADMINISTRATION
WASHINGTON 25, D. C.

Office of
Executive Officer
DMEA Field Team
Region III

1012 Flood Building
870 Market Street
San Francisco 2, Calif.

August 20, 1952

Mr. H. J. Kandel
Tungsten Prospecting Associates
2409 East 19th Street
Long Beach 6, California

Re: Docket DMEA 2310 - Tungsten
Tungsten Prospecting Associates
San Bernardino County, Calif.
Contract Idm-E377

Dear Mr. Kandel:

We acknowledge receipt of the five signed copies of your Exploration Project Contract.

We note by your covering letter that you intend to, or are planning to subcontract the work outlined in Exhibit "A" and are wondering if an amendment to your contract is needed to permit you to do so. As your contract is written on MF-200 form, (Revised Feb. 1952), and it is not specifically stated in the exhibit that subcontracts must be consented to and approved by the Government, no approval is needed by you to subcontract the work.

In connection with your contract, we neglected to fill in the needed information in Article 3, therefore, will you kindly return your copy of the contract to us, so we may insert in that article the information that work on the project is to start within thirty days from the date of the contract and be completed within a period of four months. We will then send your copy to you by return mail.

Sincerely yours,

H. C. MILLER

H. C. Miller
Executive Officer
DMEA Field Team, Region III

Copy to DMEA, Interior Building, Washington 25, D. C.
L. H. Bailey, USGS

AUG 2 0 1952

Copy retained 400

FILE COPY
SURNAME:

140

UNITED STATES
DEPARTMENT OF THE INTERIOR
DEFENSE MINERALS EXPLORATION ADMINISTRATION
WASHINGTON 25, D. C.

AEKane

August 5, 1952

Mr. Herbert J. Kandel
2409 E. 19th Street
Long Beach 6, California

Dear Mr. Kandel:

Reference is made to your letter to me of August 3 inquiring as to the status of the proposed exploration project contract with Tungsten Prospecting Associates, Docket No. DMEA-2310.

Please be advised that this contract was prepared and on July 30 was forwarded to Mr. H. C. Miller, Executive Officer, DMEA Field Team, Region III, San Francisco, California, for execution by the applicant.

Sincerely yours,

J. L. Hofflund

8/6/52

J. L. Hofflund
Chief Counsel

AEKane/em

Copy to: Mails and Files
G. C. Selfridge
J. L. Hofflund
A. E. Kane
chron.

2409 E. 19th St
Long Beach 6, Calif.
August 3, 1952

Mr. J.L. Hofflund, Chief Counsel
Defense Minerals Exploration Adminstration
U.S. Dept of the Interior
Washington 25, D.C.

Re: Docket No.DMEA-2310
Tungsten Claims

Dear Sir:

I refer to your letter of June 26, 1952. We answered your queries, but expected a reply or action sooner.

On the assumption that our previous reply did not reach you, the information is herein repeated.

We are an unorganized association of individuals, and are prepared to each individually sign the contract if offered.

Our claims are snowed in for three winter months. You can understand our impatience to ascertain if we have the loan, for we want to accomplish as much as possible before the snow.

Yours very truly,

Herbert J. Kandel

Herbert J. Kandel for the
Tungsten Prospecting Associates

Docket 400
FILE COPY
SURNAME:

Chapman
Selfridge

UNITED STATES
DEPARTMENT OF THE INTERIOR
DEFENSE MINERALS EXPLORATION ADMINISTRATION
WASHINGTON 25, D. C.

JUL 30 1952

Mr. H. C. Miller
Executive Officer, Region III
1012 Flood Building
870 Market Street
San Francisco 2, California

Re: Docket No. DMEA 2310 - Tungsten
Tungsten Prospecting Associates
San Bernardino County, California

Dear Mr. Miller:

We are enclosing the original and five copies of the above referenced exploration contract signed by this office for the Government, together with Exhibit "A" (5 pages) and a sketch map showing the proposed exploration work.

If the terms and conditions of this contract are satisfactory to you and the Operator, all six copies should be signed by each member of the Association. One copy is to be given to the Operator, one copy retained by your office, and the original and three copies returned to this office.

If any part of this contract does not have either your approval or that of the Operator and cannot be amended within your delegated authority, then the original and all copies of the contract are to be returned to this office, together with the proposed changes for consideration.

Please note that the following major changes have been made in the application as originally presented:

1. The application was for trenching and a 200 feet crosscut adit to cut the mineralized zone at depth, at a cost of $7,355.00.

2. The contract as written calls for trenching, 50 feet of shaft sinking and 40 feet of drifting. This has been concurred in by the applicant. The shaft sinking and drifting will be dependent on the results obtained from trenching.

UNITED STATES
DEPARTMENT OF THE INTERIOR
DEFENSE MINERALS ADMINISTRATION
WASHINGTON

July 29, 1952

Memorandum

To: Executive Officer, Region III

From: DMEA Operating Committee

Subject: DMEA-2310, Tungsten Prospecting Associates contract

Upon execution of the attached contract, the Field Team will make distribution in accordance with instructions contained in Memorandum No. 10, dated July 24, 1952.

3. The cost is estimated to be $6,700.00.

It will be necessary to fill in the time for starting work and the time of completion when the contract is signed. A maximum of 6 to 8 months should be allowed for completion of work.

Sincerely yours,

George C. Selfridge

ACTING Chairman, Operating Committee (2/3)
Defense Minerals Exploration
Administration

cc
7/30/52

Enclosures

Approved:

J. H. Hedges (2/3)
Member, Bureau of Mines

T. P. Thayer (2/3)
Member, Geological Survey

TLChapman'lm
7/15/52

cc: Admn. Reading File
Docket
R. W. Geehan, USBM
D. M. Lemmon, USGS
Field Team Reg. III
Operating Committee
G. C. Selfridge
T. L. Chapman

SD

2409 E. 19th Street
Long Beach 6, Calif.
July 7, 1952

Mr J. L. Hofflund, Chief Counsel
Defense Minerals Exploration Administration
Department of the Interior
Washington 25, D.C.

Re: DMEA Docket-2310
Tungsten Prospecting
Associates

Dear Sir:

In reply to your letter of June 26, 1952, we are an unorganized association of individuals.

Yours very truly,

Herbert J. Kandel
Tungsten Prospecting Assoc.

RECEIVED
JUL 11 1952
GENERAL COUNSEL
DEFENSE MINERALS
ADMINISTRATION

DEPARTMENT OF THE INTERIOR
Defense Minerals Administration
RECEIVED
JUL 11 1952

140

FILE COPY
SURNAME:

UNITED STATES
DEPARTMENT OF THE INTERIOR
DEFENSE MINERALS ADMINISTRATION
WASHINGTON 25, D. C.

Code 100

June 26, 1952

2310

Tungsten Prospecting Associates
2409 E. 19th Street
Long Beach, California

N.S. in R. & R.

Gentlemen:

I have prepared for your signature under Docket No. DMEA-2310 an exploration project contract. However, there is nothing in the record before me from which I can ascertain the exact nature of your legal entity, i.e., whether you are a partnership, a corporation, or an unorganized association of individuals. If you are an unorganized association of individuals, each individual will have to sign the contract, and if you are a partnership, it would be preferable that each individual sign the contract.

Please advise me just what you are, and under what particular laws you are organized, if you are organized. If all interested parties are not to sign as individuals, and if you are not incorporated, you will need to have a copy of whatever articles or written organization you will operate under, with a certified extract from the minutes of a meeting authorizing you to enter this contract.

Very truly yours,

J. L. Hofflund

J. L. Hofflund
Chief Counsel

AEKane/JLHofflund/em
~~xAEKxxxxxxx~~

Copy to: Mails and Files
G. C. Selfridge
J. L. Hofflund
E. A. Kane
chron.

Sol

2409 East 19th Street
Long Beach 6, Calif.
May 19, 1952

DEPARTMENT OF THE INTERIOR
Defense Minerals Administration
RECEIVED
MAY 21 1952

Defense Minerals Exploration Administration
U. S. Department of the Interior
Washington 25, D. C.

Att: Mr. G. C. Selfridge, Chief, Iron and Ferro-Alloy Div.

Re: Docket No.DMEA 2310X-Tungsten
TPA No. 1 and TPA No.2 Claims
San Bernadino County,Calif.

Dear Sir:

Pursuant to the request in your letter of May 16, 1952, the following information is presented:

TPA No. 1: Recorded October 9, 1951
Book 322, Page 464
Mining Records
San Bernadino County, Calif.

Proof of Location/Work Recorded
December 7, 1951
Book 323, Page 263
Mining Records
San Bernadino County, Calif.

TPA No. 1 was the original claim on which the loan application was filed. Subsequent to application for loan we filed claims on each end of original claim. TPA No. 2 and TPA No. 3 claims were recorded as follows:

Recorded April 23, 1952
Book 324, Page 447
Mining Records
San Bernadino County, Calif.

Sincerely yours,

Herbert J. Kandel

Herbert J. Kandel, Sec'y
Tungsten Prospecting Associates

FILE COPY
SURNAME:

Chapman
Selfridge

UNITED STATES
DEPARTMENT OF THE INTERIOR
DEFENSE MINERALS EXPLORATION ADMINISTRATION
WASHINGTON 25, D. C.

Air Mail

Mr. H. J. Kandel
Tungsten Prospecting Associates
2409 East 19th Street
Long Beach 6, California

Re: Docket No. DMEA 2310X - Tungsten
TPA No. 1 and TPA No. 2 Claims
San Bernardino County, California

Dear Mr. Kandel:

Please advise us as soon as possible the following concerning your claims:

Date of recording.

Book and page number.

Sincerely yours,

SIGNED

G. C. Selfridge, Chief
Iron and Ferro-Alloy Division

TLChapman'lm
5/15/52

cc: Admn. Reading File
Docket
R. W. Geehan, USBM
D. M. Lemmon, USGS
Field Team Reg. III
G. C. Selfridge
T. L. Chapman

FILE COPY 400
SURNAME:

UNITED STATES
DEPARTMENT OF THE INTERIOR

DEFENSE MINERALS ADMINISTRATION
WASHINGTON 25, D. C.

Chapman
Selfridge.

Mr. John L. Hofflund, Chief Counsel, DMEA

May 15, 1952

Iron and Ferro-Alloy Division, DMEA

Contract for review and final preparation
Docket No. DMEA 2310X - Tungsten
Tungsten Prospecting Associates
TPA No. 1 and TPA No. 2 Claims
San Bernardino County, California

A rough draft of the contract is attached hereto, together with Plate No. 1 showing the proposed work.

The amount of the loan is $6,700.00, of which the Government share is $5,025.00.

G. C. Selfridge, Chief
Iron and Ferro-Alloy Division

Attachments

TLChapman'lm
5/15/52

cc: Admn. Reading File
Docket
G. C. Selfridge
T. L. Chapman

2409 E. 19th Street
Long Beach6, California
May 6, 1952

Defense Minerals Exploration Administration
U.S. Deaprtment of the Interior
Washington 25, D.C.

Re: Docket No. DMEA 2310
Tungsten
T.P.A. No.1 and No 2
Claims, San Bernardino
County, California

Dear Sirs:

We have studied and are agreeable to the alternative program of exploration as outlined by you in your letter of April 30, 1952.

We therefore ask that you give our application further consideration.

Sincerely yours

Herbert J. Kandel, Sec'y
Tungsten Prospecting Associates

DEPARTMENT OF THE INTERIOR
Defense Minerals Administration
RECEIVED
MAY 8 1952

400

FILE COPY
SURNAME:

UNITED STATES
DEPARTMENT OF THE INTERIOR
DEFENSE MINERALS EXPLORATION ADMINISTRATION
WASHINGTON 25, D. C.

Chapman
Selfridge

APR 30 1952

Tungsten Prospecting Associates
Mr. H. J. Kandel
2409 East 19th Street
Long Beach 6, California

Re: Docket No. DMEA 2310 - Tungsten
T.P.A. No. 1 and No. 2 Claims
San Bernardino County, California

Gentlemen:

Your application for exploration assistance has been reviewed by the Iron and Ferro-Alloy Division of the Defense Minerals Exploration Administration. Review of available information concerning the subject claims suggests an alternative program of exploration. This is as follows:

(1) Excavate 8 trenches along the trend of the mineralization at approximately 25-foot intervals. Sample the trenches where warranted.

(2) If the assays of the samples suggest further exploration, then sink a 50-foot shaft and drift approximately 20 feet in either direction at the bottom of the shaft.

The above project would cost between $6,500 and $7,000.

If the above plan of exploration is agreeable to you, will you please so advise us and we will give your application further consideration.

Sincerely yours,

C. O. Mittendorf (for)

Acting Administrator
Defense Minerals Exploration
Administration

P.N.
4.30.52

TLChapman & GCSelfridge:ls
4/29/52

cc: Docket
Admn. Reading File
Field Team, Region 3
G. C. Selfridge
D. M. Lemmon, USGS
R. W. Geehan, USBM

IN REPLY REFER TO:

G-MD-DML

UNITED STATES
DEPARTMENT OF THE INTERIOR
GEOLOGICAL SURVEY
WASHINGTON 25, D. C.

April 22, 1952

Memorandum

To: George C. Selfridge, DMEA

From: D. M. Lemmon, USGS

Subject: Field Report DMEA 2310 - Tungsten
Tungsten Prospecting Associates
Sec. 13, T. 2 N., R. 2 E.
Morongo district, San Bernardino County
California

The TPA Nos. 1 and 2 claims held by J. R. Stevenson and W. F. Deeter (Tungsten Prospecting Associates) were examined February 28, 1952 by L. D. Clark and W. P. Irwin of the Geological Survey. Their report, dated April 3, 1952, recommends denial of the application for an exploration project costing $7,355.20.

According to the Field Team, coarse-grained scheelite with feldspar, scapolite, calcite and sericite is exposed by trenches for a distance of 30 feet and a width of 2 feet. The content of WO_3 is estimated to be 1 to 2 percent although no samples were taken. The mineralized layer is parallel to beds in the marble wallrock and dips 60° SW. Scattered grains of scheelite are present in the overburden along the strike for distances of 50 feet southeast and 200 feet northwest.

The description suggests that the deposit is small but that it does contain some good-grade material. An assay submitted by the applicant showed 2.76 percent of WO_3 in one cut. If the average grade is 2 percent for a length of 30 feet and width of 2 feet, reserves amount to 6 tons per foot of depth (12 units). Ore could be shipped to the Lighthouse Mining Corporation mill at Barstow, California a distance of 80 miles. This custom mill will accept lots of 30 tons or more and pay $36 per contained unit of WO_3, or will mill ores and return concentrates to the producer.

Copy retained 400

The exploration proposal made by the applicant (10 pits at 100-foot intervals and a 200-foot shaft inclined at 20°, in waste) is not acceptable. However, a maximum of 8 pits at 25-foot intervals seems warranted to search for extensions of the ore layer along the strike. After this surface exploration and sampling is completed, a 50-foot shaft, steeply inclined in ore, might be warranted. The total cost of this work might amount to $800 for the 8 pits and $3,000 for the shaft, or a total government participation of $2,850 out of a $3,800 project. This work might be accomplished for less.

Although I agree with the Field Team's philosophy that the applicants' proposal should be rejected because it is not in scale with the mineralization. I am of the opinion that the application cannot be denied completely without making a counter proposal for acceptance or rejection by the applicants.

Dwight M. Lemmon

UNITED STATES
DEPARTMENT OF THE INTERIOR
DEFENSE MINERALS ADMINISTRATION
WASHINGTON 25, D. C.

Office of
Executive Officer
DMEA Field Team
Region III

1012 Flood Building
870 Market Street
San Francisco 2, Calif.

April 8, 1952

Memorandum

To: Defense Minerals Exploration Administration, Interior Building, Washington, D. C.

From: Executive Officer, DMEA Field Team, Region III

Subject: Docket DMEA-2310 (Tungsten) - H. J. Kandel, Tungsten Prospecting Associates -- $7,355.20

Reference is made to the subject "Review of Application for Exploration Assistance", dated February 12, 1952.

Attached are four copies of a report, "DMEA-2310, Tungsten Prospecting Associates, San Bernardino County, California", by W. P. Irwin and L. D. Clark, Geologists, U. S. Geological Survey, dated April 3, 1952.

The examining geologists state that although the deposit contains high-grade ore, it is too small to warrant the relatively extensive exploration proposed by the applicant. Exploration to the extent of several hundred dollars may be warranted, but Government participation in such a small program does not seem to be practical. It is recommended that the applicant's request be denied. Subject docket is being returned herewith.

H. C. Miller
Executive Officer
DMEA Field Team, Region III

Attachment

Copy to E. H. Bailey, USGS

DEPARTMENT OF THE INTERIOR
Defense Minerals Administration
RECEIVED
APR 14 1952

ON-SITE RPT.

UNITED STATES
DEPARTMENT OF THE INTERIOR
OSCAR L. CHAPMAN, SECRETARY

DEFENSE MINERALS EXPLORATION ADMINISTRATION

REPORT OF EXAMINATION BY FIELD TEAM
REGION III

DEPARTMENT OF THE INTERIOR
Defense Minerals Administration
RECEIVED
APR 14 1952

DMEA 2310, Tungsten Prospecting Associates

San Bernardino County, California

W. P. Irwin, Geologist
L. D. Clark, Geologist
U. S. Geological Survey

April 3, 1952

Reviewed by
DMEA OPERATING COMMITTEE
4-18-52
(MB) (date)

Introduction

The Tungsten Prospecting Associates own two claims in the San Bernardino Mountains, San Bernardino County, California. They applied on December 24, 1951, to DMEA for Government participation in a $7,355.20 program to explore the tungsten deposit covered by the claims. In response to a request from DMEA, L. D. Clark and W. P. Irwin of the Geological Survey examined the claims during the afternoon and evening of February 28, 1952, in the company of the applicants, J. R. Stevenson and W. F. Deeter. The deposit contains ore of fairly high grade, but it is small and does not warrant the relatively extensive exploration proposed by the applicant. It is recommended that the loan be denied.

Description of Property

The claims consist of the TPA Nos. 1 and 2, and are at an altitude of 6300 feet in the NW¼ NW¼ sec. 13, T. 2 N., R. 2 E., (projected), SBBM, about 3½ miles east of Baldwin Lake. They are a few hundred feet southwest of the Mt. Rose road, and 5 miles southeast of the junction of the Mt. Rose road with Route 18 near Baldwin Lake.

The center line of the claims trends northwest, and the TPA No. 2 is at the northwest end of the TPA No. 1. The deposit was discovered in October 1951 by Deeter. The workings, consisting of several small open cuts and pits, are on the TPA No. 1 claim (see plate 1 and 2). Only one ton of handsorted ore has been removed from the property.

Geology

The area is underlain by medium-grained marble that ranges from white to bluish-gray in color. The bedding of the marble, which is fairly uniform, strikes northwest and dips 55 to 70 degrees to the southwest.

The tungsten deposit occurs in the marble, and is exposed by a small pit and open cut (see plates 1 and 2). It occurs as three tabular bodies of a very coarse-grained, scheelite-bearing rock that consists chiefly of potash feldspar, scapolite, calcite, plagioclase (?) and sericite. The bodies are parallel to the bedding of the marble. The largest body is 3 feet thick and is flanked by two bodies that are 1 foot thick, one a distance of 1 foot to the northeast, and the other 6 feet to the southwest. The principal occurrence of scheelite is in the 3-foot thick body.

Scheelite is the only tungsten-bearing mineral that was seen. It occurs mainly as dark-gray crystals that are an average of 1 inch in diameter and are as much as 5 inches in length. Few fine grains are present in the main open cut, but are abundant in the small pit a few feet to the southeast. Under ultra-violet light the scheelite fluoresces bluish-white. Although the scheelite contains no molybdenum, powellite is abundant locally, and it is probable that the molybdenum content of the ore is extraordinarily high.

At the southeast face of the open cut (see plate 2) the 3-foot section of ore is estimated to contain 5.0 percent WO_3. The flanking bodies lamp about 0.5 percent WO_3 in the same cut. The central body can be traced 30 feet in the open cut and the small pit to the southeast. It is estimated that the average grade of ore for that length is between 1.0 and 2.0 percent WO_3 over an average width of 2 feet. The small cut about 50 feet northwest of the main open cut is in scheelite-bearing rock that contains about 0.1 percent WO_3. No other exposures of the scheelite-bearing rock were seen, but scattered grains of scheelite were found in the overburden for a distance of 50 feet southeast and 200 feet northwest of the main open cut.

Exploration

The applicant plans to explore the deposit by digging ten trenches and a 200-foot inclined shaft. The trenches are to be across the probable trace of the vein, and at approximately 100-foot intervals. Presumably, most of the trenches are to be northwest of the main open cut. The shaft is to be started at a point about 130 feet north of the main open cut, and inclined about 20 degrees to the south in order to intersect ore body at a depth of 100 feet by passing beneath the main open cut.

The exploration plan is logical from the standpoint of the structure of the deposit, but is much too ambitious considering the indicated size of the deposit. Several shallow trenches spaced at 25-foot intervals northwest and southeast of the main open cut are all that appears to be warranted, as it is doubtful that the ore shoot extends much beyond the indicated 30-foot length. The cost of the trenches would be only a few hundred dollars. This cost seems too small to warrant Government aid, as the applicants have indicated their ability to contribute a much larger sum as their share of the program they proposed.

Although the grade of the ore is fairly high, the indicated size of the deposit is small. It would seem most reasonable for the applicant to sink a shaft in the ore rather than to do extensive exploratory work. The ore mined would probably pay for the operation. By following the ore the attitude of the ore shoot may be determined and, in such case, exploration or development at depth may be feasible.

Recommendation

It is recommended that the applicant's request for a loan be denied.

UNITED STATES
DEPARTMENT OF THE INTERIOR
DEFENSE MINERALS EXPLORATION ADMINISTRATION
WASHINGTON 25, D. C.

Lelfordge
Gunter
Gehlen

FEB 12 1952

Mr. H. C. Miller
Executive Officer, Region III
1012 Flood Building
870 Market Street
San Francisco 2, California

Dear Sir:

We attach "Review of Application for Exploration Assistance" on:

Applicant H. J. Kandel, Tungsten Prospecting Associates

Docket No. 2310

Commodity Tungsten

Amount $ 7,355.20

Please expedite consideration of the application with particular reference to the points raised in the attached "Review".

Sincerely yours,

C. Mutteadorf

ACTING Chairman, Operating Committee
Defense Minerals Exploration
Administration

APPROVED:

R. W. Nedges
Member, Bureau of Mines

T. P. Thayer
Member, Geological Survey

Defense Minerals Administration

Review of Application for Exploration Assistance

Docket No. DMEA 2310

Commodity Tungsten

Total Amount $7,355.20

Govt. Participation 75%

1. Name and Address of Applicant H. J. Kandel, Tungsten Prospecting Associates
2409 E. 19th Street, Long Beach 6, California

2. Location of Property T.P.A. No. 1 Claim - Section 13; T2N; R2E
San Bernardino County, California
(Round Valley Mining District - Rose Mt. Road - 3.5 miles east of Baldwin Lake)

3. Mineral or metal Tungsten Is it listed in Section 9 of MO-5?

If not, application will be rejected.

4. Geologic probability of discovery--based on data in application (question #16, 17, 18, 20 and 22)*

Mines or Survey reports, etc., do you rate chances:

a) Good _____

b) Poor _____

c) None _____

d) Don't know--needs field examination Needs field examination

e) Is there an alternative and favorable project? Suggest surface trenching and sampling first.
(If so, attach an explanation)

5. Is the applicant's right to the property clearly stated? Yes
(question 5, 6, 7)*

6. If applicant is a lessee, is a copy of the lease attached? Owner

Does the lease have sufficient time to run to cover a future

productive period? Owner - Sufficient time.

*question numbers are those of MF-103

7. Are subordination agreements necessary? No

a) MF-201? _____

b) MF-202? _____

8. From the data presented, does the proposed project appear feasible from the point of view of:

a) Available manpower Unknown

b) Equipment and supplies Unknown
(question 14 plus general knowledge of availability)*

c) Accessibility (question 12)* Unknown

d) Water (question 13)* Unknown

e) Power (question 13)* Unknown

Is a field check needed on any of these points? Yes

9. Does the experience of the applicant appear to be adequate to assure that he can properly conduct the proposed project? (question 4)* No

_____

Is a field check needed on this point? Yes, in detail

10. Exhibit A. (question 21 and 22)*

a) Is the project adequately described? No

If not, are there sufficient data given so that you can describe the project? No If so, attach a draft.

b) Is there an adequate map or sketch of the proposed work? No

_____

c) Is the proposed work "exploration" under the definition of Section 8, MO-5? Yes

If not, what part of it is? _____

_____

_____

_____

Is this part a worthwhile exploration project? Unknown

d) Are the cost estimates detailed? Insufficient cost data

Can they be summarized, as on page 2 of Procedural Instruction 5-A, from the available data? No If so, attach a draft.

e) Are the cost estimates reasonable? Insufficient data

f) Should more information be requested from applicant? Yes

g) Is a field examination necessary to complete Exhibit A? Yes

11. Exhibit B (question 23-d)*

a) Is it applicable? Yes

b) If so, are sufficient data furnished? No If so, attach a draft.

c) Is a field check needed? Yes

12. Exhibit C (question 23-e, f and g)*

a) Is it applicable? Yes

b) Sufficient data? No If so, attach a draft.

c) Are rents and charges reasonable? Unknown

d) Is a field check needed? Yes

13. Exhibit D (question 23-a, b)*

a) Are there sufficient data? No

b) Is the schedule adequate for the work proposed? Unknown

c) Is the schedule excessive for the work proposed? Unknown

d) Are the proposed wages and salaries reasonable? Unknown

e) Is a field check needed? Yes

14. Exhibit E (question 23-c)*

a) Is it applicable? Yes

b) Sufficient data? No

c) Reasonable? Unknown

d) Field check needed? Yes

15. In your judgment, can the proposed work be done in the proposed time? Yes

(All exploration must be completed within two years)

16. If field examination is not needed, attach your recommendation.

17. If field examination is needed, do you have any special instructions for the field team not indicated by your answers to the foregoing question? It is suggested that an adequate geological map be prepared and sufficient sampling be done to establish the quality of the ore exposures. Underground development should not be considered until after results of surface trenching are available. Applicants have apparently had no experience in mining tungsten ores. A breakdown of costs is also desired. Would a few diamond drill holes be adequate to secure underground information on the ore, prior to consideration of driving the proposed 200 ft. tunnel. Recommend and detail a feasible program.

Reviewed by: Glenn G. Gentry

Date 2/4/52

DEPARTMENT OF INTERIOR
BUREAU OF MINES
REGION III
RECEIVED

1975 FEB 13 AM 11:12

SAN FRANCISCO, CALIFORNIA

FILE COPY
SURNAME:

UNITED STATES
DEPARTMENT OF THE INTERIOR
DEFENSE MINERALS ADMINISTRATION
WASHINGTON 25, D. C.

FEB 12 1952

Selfridge
Gethers
Thayer
Hedges

Mr. H. J. Kandel
Tungsten Prospecting Associates
2409 E. 19th Street
Long Beach 6, California

Re: Docket No. DMEA 2310X - Tungsten
T.P.A. Claim No. 1
Section 13; T.2 N; R.2 E
San Bernardino County, California

Dear Mr. Kandel:

Your application for assistance in exploring the T.P.A. Claim No. 1 in San Bernardino County, California, Docket No. DMEA 2310X, has been referred to Mr. H. C. Miller, Executive Officer, DMEA Field Team, Region III, 1012 Flood Building, 870 Market Street, San Francisco 2, California, for a field examination.

The Regional Office will contact you at an early date in regard to your project. Any assistance that you can offer the field team during the examination will be appreciated.

Sincerely yours,

C. O. Mittendorf (for) J.W. 2-12-52

Acting Administrator
Defense Minerals Exploration
Administration

GGGentry'lm
2/5/52

cc: Admn. Reading File
Docket
R. W. Geehan, USBM
D. M. Lemmon, USGS
Field Team Reg. III
G. C. Selfridge
G. G. Gentry

STANDARD FORM NO. 64

Office Memorandum • UNITED STATES GOVERNMENT

TO : George Selfridge, DMEA DATE: January 7, 1952

FROM : D. M. Lemmon, USGS

SUBJECT: Exploration application $7,355.20 DMEA 2310 - Tungsten
Tungsten Prospecting Associates
H. J. Kandel
2409 E. 19th Street
Long Beach 6, California

Property: TPA No. 1 claim
Sec. 13, T. 2 N., R. 2 E.
Rose Mountain Road
3.5 miles E. of Baldwin Lake
San Bernardino County, California

Proposal: (1) to drive a cross-cut tunnel 200 feet long to intersect the mineralized beds 100 feet beneath the outcrop. Work to be contracted at $27 per foot.
(2) To dig 10 surface trenches 4 feet wide, 5 feet deep, and 12 feet long at about 100-foot intervals.

Geology: The applicant's description suggests that coarse bunches of scheelite are present in 3 bands of calcareous hornfels 6 inches, 12 inches, and 36 inches wide in a zone 13.5 feet wide. The content of WO_3 is unknown, but is estimated at 2.76 percent on the basis of a single selected sample. The extent of mineralization along the strike is unknown.

This prospect appears to be a newly-discovered occurrence, and has not been examined by the Geological Survey. The occurrence of scheelite in the Morongo district to the southeast (T. 2 N., R. 3 E.) has long been known, but no commercial deposits have been found.

Recommendation: It is suggested that the docket be referred to the Field Team, Region III, San Francisco for field appraisal.

The information presented by the applicant suggests that approval of underground exploration should be contingent upon prior completion of surface trenching and sampling. Sufficient surface work has not yet been done to justify underground exploration.

Don Lemmon

Subject: DMEA-2310
Re: Exploration Loan

Mr. H. J. Kandel
Tungsten Prospecting Associates
2409 E. 19th Street,
Long Beach 6, California

This will acknowledge receipt of your application dated December 24, 1951 for a loan under the Defense Production Act of 1950.

Your application was assigned Docket Number DMEA-2310 and referred to the Iron & Ferro-Alloy Division.

Kindly refer to DMEA-2310 in any future correspondence relating to your application.

Sincerely yours,

Robert E. Adams,
Acting Administrative Officer

7862

DEPARTMENT OF THE INTERIOR
Defense Minerals Administration
RECEIVED
JAN 2 - 1952

2409 East 19th Street
Long Beach 6, California

December 24, 1951

Defense Minerals Administration
Department of Interior
Washington 25, D.C.

Dear Sirs:

Transmitted herewith are 4 copies of Application for Aid for an Exploration Project, MF-103, and 4 copies of General Technical Data, form MF-100.

We will appreciate your consideration of this application.

Herbert J. Kandel
Herbert J. Kandel
Secretary for the
Tungsten Prospecting Associates

Encls.
HJK:lln

UNITED STATES DEPARTMENT OF THE INTERIOR
GEOLOGICAL SURVEY

DMEA 2310
(TUNGSTEN)

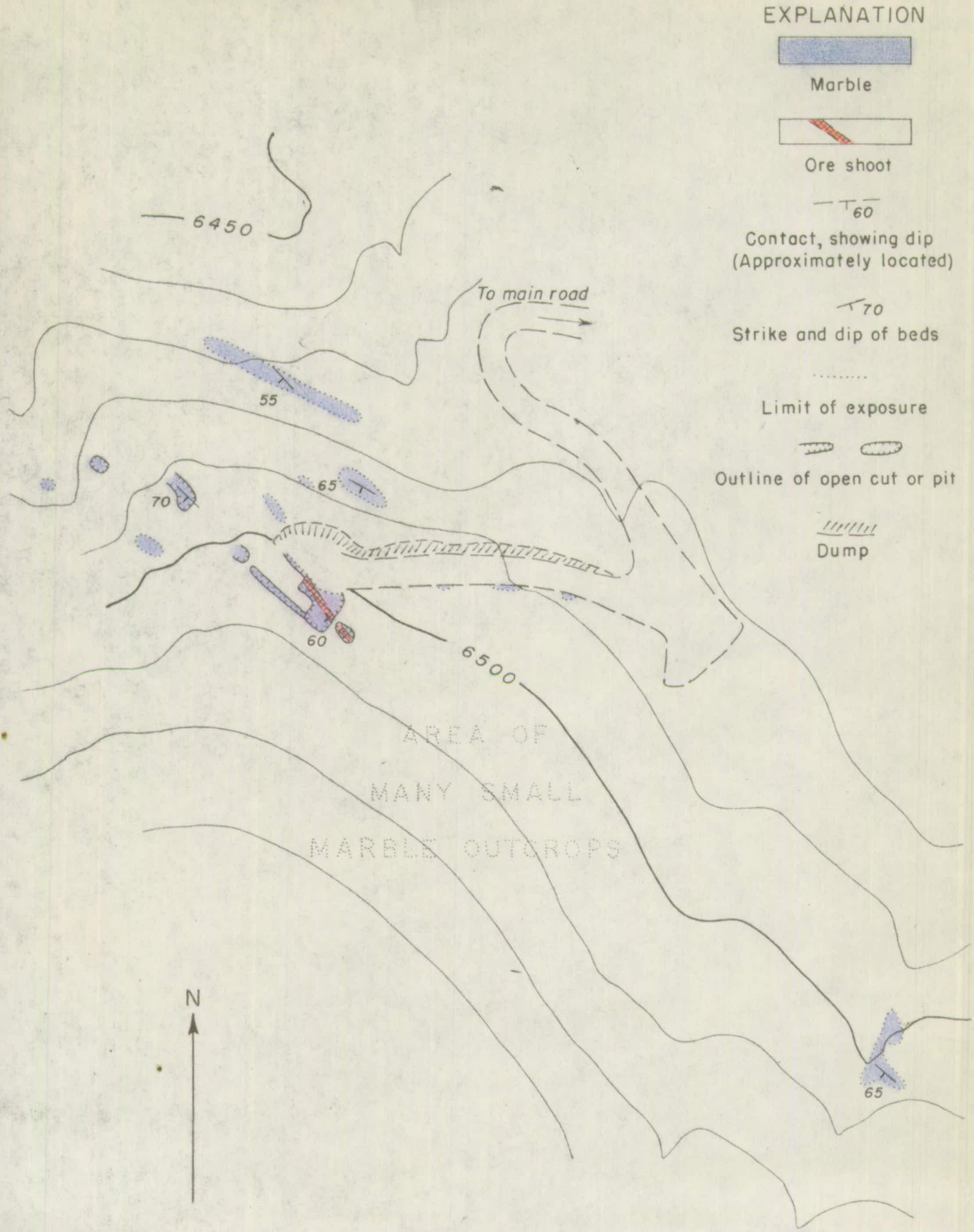

PLATE NO. 1

Mapped by W. P. Irwin and L.D. Clark
February 28, 1952

Tungsten Prospecting Associates Claim No. 1, San Bernardino County, California

0 50 100 150 Feet

Contour interval 10 feet

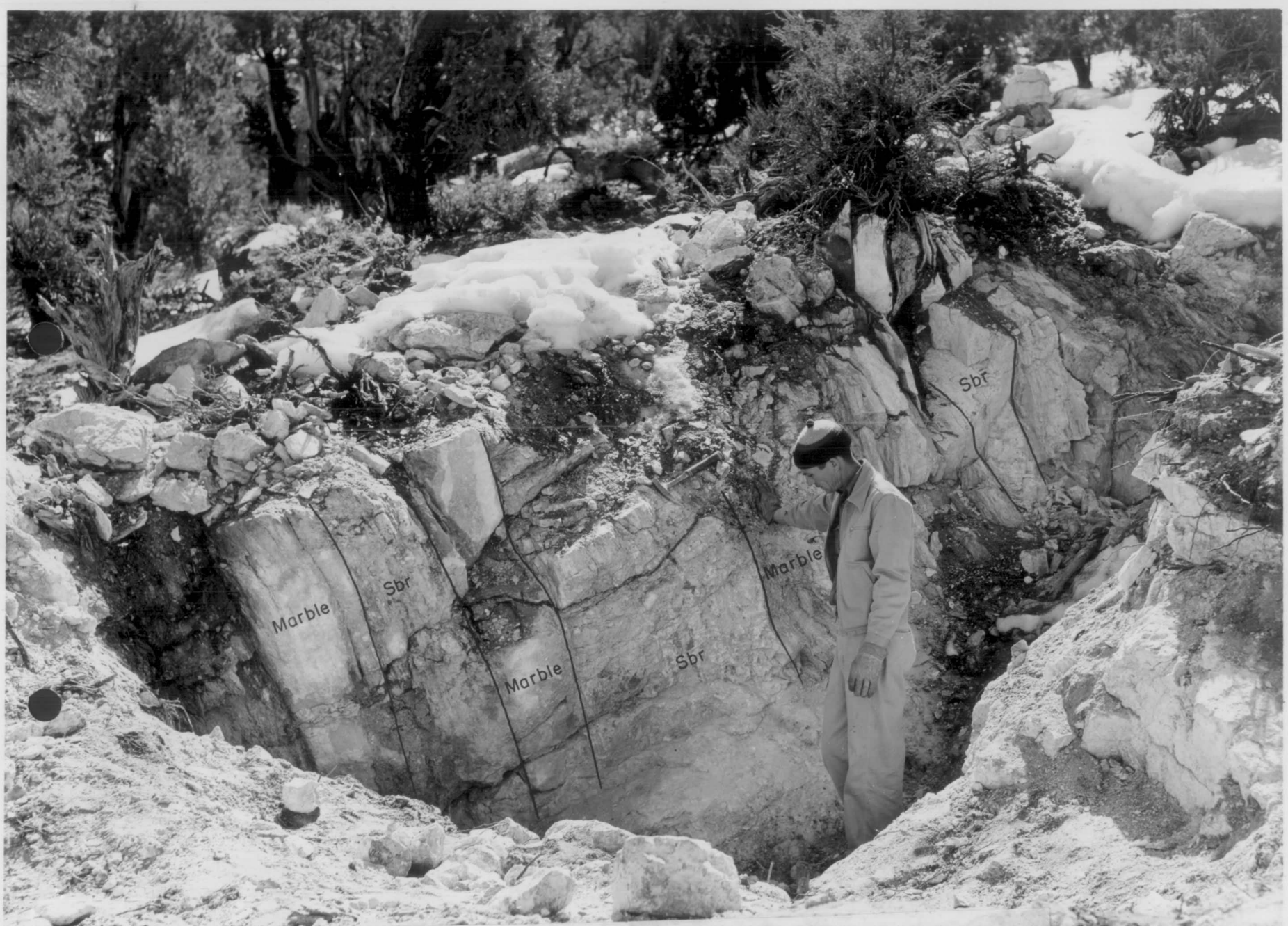

Plate 2. View of main open cut, looking south. Mr. Deeter in cut. Note the three parallel bodies of scheelite-bearing rock (Sbr) in marble. Scheelite is visible in the center body as irregular, dark gray masses.