April 24, 1951

Memorandum

To: Landon S. Strubel, Executive Secretary, Defense Minerals Administration

From: DMA Field Team, Region IV

Subject: DMA Docket 364, Comstock Extension Mining Company

We are attaching the original and two copies of the report on the Comstock Extension Mining Company, Gila County, Arizona, DMA Docket 364.

The Team concurs with the recommendations of the field men.

CONFIDENTIAL

F. H. Allsman, Alternate

A. H. Koschmann

Attachments
One copy by air mail
Two copies by regular mail

Copies to:
DMA files
Koschmann
Allsman
Chas. Anderson
W. R. Storms

COMSTOCK EXTENSION MINING CO.
GILA COUNTY, ARIZONA

DEFENSE MINERALS ADMINISTRATION REPORT
DMA DOCKET NO. 364

APPROVED:

P. T. Allsman, Alternate

A. H. Koschmann

A. H. Koschmann

United States Department of the Interior
Defense Minerals Administration
James Boyd, Administrator

UNITED STATES
DEPARTMENT OF THE INTERIOR
BUREAU OF MINES

224 NEW CUSTOMHOUSE
DENVER 2, COLORADO

Mining Division
Region IV

April 24, 1951

Memorandum

To: DMA Field Team, Region IV

From: Chief, Mining Division

Subject: DMA Docket 364, Comstock Extension Mining Company, Gila County, Arizona

It is noted that the writers recommend denial of the loan application but indicate that if the operator is willing and able financially a matching loan contract be entered into to conduct addition exploration with a view to delineating the ore discovered in drilling.

I concur with these recommendations.

P. T. Allsman

Attachments

UNITED STATES
DEPARTMENT OF THE INTERIOR
GEOLOGICAL SURVEY
200 New Customhouse
Denver 2, Colo.

April 24, 1951

Memorandum

To : Field Team, Region IV

From : A. H. Koschmann

Subject: DMA Docket #364 - Comstock Extension Mining Company, Glendale, Arizona

I herewith transmit the geologic report (original and 11 copies) by N. P. Peterson, covering the Comstock Extension Mining project, Glendale, Arizona.

A. H. Koschmann

A. H. Koschmann
Supervising Geologist
Colorado-Wyoming

Attachment

UNITED STATES
DEPARTMENT OF THE INTERIOR
GEOLOGICAL SURVEY
P.O. Box 4126, University Station
Tucson, Arizona

Air Mail

April 18, 1951
Registered Mail
Return Receipt Requested

Memorandum

To: Mr. A. H. Koschmann

From: Mr. C. A. Anderson

Subject: DMA Docket #364, Comstock Extension Mining Company, Glendale, Arizona

Enclosed are original and 11 copies of the geological report by Nels P. Peterson on the above property. These copies are to be attached to the report by G. R. Rubly of the Bureau of Mines which is being edited and typed in Denver. The maps to accompany the report are being forwarded to P. T. Allsman by the Bureau of Mines.

This report has my approval.

Please return an assembled copy to us and one to W. R. Storms.

Charles A. Anderson

Charles A. Anderson
District Supervisor
Arizona-New Mexico

Enclosures 12

UNITED STATES
DEPARTMENT OF THE INTERIOR
BUREAU OF MINES

Arizona-New Mexico Branch
[redacted]
Box 4097
UNIVERSITY STATION

MINING DIVISION
REGION IV

Mining Division
Date Rec'd.
APR 1 1951
BUREAU OF MINES
Denver, Colorado

TUCSON, ARIZONA

April 18, 1951

AIR MAIL

MEMORANDUM

To : Paul T. Allsman, Denver, Colorado

From : L. A. Stewart for W. R. Storms, Tucson, Arizona

Subject : Rough draft of report on Comstock Extension Mining Co., Gila County, Ariz., DMA Docket 364.

According to telegram received this morning, we are sending to you the rough draft ofthe above report. I have had the original rough draft retyped and we are holding the original draft as a safety precaution. The author had made numerous pencil corrections and Rex had already edited about half the report. The enclosed draft incorporates both sets of corrections and gives you clean sheets to edit. I have proofread this merely to be sure it is a true copy.

We are today mailing you the complete set of maps for this report.

LAS

Lincoln A. Stewart for
Walter R. Storms

CC DMA 364
DF

SUMMARY, CONCLUSIONS, AND RECOMMENDATIONS

By Grant R. Rubly[1] and Nels P. Petersen[2]

The Comstock Extension Mining Co. made application for an exploitation and development loan to the Defense Minerals Administration in the amount of $682,000. This application, DMA Docket 364, was reviewed by the Lead-Zinc Branch of the Defense Minerals Administration and referred to the Field Team, Region IV, U. S. Bureau of Mines, for investigation. The field investigation was conducted on April 3, 1951.

The property of the applicant is about 2½ miles north of Globe, Arizona. The principal mineral deposit is the Irene vein which occurs along a zone of mineralized fault breccia 5 to 30 feet wide that crops out for a distance of 4,200 feet on the south side of Irene Gulch. It strikes N. 50° - 80° E. and dips from 75° N. to vertical. Diabase forms the hanging wall of the vein fault, and quartzites of the late pre-Cambrian Apache group form the footwall to a depth of 350 feet below the outcrop. Below the base of the quartzites both walls of the vein fault are of diabase to a depth of at least 1,300 feet.

The primary ore minerals are chiefly sphalerite and galena. They have been almost completely oxidized and most of the zinc has been leached out to a depth of 900 feet. The oxidized vein matter contains hemimorphite, willemite, cerrusite, and a little galena but is not of ore grade.

Ten diamond drill holes intersected the vein fault at depths ranging from 450 to 1,200 feet. They show that the mineralization is discontinuous and erratic.

At depth, in the sulfide zone penetrated by diamond drill holes, a light colored sphalerite occurs in quartz stringers. The lead minerals seem to be

---

1/ Mining engineer, Arizona-New Mexico Branch, Mining Div., Region IV, Bureau of Mines.

2/ Geologist, U. S. Geological Survey, Globe, Arizona

absent. Mineralization of vein material from the old Doughboy shaft appears as chalcopyrite, pyrite, and sphalerite. The extent of this mineralization is not known.

There are no reserves of measured or indicated ore. Only one of the ten holes that explore the vein intersected sulfide mineralization of ore grade. On the basis of this one intersection, a block of sulfide ore containing about 19 percent zinc, less than 0.5 percent lead, and about 2.5 ounces of silver per ton might be inferred.

Any reserves contiguous to the Doughboy shaft are based entirely on rumor. There is no geologic evidence of their presence.

As no sulfide ore has been blocked out and the oxidized ore, indicated and inferred, is small in tonnage and low in grade, any loan for exploitation or development is not justified. It is, therefore, recommended that the application for a loan be denied.

Comstock Extension Mining Company
Cleondale, Arizona

By N. J. Peterson [1]

Geology

[1] Geologist, U. S. Geological Survey, Globe, Arizona

Geology

COMSTOCK EXTENSION MINING COMPANY

GLENDALE, ARIZONA

CONTENTS

	PAGE
General Geology	1
Character of the Vein	5
Exploratory Drilling	7
Drill Hole 4	7
Drill Hole 3	8
Drill Hole 5	8
Drill Hole 1	8
Drill Holes 1 and 2	8
Drill Hole 6	9
Drill Hole 7	9
Drill Hole A	9
Ore Reserves	9
Development from the Doughboy Shaft	9
Conclusions	10

GENERAL GEOLOGY

The sedimentary and volcanic rocks that crop out in the vicinity of the Comstock Extension Mining Co. property are shown in the following stratigraphic column:

Tertiary and Quaternary	Gila conglomerate
	<u>Unconformity</u>
Tertiary (?)	Dacite flow
	<u>Unconformity</u>
Mississippian	Escabrosa limestone
Devonian	Martin limestone
	<u>Erosional Disconformity</u>
Cambrian	Troy quartzite
	<u>Erosional Disconformity</u>
	Dripping Spring quartzite 400 ft.
Late pre-Cambrian	Barnes conglomerate 15 ft.
Apache Group	Pioneer formation 270 ft.
	Seanlan conglomerate 5 ft.

Early pre-Cambrian Pinal schist

The deposition of the late pre-Cambrian and Paleozoic formations was interrupted by two periods of erosion, but no appreciable discordance in the attitude of the strata can be recognized. Extensive faulting occurred after deposition of the Paleozoic limestones; and during the late Cretaceous or early Tertiary orogeny, great volumes of diabase magma were intruded into the sedimentary formations. The diabase forced its way along the faults forming dikes and between the strata as thick sills. The greatest volumes of magma were intruded into the formations of the late pre-Cambrian Apache group and Cambrian Troy quartzite.

A geologic map of the area that includes the property of the Comstock Extension Mining Co. is shown in figure 8. Only the diabase and rocks of the Apache group are important in connection with the mineral deposits. The Pioneer formation and the Dripping Spring quartzite of the Apache group are composed of fine-grained arkosic quartzite.

The Irene vein, which is the only important mineral deposit on the property, occurs along a zone of fault breccia that crops out for 4,200 feet on the south side of Irene Gulch (fig. 8). In some places, particularly over the main ore shoot, the cemented breccia has nearly vertical walls and protrudes as much as 25 feet above the surface of the hillside. The strike of the vein fault ranges from N. 50° E. at its east end to N. 80° E. at its west end and is roughly parallel to the gulch. The dip, as determined from underground development, ranges from vertical to 75° N.

Dripping Spring quartzite forms the outcrop on the south side of the fault except in one small gulch cutting across the vein where the underlying Barnes conglomerate and Pioneer formation are exposed. Farther south the Dripping Spring quartzite is overlain by small remnants of Troy quartzite, Martin limestone, and a few caps of Escabrosa limestone on the highest points. Diabase crops out along the north side of the fault except for a short distance at the west end where the hanging wall is arkosic quartzite of the Pioneer formation. Undoubtedly this diabase was intruded along an old fault. Renewed movement on the fault after intrusion of the diabase produced the breccia zone along the diabase-quartzite contact which later became the channel of mineralizing solutions. There was also slight displacement along the fault after mineralization took place. Exploration by diamond drilling shows that the diabase forming the north wall of the fault continues to a depth of more than 1300 below the outcrop of the vein.

South of the vein fault, diabase was intruded as a sill at or near the base of the Pioneer formation, as shown in figure 10. Above the winze in No. 1 adit, the top of the Pioneer formation on the south, or footwall side of the vein, is approximately 110 feet above the adit level. Pioneer formation is exposed in the footwall of the vein by a crosscut 150 feet below the adit level. The contact of the Pioneer with the underlying diabase sill is not exposed in the mine workings, but if a thickness of 270 feet is assumed for the Pioneer, the maximum depth of the contact below the adit level would be about 190 feet. Below the bottom of the Pioneer, both walls of the vein fault

are diabase. The thickness of the diabase sill under the Pioneer is not known, but exploratory drilling shows that it is at least 600 feet. In this area the Seanlan conglomerate and Pioneer formation probably were deposited on Pinal schist, hence the diabase sill will be underlain by schist.

At the west end of the vein outcrop, Pioneer formation forms the north wall for about 900 feet along the strike indicating that the north wall has been displaced upward with respect to the footwall. The sedimentary formations along the rest of the hanging wall were elevated so much higher that they have been completely removed by erosion. The amount of displacement that occurred after the diabase intrusion was probably relatively small.

About 1,000 feet eastward from No. 1 adit, the vein passes into diabase and cannot be traced for more than a few tens of feet beyond the end of the quartzite; however, the vein here is weakly mineralized and the exposures poor. About 1,000 feet farther eastward and approximately on the projected strike of the Irene vein, a fault, which may be the continuation of the Irene vein fault, crops out and can be followed northeastward for a distance of about 1 mile. This fault is weakly mineralized throughout its extent; the minerals along the eastern portion of the fault are mainly quartz, calcite, and manganese oxides.

At the west end, the Irene vein is cut off by a cross fault which drops a block of Martin and Escabrosa limestone into contact with the Pioneer formation and Dripping Spring quartzite that form the walls of the vein. Abundant manganese oxides occur in the bottom bed of the Escabrosa limestone in this block.

CHARACTER OF THE VEIN

The Irene vein occupies a zone of fault breccia ranging from 5 to 30 feet wide. The breccia consists of angular fragments of quartzite and diabase. Greenish, stony quartz fills interstices of the breccia and largely replaces the diabase fragments and gouge. Small cavities lined with drusy quartz are common throughout the vein.

Although small amounts of metallic minerals occur in most parts of the vein breccia, only one shoot is known in which the minerals are sufficiently concentrated to constitute ore. This shoot is developed by the workings reached through No. 1 adit. As seen in these workings, the vein is bounded by thin seams of gouge that form well-defined, regular walls. In many places gouge-filled fractures, generally parallel to the walls, occur within the vein.

The ore is largely oxidized to the depth reached by the mine workings, but small remnants of galena are present in many places. The oxidized vein matter is a soft, porous mass consisting largely of quartz, chlorite, quartzite fragments, and altered and partly replaced diabase. Limonite and powdery masses of manganese oxides are also abundant constituents. Glistening flakes of specularite are generally present and in some places comprise 10 to 20 percent of the vein matter.

The principal ore minerals are cerussite, hemimorphite, willemite, and probably a little smithsonite. Crystals and crusts of hemimorphite and willemite are widely disseminated throughout the vein. Cerussite is less widely distributed and generally occurs as small rounded masses which commonly surround small remnants of galena. A little vanadinite and descloizite are present in a few places near the margins of the vein. Stains of copper carbonates are rarely seen.

The ore minerals probably are almost completely oxidized down to the permanent water level, the elevation of which is not known. The water level is not likely to be much higher than the level of Final Creek southwest of the deposit; that is, approximately 300 feet below the 420-foot level of the mine. In drill hole #5 the zinc minerals were partly oxidized 550 feet below the 420-foot level (fig. 11).

The unoxidized primary ore is known only from a diamond-drill core recovered from hole #3 which cut the ore shoot about 800 feet below the adit level. Examination of an incomplete split of the core shows that the ore shoot at this depth is largely quartz and light-colored sphalerite accompanied by small masses of specularite and more or less unreplaced diabase. No galena was recognized in the samples studied, but a composite of the vein intersection in drill hole #3 showed 0.2 percent lead.

Sampling by the Comstock Extension Mining Co. indicates that the oxidized vein matter in the ore shoot between the 420-foot level and the surface averages 3.5 percent lead, 7.5 percent zinc, and about 2.5 ounces of silver per ton. The lead content of the primary ore was undoubtedly somewhat lower because of the decrease in specific gravity of the vein matter as a result of oxidation and leaching. The sphalerite has been completely destroyed. Part of the zinc was reprecipitated as hemimorphite and willemite, but a large part of it undoubtedly was carried away in solution. The zinc content of the primary ore shoot was probably between 15 and 25 percent. It is very likely that there has been some enrichment of silver in the oxidized zone.

Adit No. 2 intersected the vein fault about 400 feet from the face of the east drift in adit No. 1. From the point of intersection a

drift follows the fault zone along the diabase-quartzite contact for 250 feet northeastward. The fault breccia exposed in this drift is altered but is not as completely replaced and cemented by quartz as that exposed in the workings from adit No. 1. The metallization is weak and discontinuous, and no commercial ore was found. The northeast end of the drift continues a short distance beyond the end of the quartzite block that forms the footwall along the upper part of the vein to the southwest. The outcrop of the vein fault cannot be recognized where it continues through diabase beyond the end of quartzite in the footwall. About 150 feet northeast of the end of the drift, drill hole B intersected 1t feet of vein matter 400 feet below the level of the drift which averaged 5 percent zinc, 0.3 percent lead, and less than 1 ounce per ton in silver.

Southeast of the mine workings from adit No. 1, the outcrop of the vein fault becomes less prominent. The breccia zone is narrower, and in some places the vein fault shows as a single gouge-filled fracture along the diabase-quartzite contact. It has been explored by a few shallow pits sunk at intervals along the outcrop.

EXPLORATORY DRILLING

Drill Hole 4. Drill hole 4 (fig. 9 and 11), 250 feet southwest of the winze in adit No. 1, cut several thin quartz stringers containing a little sphalerite. It intersected a breccia zone about 10 feet wide 930 feet below the adit level. This breccia zone, which apparently was not appreciably mineralized, is approximately at the position of the projected vein fault.

Drill Hole 3. Drill hole 3 intersected the vein 800 feet below adit No. 1 (fig. 9 and 11). The intersection indicates a vein 12 feet wide that averaged 19.7 percent zinc. Later the hole was re-entered and deflected 100 feet from the vein. The core representing 15 feet of hole is reported by Anton Trojanovitch of Comstock Extension Mining Co. to have averaged 16.7 percent zinc. An incomplete split of the core shows that the vein is largely quartz and light-colored sphalerite accompanied by small masses of specularite and more or less unreplaced diabase. This intersection represents a vein width of 11½ feet.

Drill Hole 5. Drill hole 5 cut the vein 250 feet northeast of the intersection in hole 3 and at approximately the same elevation. The length of the intersection indicates a vein thickness of 12 feet which averaged 7.14 percent zinc, of which 2.66 percent - that is, about 37 percent of the total zinc- was in the form of oxidized minerals.

Drill Hole D. Drill hole D is between hole 3 and hole 5 (fig. 9). It intersected the projected plane of the vein about 100 feet northeast of the vein intersection in hole 3 and at about 300 feet lower elevation, 1090 feet below the adit level (fig. 11). At this point the core showed massive, relatively fresh diabase; but at 90 to 130 feet higher elevations the hole passed through a strong fault zone which, over a width of 10 feet on the hanging wall side, averaged 0.57 percent zinc. Some uncertainty exists as to whether this hole actually cut the vein or was stopped short of it.

Drill Holes 1 and 2. Drill holes 1 and 2 intersected the main ore shoot at 300 and 550 feet respectively below the adit level. In both holes the vein was completely oxidized, and the zinc was largely leached out. The intersection in hole 2 indicated a vein width of about 3½ feet

which included a 10-foot horse of poorly mineralized diabase.

Drill Hole 6. Hole 6 cut a very strong fault zone that is about 200 feet south of the projected plane of the vein. The log shows no other break that can be identified as the vein. The hole was drilled with a plug bit for 700 feet to a point at which it is approximately at the projected footwall of the vein. The vein may have been so weak or unmineralized at the intersection that it escaped notice.

Drill Hole 7. This hole should have intersected the vein fault 275 feet northeast of the intersection in hole 5 and about 100 feet higher elevation. Near the intersection with the projected vein, the hole cut a breccia zone 2 feet wide and a number of quartz veinlets, ½ to 2 inches wide, that contained a little sphalerite. The remainder of the hole was in hard unaltered diabase.

Drill Hole A. No reliable information available.

ORE RESERVES

The only mineralization of ore grade, which is that cut by drill hole 3, is clearly the downward extension of the shoot developed by adit No. 1. This intersection is probably near the lower limit of oxidation which is undoubtedly highly undulating. On the basis of this intersection a block containing about 15,000 tons of sulfide ore averaging 19 percent zinc might be inferred. Any substantial extensions of this ore are likely to be found only at greater depths, that is, more than 400 feet below the deepest level of the mine.

DEVELOPMENT FROM THE DOUGHBOY SHAFT

The dump of the Doughboy shaft includes a little mineralized rock containing pyrite and sulfides of copper and zinc. According

to rumor, a 1200-foot crosscut, driven southeastward on the 800-foot level of the shaft, cut a large ore body from which this mineralized rock was mined 45 years ago.

Several narrow, weakly mineralized fractures crop out in the vicinity of the shaft. They strike northeastward and dip from 50° SE to vertical. Two exploratory holes have been drilled to crosscut these fractures at depths ranging from 300 to 500 feet below the outcrops. The mineralization in the fractures cut by the drill holes is comparable with that seen in the outcrops. There is no surface indication of a large ore body in the vicinity of the Doughboy shaft. However, it is entirely possible that a small shoot of more intensive mineralization may occur along one of these minor fractures.

CONCLUSIONS

It is characteristic of the vein-type mineral deposits in the Globe area that the largest and richest ore bodies formed where one or both walls of the vein fault are of Paleozoic limestone. The next most favorable condition for ore deposition was where Troy quartzite or quartzite formations of the Apache group formed one or both walls of the vein fault. The shaly beds in the upper half of the Dripping Spring quartzite were especially favorable. Where both walls are of diabase, the veins are generally narrower and more discontinuous. Good ore bodies may be formed in places where the diabase has been brecciated, but commonly the faults in diabase are so tight and choked by gouge that they are but weakly mineralized, if at all.

In the vicinity of main ore shoot in the Irene vein, diabase forms both walls of the vein fault from the base of the Pioneer formation

somewhere between the 300-foot and 420-foot level down to the top of Pinal schist, an interval of at least 900 feet and perhaps more. None of the veins in the Globe area have been productive where they extended downward into the Pinal schist.

All the drill holes explore the Irene vein below the base of the Pioneer formation where both walls are of diabase. They indicate that the mineralization is discontinuous and erratic. Whatever mineralization is present above the base of the Pioneer formation is almost certain to be too highly oxidized and leached to constitute commercial ore.

COMSTOCK EXTENSION MINING CO.
GILA COUNTY, ARIZ.

By Grant R. Rubly 1/

Engineering
Report

Engineering

1/ Mining engineer, Bureau of Mines

COMSTOCK EXTENSION MINING CO.
GILA COUNTY, ARIZONA
BMR DOCKET 364

CONTENTS

Page

Engineering report:

Introduction 1
Acknowledgments..... 2
Location, topography, and physical features..... 2
History and production..... 2
Ownership and extent..... 3
Description of deposits..... 4
Ore reserves..... 6
Present status..... 7
Project requirements..... 9
Conclusions..... 9
Recommendations..... 11

ILLUSTRATIONS

Figure

1 Location map
2 Claim map
3 Adit level - 150-foot level
4 225-foot level
5 298-foot level
6 420-foot level
7 Section on plane of Irene vein
8 Geologic map
9 Plan of No. 1 and No. 2 adit
10 Section through winze
11 Composite of drill holes sections

INTRODUCTION

The Comstock Extension Mining Co., through its president, Ted Robb, made application to the Defense Minerals Administration for an exploitation and development loan in the amount of $682,000. This application was reviewed by the Lead-Zinc Branch of the Defense Minerals Administration and referred to the Field Team, Region IV, U. S. Bureau of Mines, for appropriate action.

As the amount of financial assistance requested was somewhat out of proportion to the known reserves of the mine and the past production records, a thorough field investigation was requested. This field investigation was to determine the geologic environment of the ore bodies, the possible need for further exploration before developing these ore bodies, and the best mining methods to be employed if the reserve estimates were substantiated.

The field investigation was conducted on April 3, 1951

ACKNOWLEDGMENT

Acknowledgments are hereby made to Anton Trojanovich for the assistance and information given while at the property, and to Nels P. Peterson, Geologist, U. S. Geological Survey, who has made a very thorough and detailed study of the entire area, as well as the Irene vein.

LOCATION, TOPOGRAPHY, AND PHYSICAL FEATURES

The Comstock Extension Mining Co. is on the south side of Irene Gulch about 2½ miles due north of Globe Arizona. The property includes nine patented and seventeen unpatented lode mining claims in Secs. 11, 12, 13, and 14, T. 1 N., R. 15 E., Gila and Salt River Base and Meridian. It is reached by traveling 2.3 miles northwesterly from the courthouse in Globe on U. S. Highway 60 and 70, turning right on a dirt road to Pinal Creek, crossing Southern Pacific tracks about 1 mile from highway and proceeding up Irene Wash a distance of 1.7 miles. Its location with reference to Globe is shown on figure 1.

The No. 1 adit is at an altitude of about 3,900 feet. The topograph of the area is rolling to steep. The ground cover consists of typical desert foothill vegetation of grasses, cacti, mesquite, and cat-claw.

HISTORY AND PRODUCTION

The Irene vein was opened in the 1880's and shipments of ore mined from about the adit level were made. These shipments amounted to 29 cars of ore, averaging 13.7 ounces silver, 15.83 percent lead, and 11.79 percent zinc, having a total value of $15,000. This ore was shipped to Consolidated Kansas City Smelting Co. at El Paso, Texas.

In 1947 one carload of ore was shipped to International Smelter at Miami, and three carloads to American Smelting and Refining Co. at El Paso. No smelter settlement sheets were available to the Government examiners, but it is understood that the loss, exclusive of mining costs, amounted to between $40 and $50

for the total shipments.

Some ore was mined from the 225-foot level and placed in the surface ore bin. It is reported that this ore was too low-grade to ship and subsequently was sorted to about two tons of material, the rest having been used to build road.

The old Doughboy shaft was sunk in 1901 by the Arizona-Colorado Copper Belt and Gold Mining and Milling Co. The shaft was sunk to a depth of 963 feet and levels made at 200 feet, 500 feet, and 800 feet. These levels cut various fault and vein zones containing some mineralization. Ore from the 800-foot level from a 15-foot vein carrying from 2.36 percent to 7.4 percent copper was carefully sorted and shipped to the Old Dominion Smelter at Globe. The zinc content was too high for the ore to be handled. The operations at the old Doughboy ceased in 1913.

Diamond drilling campaigns for the purpose of locating and evaluating the Irene Vein have been carried out by several companies at various periods of time. J. L. McIver drilled three holes with Reconstruction Finance Corporation funds (Docket NM 5289) in the spring of 1943. In the fall of the same year the American Zinc, Lead and Smelting Co. drilled a number of holes. The following year the American Smelting and Refining Co. drilled several holes around the Irene and new Doughboy workings. The Comstock Extension Mining Co. deflected the hole designated McIver D. D. hole 3 and cut the Irene vein at depth. The location and relationship of these various holes are shown on figures 2, 9, and 11.

OWNERSHIP AND EXTENT

The present Comstock Extension Mining Co. which owns this property, is a stock company. As of the date of the examination the officers were as follows:

The president, Ted Webb, Box 509, Phoenix, Arizona; vice-president, Joe Quhitte, Miami, Arizona; secretary and treasurer, William W. Wunsh; superintendent, Anton Trajcevich.

Nine patented and seventeen unpatented lode mining claims in secs. 11, 12, 13 and 14, T. 1 N., R. 15, E., Gila and Salt River Base and Meridian, constitute the holdings of this company.

DESCRIPTION OF DEPOSITS

The Irene vein occurs along a zone of mineralized fault breccia that crops out for a distance of 4,200 feet on the south side of Irene Gulch. In some places the cemented breccia has nearly vertical walls and protrudes as much as 25 feet above the surface of the hillside. The strike of the fault ranges from N. 50° E. at its east end to N. 80° E. at its west end and roughly parallels the gulch. The dip ranges from vertical to 75° N.

Dripping Spring quartzite forms the outcrop on the south side of the fault except in one small gulch cutting across the vein where underlying Barnes conglomerate and Pioneer quartzite are exposed. Diabase crops out along the north side of the fault for most of its length. The diabase probably was intruded along an old fault. Renewed movement on the fault after the intrusion of the diabase produced the breccia zone along the diabase-quartzite contact which later became the channel of mineralizing solutions. Some slight displacement also took place after mineralization. Exploration by diamond drilling shows that the diabase forming the northwall of the fault continues to a depth of more than 1,300 feet below the outcrops of the vein.

South of the vein fault, diabase was intruded as a sill at or near the base of the Pioneer quartzite. The thickness of the diabase sill is not known but exploratory drilling shows that it is at least 600 feet.

Above the winze in No. 1 adit, the top of the Pioneer quartzite on the footwall side of the vein is approximately 100 feet above the level and is exposed in the footwall of the vein by a crosscut 150 feet below the adit level. The contact of the Pioneer quartzite with the underlying diabase sill is not exposed in the mine workings but the maximum depth of the contact below the adit level can hardly be more than 190 feet.

About 1,000 feet eastward from No. 1 adit, the vein passes into diabase and cannot be readily traced, however, the vein here is poorly mineralized and the exposure poor.

At the west end, the Irene vein is cut off by a cross fault which drops a block of Martin limestone into contact with the Pioneer and Dripping Spring quartzites that form the walls of the vein.

The Irene vein occupies a zone of fault breccia ranging from 5 to 20 feet wide. Both walls are generally regular and are separated from the vein by thin zones of gouge. The breccia consists of angular fragments of diabase and quartzite.

Small amounts of metallic minerals occur in most parts of the vein breccia, although only one shoot is known in which the minerals are sufficiently concentrated to constitute ore. This shoot has been largely mined above the adit level.

Oxidation of the ore minerals probably extends to the permanent water level, the elevation of which is not known. The water level is not likely to be much higher than the level of Final Creek, southwest of the property; that is, approximately 300 feet below the 420-foot level, the lowest level in the Irene mine. The principal ore minerals in the oxidized zone are cerrusite and

hemimorphite. Some galena is also recognized. Limonite, manganese oxides and specularite are common. A little vanadinite and descloizite are present in a few places near the margins of the vein.

The ore minerals at depth can be inferred only from the examination of a few small fragments of core reputed to have come from one of the diamond drill holes. Here some light colored sphalerite was recognized in quartz stringers. No galena was seen but is probably present.

The wall rocks of the vein are strong. The vein breccia is firm so that open stope methods of mining could probably be employed should sufficient ore be developed to warrant mining operations.

Practically all that is known of the mineralization at the Doughboy shaft is by hearsay and old newspaper stories. Examination of the dump does indicate chalcophrite and sphalerite in the rock. On the 800-foot level, a 15-foot portion of a 30-foot vein is said to have shown from 2.36 to 7.4 percent copper and from a few cents to $6 in gold and silver. No mention was made of the zinc content except that even after sorting, the ore could not be handled at the Old Dominion Smelter. It is not likely that the vein described is the Irene vein.

ORE RESERVES

On the basis of sampling by the Comstock Extension Mining Co. the 34,451 tons of oxidized vein matter developed by the workings in adit No. 1 between the 420-foot level and the adit level contains 3.45 percent lead, 7.63 percent zinc, and 2.43 ounces of silver per ton. It cannot be considered ore under present conditions. The 58,240 tons claimed in the block above the adit level is probably of similar grade.

A. S. L. DD hole 5 cut 12 feet of vein thickness which averaged 7.14 percent zinc of which 2.66 percent zinc was in the form of oxidized minerals.

The only known sulfide ore is that cut by McIver DD hole 3. On the basis of the intersection of this hole a block of 15,000 tons averaging about 19 percent zinc might be inferred. The vein is split by a 5-foot horse of waste at this point.

Any reserves contiguous to the Doughboy shaft are based entirely on rumor. There is no geologic evidence of their presence.

PRESENT STATUS

At the time of the investigation no work was being done on the property.

The Irene vein has been developed by two adits and related workings. The No. 2 adit explored the eastern portion of the vein but no ore shoots were disclosed. The No. 1 adit developed the ore which was mined and shipped in former days. A winze was sunk from the adit level in the vein for a depth of 280 feet. From this winze, levels at 75, 155, and 275 feet below the adit were opened (Figs. 3, 4, 5, 6, and 7). Some ore was mined from the first of these levels (225-foot level, Fig. 4 and 7).

Ten diamond drill holes were drilled to explore the vein laterally and at depth. This drilling indicated very erratic mineralization with only one hole showing sulfide mineralization of ore grade. A discussion of the data available on these holes is found in the section prepared by the Geological Survey.

Equipment at the Irene workings consists of the following:

1 40-hp single-drum electric hoist with motor, located at the winze in No. 1 adit, complete with cable, sheaves and bucket. This hoist is installed on the adit level near the top of the winze and is in

operating condition.

1 Caterpillar Diesel generator, type ALT, frame 5006, class 3 E, Form A, 20 KW. In operating condition.

1 Buda Diesel model 6 DG 844, direct-connected to Sullivan compressor, 210 cfm. In operating condition.

1 Western Blower Co. Turbine Multiblade fan, size 10, type TR.

1 Buffalo Forge Co. Duplex Conoidal fan, size 7.

1 40-hp electric motor for large blower.

1 15-hp electric motor for small blower.

1 Reo Speed Wagon Flat-rack truck.

1 International 6-wheel-drive truck, used as water wagon.

Miscellaneous mining equipment, consisting of steepers, jackhammers, hose, steel, shovels, picks, track, pipe, cars, etc.

Electric power and lights are carried to the hoist on the adit level as well as to surface installations.

The old Doughboy shaft was sunk to a depth of 965 feet on the Ida May claim some 3,000 feet northwesterly from the portal of No. 1 adit. Several levels were established and drifting done. No maps are available and the only information available is by hearsay and that contained in newspaper articles. Some sulfide copper ore was taken from development headings but the zinc [illegible] unprofitable. The shaft has been retimbered from the collar to a depth of 300 feet. A headframe and electric hoist are in place, as well as other surface facilities. The hoist is powered by a 20-KW Caterpillar Diesel generator set. A Worthington Blue Brute compressor also is set up.

The bottom of the timbered section is at the top of a muck pile which probably is hung up on shaft timbers that have caved in. This muck pile is probably over 30 feet thick and the shaft is presumed to be more or less open below this point.

Equipment at the Doughboy shaft consists of the following:

1 25-hp single-drum electric hoist with motor, complete with cable, sinking bucket, crosshead, etc. In operating condition.

1 Worthington Elko Brute compressor, 315 cfm

1 Caterpillar Diesel generator, type D 311, 20 KW.

1 CP Diamond drill with 3,000 feet EX drill rods and all accessories

Power saws and other miscellaneous mining equipment too numerous to detail.

PROJECT REQUIREMENTS

Any discussion relative to new equipment and other facilities would be contingent on developing ore reserves sufficient to warrant it.

The Comstock Extension mine is about five miles by road from Globe, Arizona, of which 2.3 miles is good blacktop. The remainder is dirt road crossing Final Creek and up Irene Wash, which road would be in bad condition during periods of heavy rainfall. The Southern Pacific Railroad tracks are about 1.7 miles from the mine.

Sufficient manpower, power, water, housing and other related facilities are available in the immediate vicinity.

CONCLUSION

This mine, or prospect, is a long way from being a producing mine. Such vein matter as is blocked out in the Irene workings is low-grade oxidized lead-zinc material of small tonnage and cannot be considered as ore under present conditions. Shipments that have been made in recent years were made at a loss.

Melver DD hole 3 has cut some high-grade sulfide zinc ore but certainly does not develop an ore body. The A.E.L. DD hole 5 cuts some 12 feet of material averaging 7.14 percent zinc. These two holes intersect the Irene vein at approximately the same horizon, about 275 feet apart and give rise to the thought that an ore shoot may exist there. Any vertical continuity is not known. It is approximately 550 feet from the bottom of the winze to the horizon cut by the two drill holes.

It is evident that there is not enough information available upon which to base a logical conclusion as to the value of this mine. Such drilling as has been done does not present a very encouraging picture. Some drilling should be done to prove the extent and value of the ore indicated in the two holes showing stronger mineralization.

The request for $682,000 to place the property in production is not warranted at this time. There is no real ore in sight. The character of mineralization is not well enough known to justify the erection of a mill, without metallurgical tests, should any sulfide ore be developed.

The officers of the Comstock Extension Mining Co. are not mining people. There seems to be considerable bickering within the organization. At a recent directors' meeting a new slate of officers was in the making.

Mr. Robb is a politician, Mr. Joe Gabbito is a jeweler in Ophir, and Mr. William Wunsh is a retired auto dealer from South Bend, Indiana. Mr. Anton Trojanovich is a promotional miner and promoter, a convincing talker but is known to be very unreliable.

RECOMMENDATIONS

It is recommended that this application for a loan in the amount of $682,000 be denied on the basis that there is not enough ore proven to justify such a loan. Such vein matter as is blocked out is too low in grade and of insufficient tonnage to be mined economically.

Although a number of holes have been drilled, only two indicate the presence of zinc in quantity. There is a possibility of trying to extend the ore indicated in McIver DD hole 3 by new drilling and so block out some tonnage, or to extend the winze from the 420-foot level to the horizon of the hole and vein intersection. By establishing several levels it might be possible to delineate an ore shoot that could be mined.

Either of these two programs is purely exploratory in nature. The latter would permit mining if ore was disclosed.

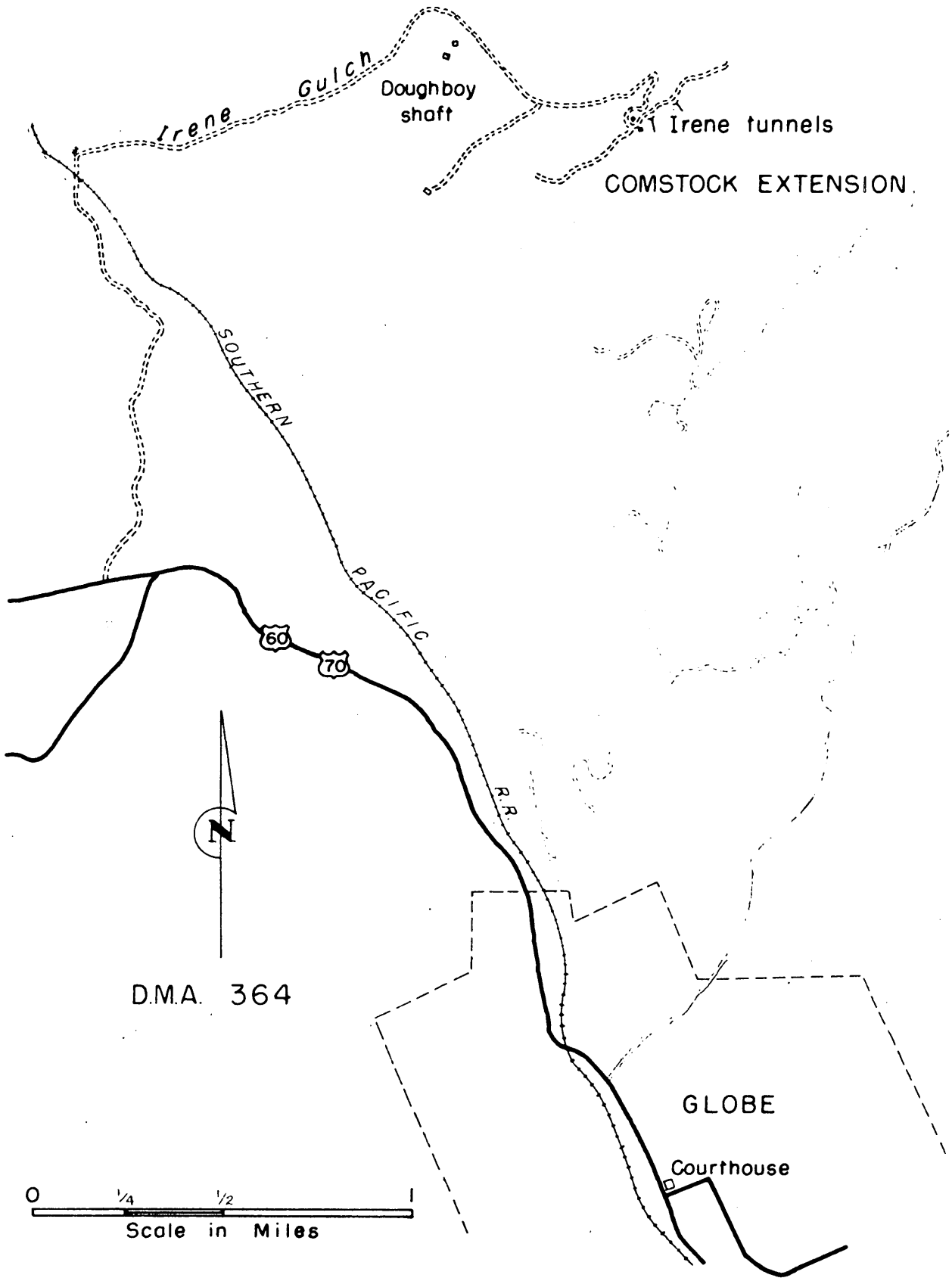

Fig. 1 - Location map, Comstock Extension Mining Company, Gila Co., Ariz.

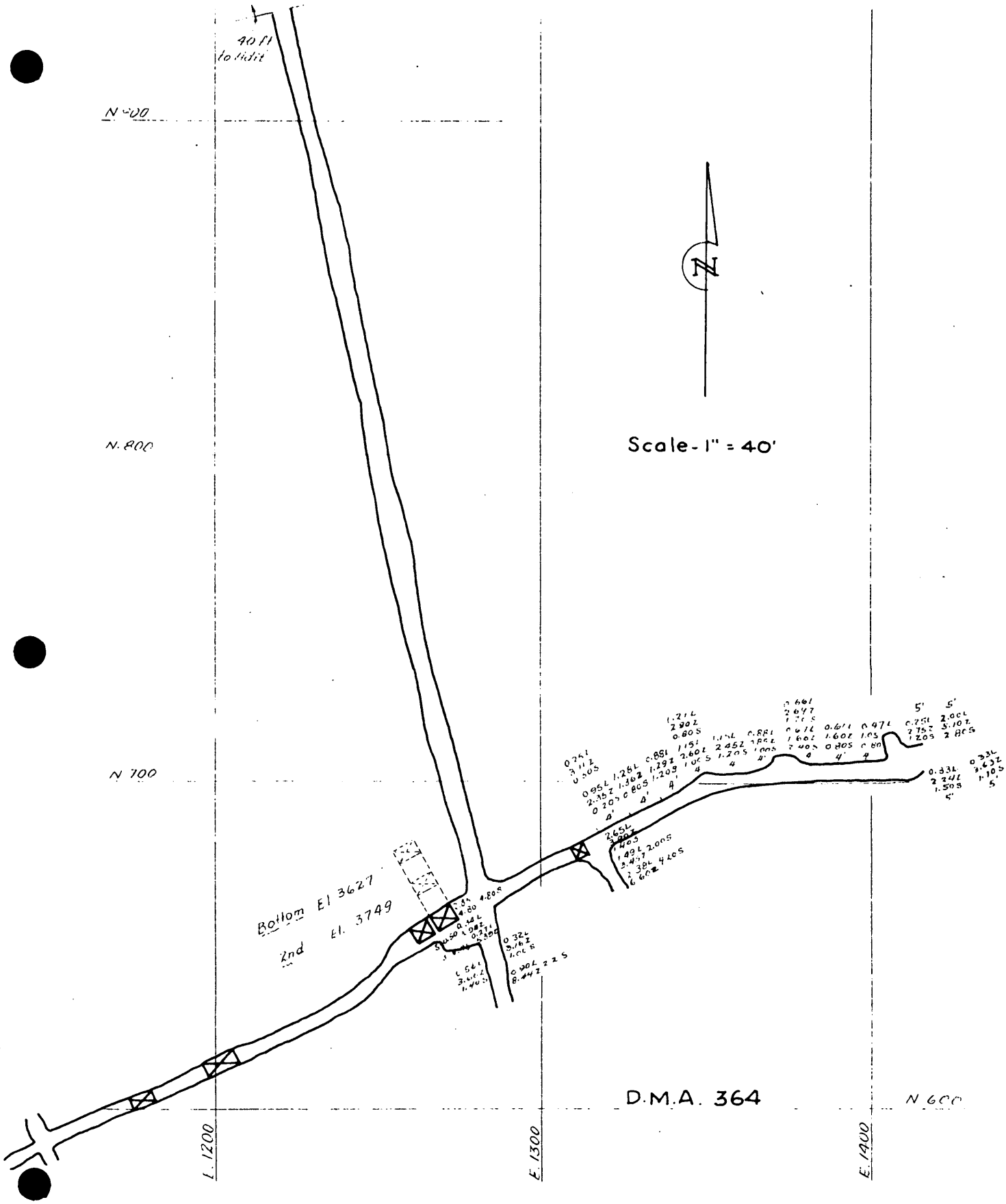

Figure 3.- Adit (150') level, Comstock Extension Mining Company, Gila Co., Ariz.

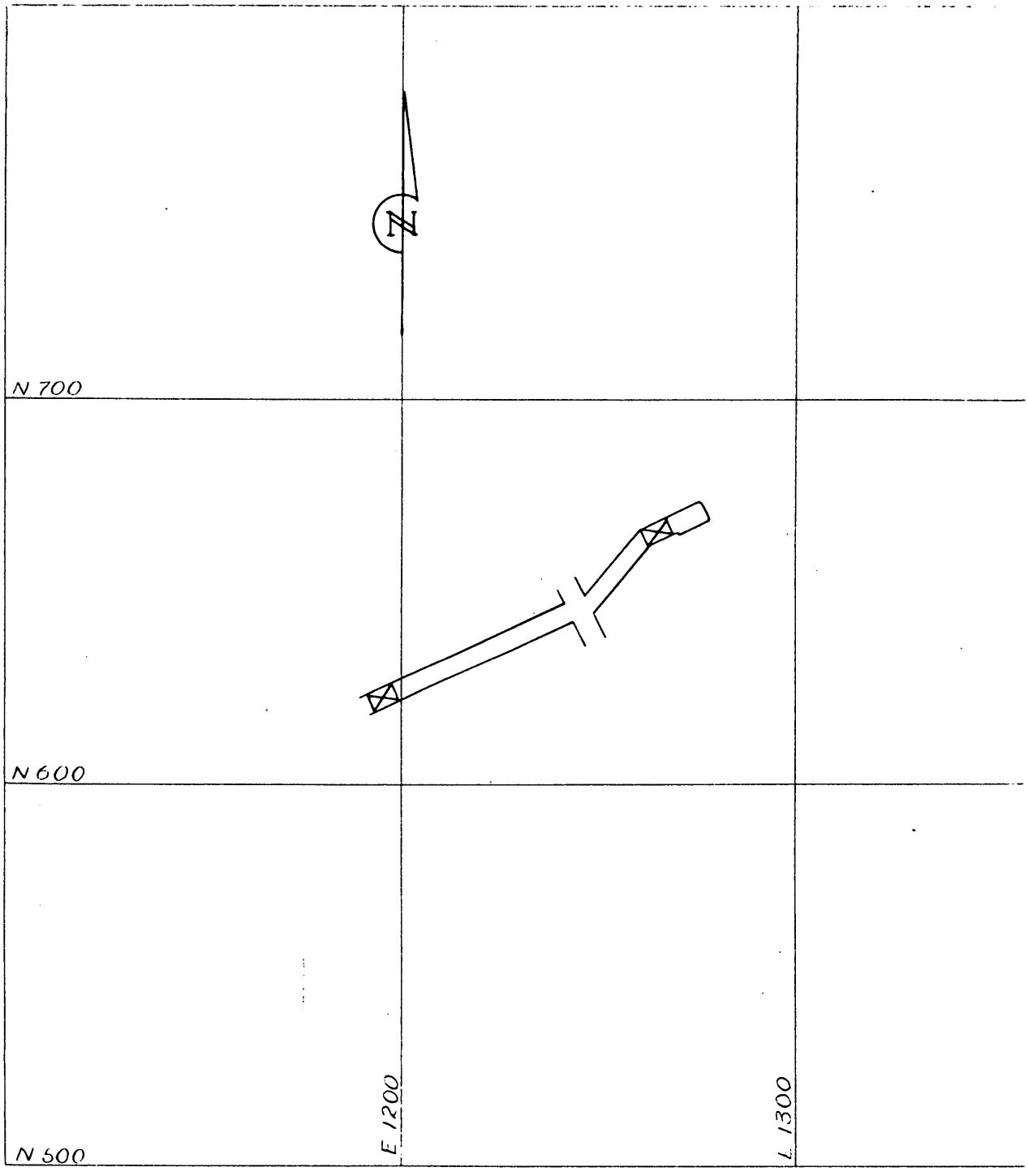

D.M.A. 364

Scale: 1" = 40'

Figure 4.- 225-ft. level, Comstock Extension Mining Company.

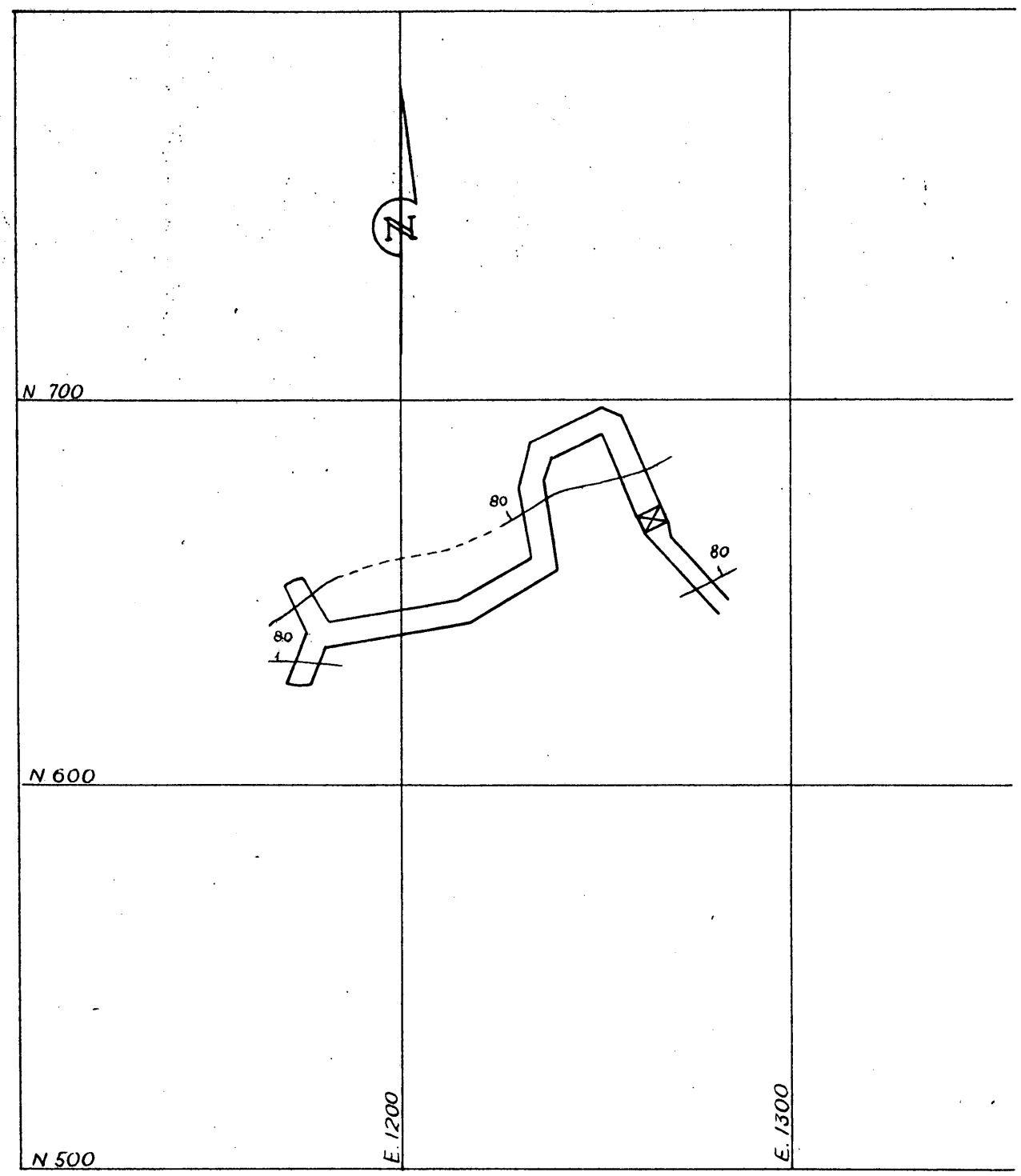

D.M.A. 364

Scale: 1" = 40'

Figure 5.- 298'-ft level, Comstock Extension Mining Company.

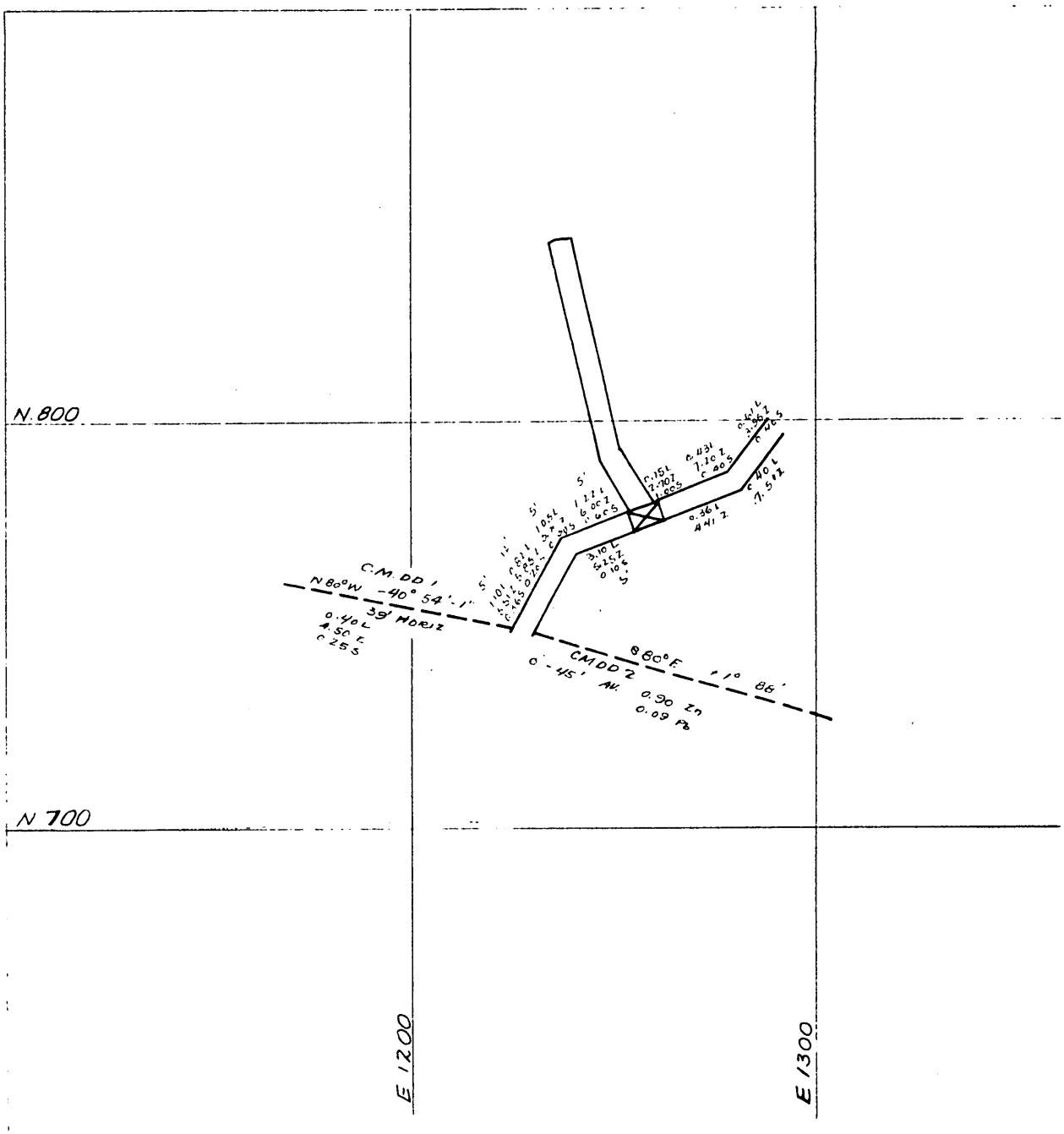

D.M.A. 364

Scale: 1" = 40'

Figure 6,- 420-ft level, Comstock Extension Mining Company.

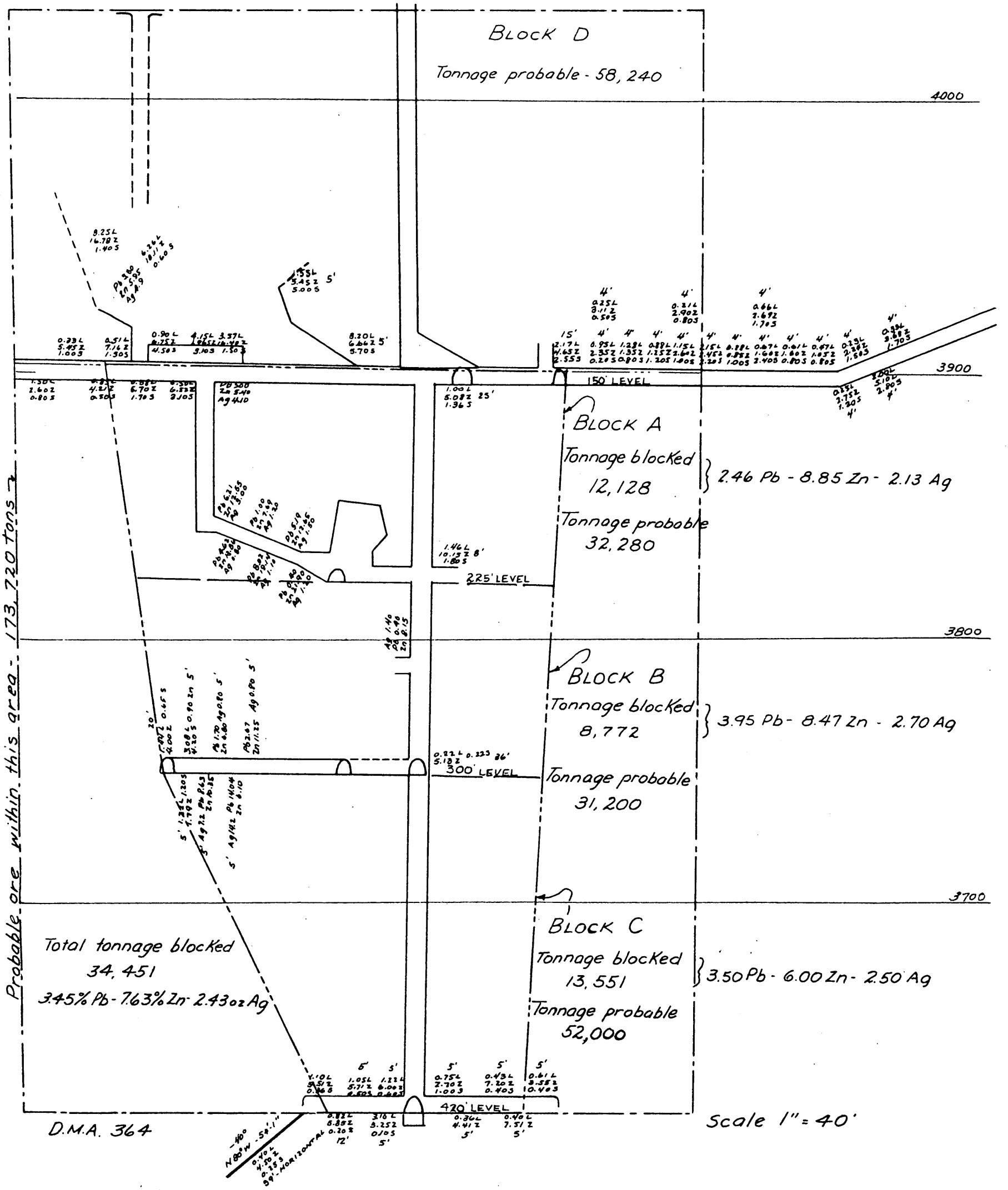

Figure 7. - Section on plane of Irene vein, Comstock Extension Mining Co.

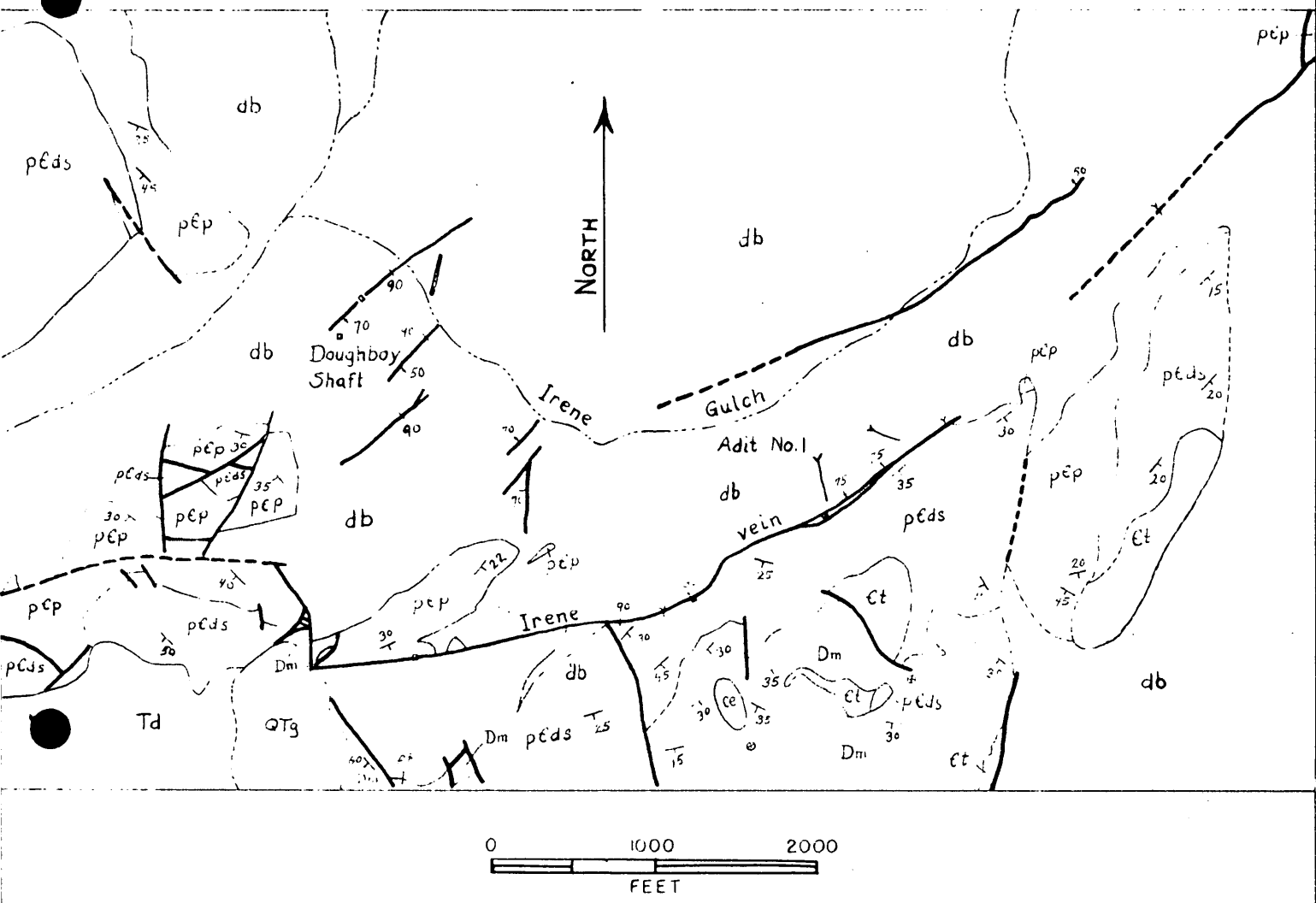

pЄp — Pioneer formation

pЄds — Dripping Spring quartzite

Єt — Troy quarzite

Dm — Martin limestone

Ce — Escabrosa limestone

QTg — Gila conglomerate

Td — Dacite flow

db — Diabase

D.M.A. 364

Figure 8.-Geologic map of part of Globe quadrangle, Arizona.

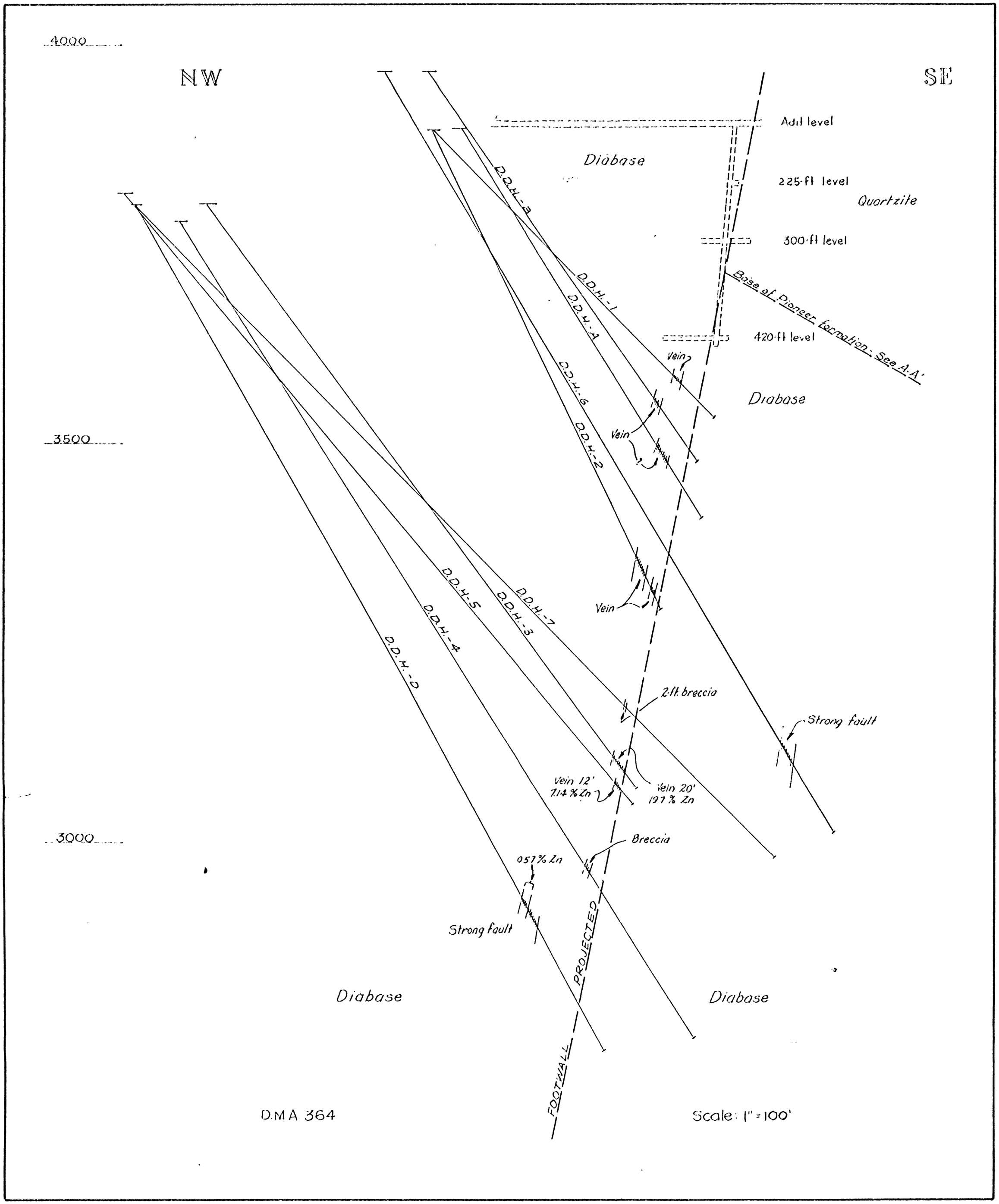

Figure 11.- Composite of drill hole sections, Comstock Extension Mining Co.

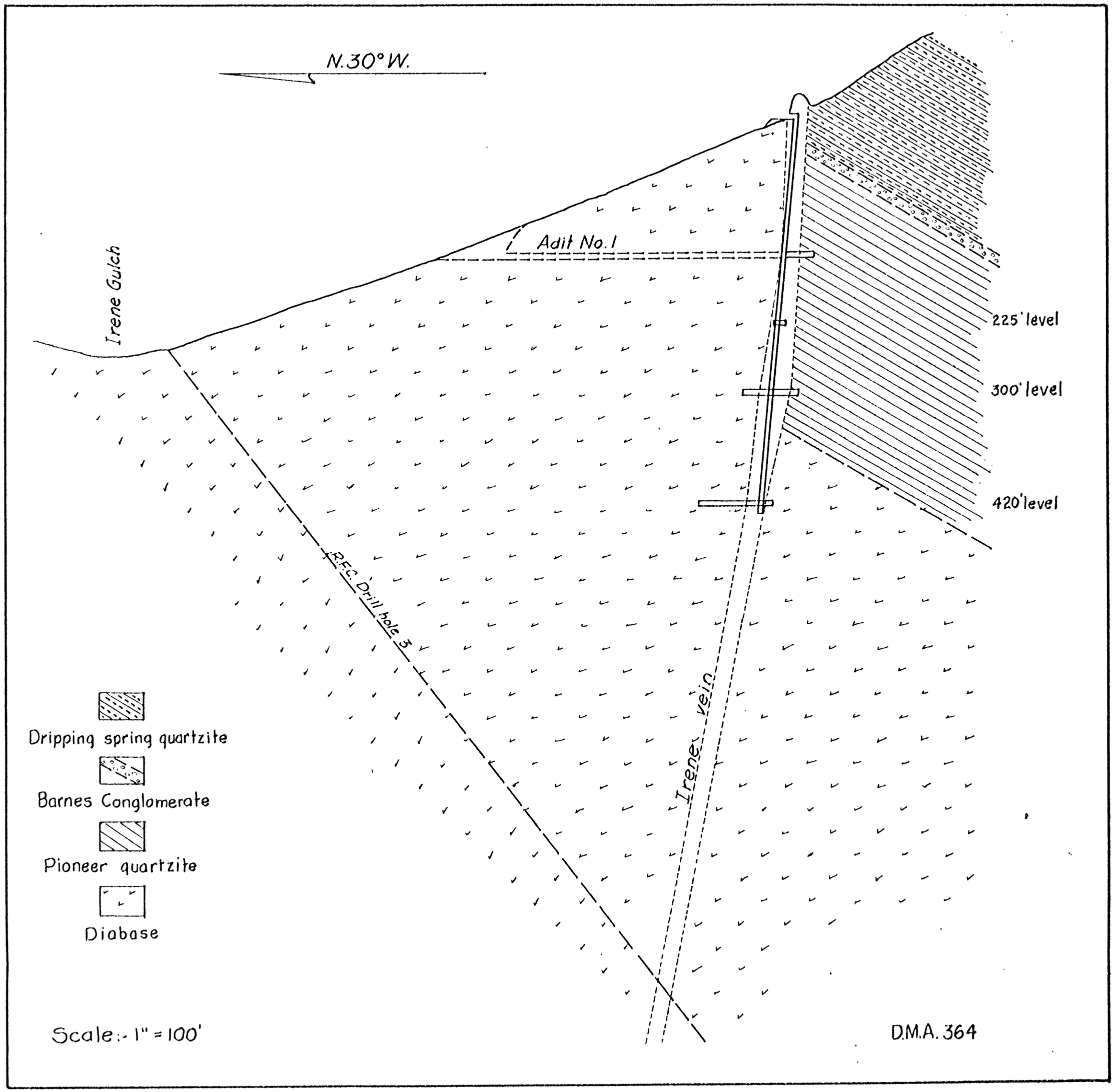

Figure 10. - Section A-A' through winze in Adit No. 1, Comstock Extension Mining Company.

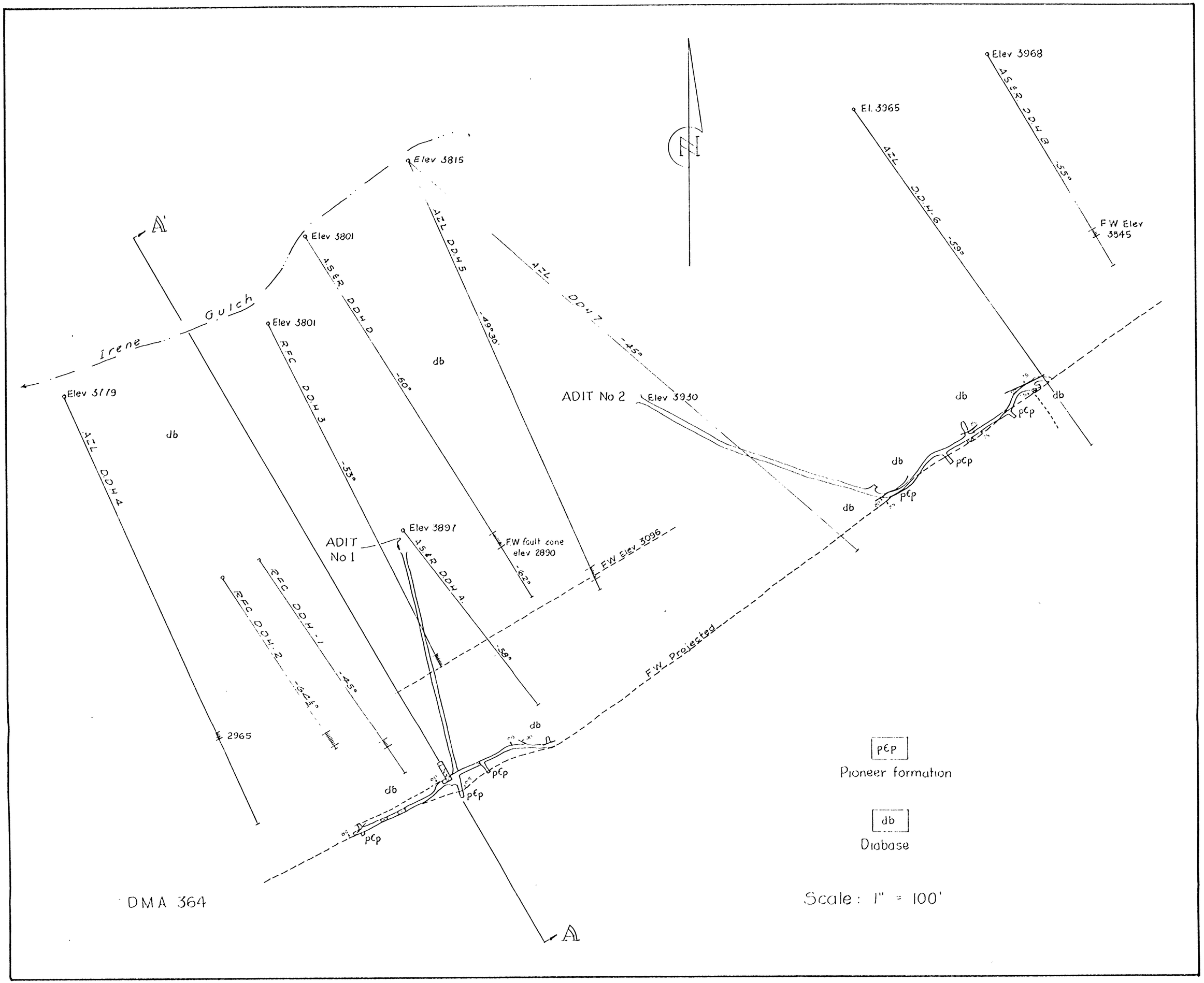

Figure 9.- Plan of Adit No.1 and Adit No.2, Comstock Extension Mining Company.

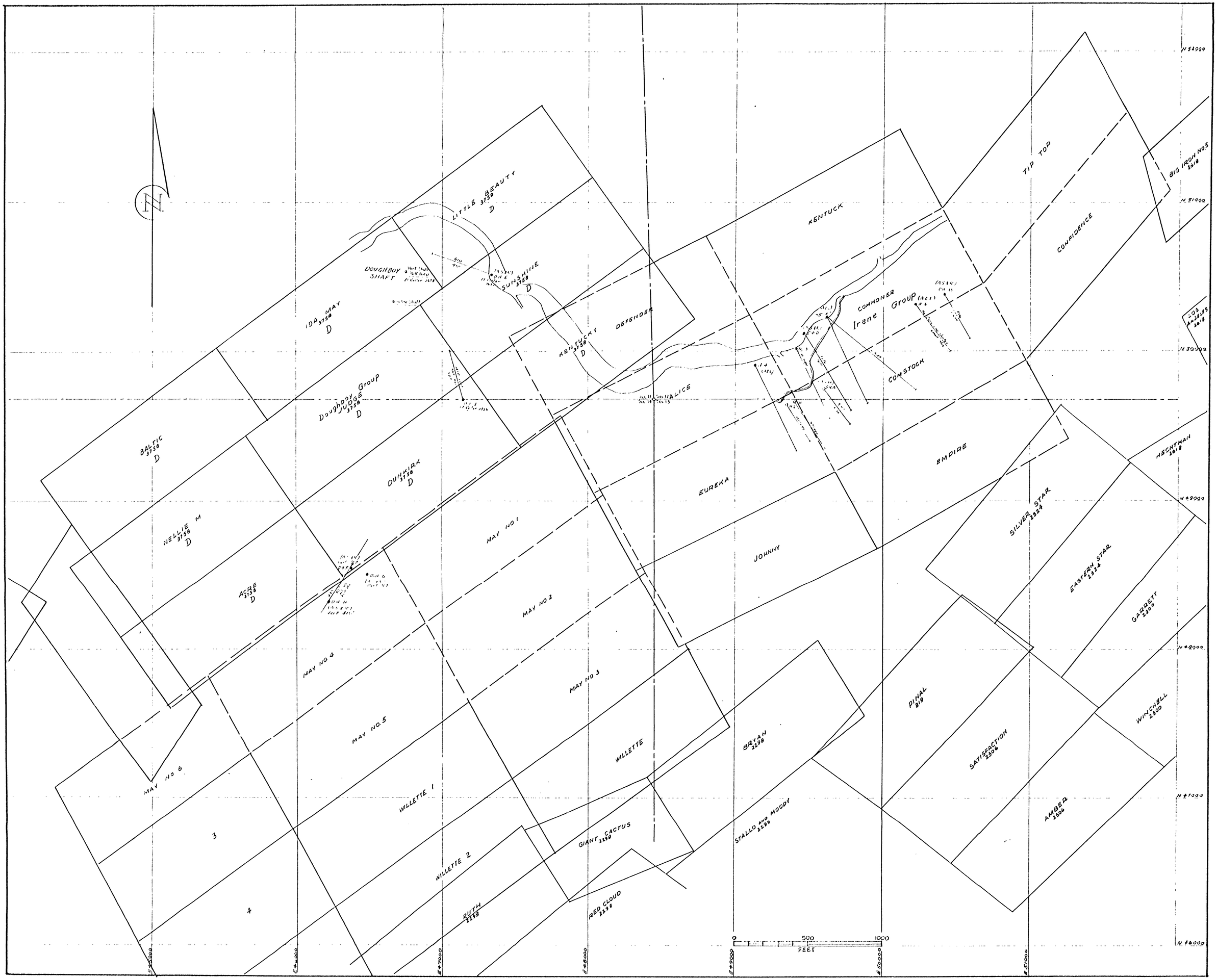

Figure. 2.- Claim map, Comstock Extension Mining Company, Gila Co., Ariz.