MUSCOVITE MICA PROPERTIES

of the

IDAHO BERYLLIUM AND MICA CORPORATION

Avon Mining District

Latah County, Idaho

CONTENTS

History 1

Mica and Mica Plant 2

Properties 3

Surface Facilities 3

Surface Ore Reserves 4

Geology and Mine Development 5

Beryl 8

Beneficiation. 9

Mica 13

Beneficiation 14

Summary and Conclusions 16

Bibliography of Publications Relating to the Muscovite Mine 17

Bibliography of Publications Relating to Beryl and Beryllium 17

Bibliography of Publications Relating to Mica 18

HISTORY

The Muscovite mine was first claimed on March 2, 1883 and worked in 1888 by Woody and Lamb. On March 6, 1893 the adjoining Lawrence property was claimed and both claims were surveyed by Frank Loring two weeks later and filed as Mineral Survey No. 7048. The Muscovite mine was then operated intermittently until 1919 when it got tied up by litigation. There are no accurate records of production prior to 1942. Early production is reputed to amount to 920 tons of cobbed block mica.[1] The total value of the mica production by 1918 has been estimated at $100,000.00[2].

The following production figures are taken from a table compiled by Reed[3] covering the period from October 1943 to April 1945. The open cuts yielded 355,500 pounds of block mica from 14,600 tons of ore mined; 161,000 pounds of block mica were recovered from the dumps and 759,000 pounds of block mica were recovered from 6,620 tons of ore mined underground. During this wartime period of 18 months, a total of 1,276,000 pounds of block mica were produced. The total value of the various commercial forms of this mica was $379,730.36. The mica marketed was only 4.4 per cent of the recovered book mica. The remainder is still available for exploitation as scrap or ground mica.

During this period the Muscovite mine was owned by R. A. Beeghly and G.M. Myers, both of Spokane, Washington, and

1. G. C. Reed, Exploration of the Avon Mica District, Latah Co., Idaho: U.S. Bureau of Mines, R.I. 3898, July 1946.
2. J. D. Forrester, Mica and Beryl Occurrence in Eastern Latah Co., Idaho: Idaho Bureau of Mines and Geology, Pamphlet 58
3. G. C. Reed, op. cit.: Table 2.

operated by C.J. Montag & Sons, of Portland, Oregon. The Muscovite mine was a submarginal property during the years 1943 to 1945; the mine could not operate as a mica mine and make a profit without the government support it received. It was this reason alone which caused the mine to be dormant ever since the government withdrew its support in 1945. All of the previous operators had mined this property for its sheet mica content only. The above figures indicate that only about two pounds of sheet mica was recovered in a commercial form for every ton of ore mined. In the last several years, it has become increasingly apparent that pegmatites must be mined as a unit with methods designed to recover the last ounce of profitable ore, whether it be mica, feldspar, beryl, lithium minerals, tantalite, or whatever of the numerous rare minerals that are likely to be found in a pegmatite. The Idaho Beryllium and Mica Corporation (IB&MC) is fully aware of this necessity and acquired the Muscovite properties in May of 1950, and is well on the way toward mining the pegmatite as a pegmatite and not as a mica mine or beryl mine. Recovery of all the minerals in this pegmatite should make this hitherto submarginal property very profitable.

MINE AND MINE PLANT

The Muscovite mine is located in T. 41 N., R. 2 W., Sec. 22, Latah County; approximately 24 miles northeast of Troy, Idaho, the nearest shipping point of the Northern Pacific Railroad and local headquarters for the IB&MC. The mine may be reached from Moscow, Idaho, the nearest center of commerce, via 26 miles of

surfaced road (Idaho State Route No. 8, East) and 10 miles of graveled road. The route is well marked at all turns.

PROPERTIES

The property of the Idaho Beryllium and Mica Corporation includes the Muscovite and Lawrence claims and other surrounding lands which are shown on the accompanying plate. The Muscovite mine has been rather well developed in the past and sufficient ore reserves are in sight to operate a 150 ton mill for many years. In addition to the underground reserves a great outcrop is found on the property that can be mined by open-cut methods. The dumps of previous operations have been surveyed, mapped, and partially sampled. The tonnage calculations revealed that 80,403 tons of material (dry basis) are available. The sampling already done indicates that the mica content is approximately 20% of these dumps and the BeO content another 1%.

The detailed geology of the Muscovite mine has been reported in various publications and will be referred to rather than reported at this time. These publications are listed in the bibliography.

SURFACE FACILITIES

The photographs and maps included illustrate the various surface facilities available at the present time. Since the purchase of this property the IB&MC has made, among other, the following improvements:

(1) Six miles of road have been graded, drained and graveled.

(2) Living quarters and a mess hall have been provided.

(3) Property lines have been checked.

(4) The tonnage of the dumps have been calculated. (91,911 short

tons in place or 80,403 short tons dehydrated.)

(4) A 25 ton test mill is nearing completion.

(5) Ore bins and haulage ways are being constructed.

(6) The mill site for the planned 150 ton mill has been located.

(7) Water supply has been ascertained.

(8) All equipment necessary for the preliminary operations has been purchased.

(9) Sufficient and competent labor has been recruited.

SURFACE ORE RESERVES

The dumps of previous operations can well be termed ore reserves since recent sampling has indicated that the total mica is well in excess of 20% of the main dumps. Any accurate estimate of the beryl content of the dumps must await results of sampling a number of test pits now being sunk to the bottom of each dump; however, rough sampling has indicated that the BeO content may average 1% of the total tonnage.

The project of determining the tonnage of the dumps was undertaken by the following method: A station was set on each dump and tied into a second order transit-and-tape traverse. Data for topographic maps was obtained by field stadia methods. After a topographic map was drawn of each dump, sections were drawn at appropiate intervals and individual section areas computed. Volume of the material between the sections was obtained by multiplying the average area of two adjacent sections by the length between them. A factor was derived which was used to transpose

these volumes into tonnages, using the values 112 pounds per cubic foot before dehydrating and 98 pounds per cubic foot after drying.

The following results were obtained. (Dumps are numbered according to the traverse station number.)

Dump No.	Weight ("wet")	Weight ("dry")
11	928 short tons	812 short tons
16	11,872	10,388
17	6,229	5,450
18	7,157	6.263
19	19,579	17,131
20	1,271	1,113
22	4,309	3,772
25	20,890	18,278
26	14,600	12,755
27	613	536
28	4,463	3,905
Total	91,911 short tons	80,403 short tons

GEOLOGY AND MINE DEVELOPMENT

The following material is reprinted from Bureau of Mines Report of Investigations 3898 by Glen C. Reed.

"Open-cut mining and surface exploration have partly exposed four distinct structures comprising the Muscovite pegmatites. These are the footwall, central, hanging-wall, and hanging-wall outlier pegmatites. They occupy a curving zone about 550 feet long. This zone ranges in width from 47 feet at its southern limit to a maximum of 100 feet at the arch of a westward-sweeping fold near its northern extremity. The zone trends to the north."

"The footwall member is 260 feet long; its width is 3 to 15 feet. The member is separated from the central pegmatite by 3 to 11 feet of mica schist and from the hanging-wall pegmatite by 15 to 27 feet of mica schist."

"The central pegmatite is the largest of the bodies and comprises about 94% of the plan-sectional area of all pegmatite exposed in the zone. Its greatest length, including one of its branch members, is about 315 feet. Near the northern limit of the zone the structure widens to 50 feet and abruptly splits into two branches curving sharply to the west. A secondary knot has been developed on the west branch immediately north of the split."

"The hanging-wall pegmatite is 15 to 23 feet west of the footwall structure. It has a continuous length of 110 feet. A series of small lenses to the north appear to be an extension of the same zone, thus making the overall exposed length of the structure about 225 feet."

"The several pegmatites comprising the mineralized zone vary greatly from place to place in the same structure as well as from each other in both proportionate mineralogical composition and quality of contained mica. All the pegmatites except the central body are broadly homogeneous. The central body, however, is distinctly zoned into an interior albite-quartz core partly surrounded by a shell of albite, quartz, microcline, muscovite, beryl, and schorl."

"Strategic-quality mica has been produced from the entire length of the footwall dike. As mining progressed, local variations in "richness" were seen from place to place. Early as well as recent production from both open-cut and underground workings has come largely from the footwall structure."

"Of the several pegmatites exposed, the hanging-wall dike

appears to contain the most mica. All but a small part of the contained block mica is worthless (as sheet, but not ground) because of imperfections resulting from post-mineral movement and intense alteration. The dike contains about 1.5 per cent beryl in highly fractured crystals, many of which crumble to powder when slightly disturbed."

"The Muscovite pegmatites have been mined by surface and underground methods over a vertical range of 285 feet from the outcrop to the No. 5 level. In general, the broader structural and compositional features disclosed by the surface operations have been roughly repeated downward to the lowest opening."

"All recent ('43-'45) underground production was taken from the workings of the No. 5 adit. In the East tunnel, the Nos. 1, 2, 3, and 4 levels are inaccessible. Small parts of most of these upper workings have been revealed by the recent open-cut and underground operations."

"The No. 5 adit intersects the hanging-wall pegmatite 485 feet north-east of the portal. Drifts north and south from the cross-cut exposed the body along a strike length of 50 feet. At this point, stope No. 1 was carried 67 feet above the sill. The pegmatite, extracted over a length of 25 feet, was rich in both mica and beryl. The stope was finally abandoned because of the relatively low quality of the block mica recovered."

Other workings are recorded by the various investigators, but many are now inaccessible due to cave-ins. Sufficient descriptions are given, however, to deduce that several thousands of tons of ore remain in place in the Muscovite mine.

Feasible methods of going underground for the ore are now under consideration by the mine superintendent and engineers of the Idaho Beryllium and Mica Corporation. In the meantime, the dumps will provide enough material to keep the 150 ton mill running for over 500 days. Long before this supply is used enough ore should be developed to keep the mill running without interruption for many years.

BERYL

Excellent discussions concerning the mineralogy, production, properties, and uses of beryllium are given in the accompanying photo copies entitled "Growth of the Beryllium Industry" and "Demand Created for Beryllium in War Equipment". It is no wonder that beryl has been recommended for stockpiling by Army and Navy Munitions Board.[4]

The Bureau of Mines Minerals Yearbook for 1948 (included in appendix) states that the reserves of the Muscovite mine have been estimated at 150 to 450 tons.

Reed[5] reports that "BeO is widely, though not uniformly distributed throughout the Muscovite pegmatite. It is assumed that it is all contained in hexagonal beryl crystals although its occurrence in some of the dike material may be determined only by analysis."

---

4. Col. G. A. Lincoln, "Military Strategy and Minerals": Engineering and Mining Journal, vol. 149, no. 5, May 1948. p. 84

5. G. A. Reed, op. cit., p. 9

BENEFICIATION

Until several years ago no means of concentrating beryl was known other than hand picking. The increasing demand for beryllium and the depletion of rich ores has made a means of concentrating low grade beryl ores a vital necessity.

The United States Bureau of Mines has made extensive tests during the last several years on various beryl ores and has had much success in the selective flotation of beryl. The results of these tests are summarized in R. I. 4040 and R. I. 4166.

Metallurgical investigations on the Muscovite pegmatite were carried out by the Bureau of Mines. Flotation testing at minus 48 mesh was done on a head sample containing 0.14% BeO. The tests indicated that 77.8 per cent of the BeO can be recovered in a product assaying 10.5 per cent BeO.

The laboratory flotation procedure[6] developed for the treatment of beryl ores was applied to pegmatite samples from various locations. The essential steps of the concentration practice were as follows: The ore was wet-ground in stages to minus 100-mesh. The coarse, flaky mica was removed by sizing the ground material on a screen with slightly larger openings than the limiting size of the grind. The screen undersize was settled and the finest slime, which actually represented only a very small part of the weight of the ore, was decanted. The sand was conditioned as a pulp of 50 per cent solids with hydrofluoric acid for 30 minutes

---

6. United States Bureau of Mines, Report of Investigation No. 4166 "Flotation of Beryllium Ores."

and then the sands were washed free from acid. If the acid was consumed so that the acidity of the pulp was not excessive, the washing step was unnecessary. Residual hydrofluoric acid from the scrubbing could be recirculated. The washed, deslimed, minus 100-mesh ore freed from mica was next conditioned with oleic acid and pine oil. The beryl was floated, and the rougher concentrate was cleaned in a neutral or basic circuit to depress gangue minerals other tan tourmaline. The tourmaline was floated from the beryl by an amine hydrochloride such as AM-118.5B. With ores containing no tourmaline the cleaning step in an acid circuit was omitted. Meticulous control of the temperature of the pulp was unnecessary.

High-grade concentrates and high recoveries were obtained from beryl ores containing as little as 0.35 per cent beryllia. Fair recoveries and lower-grade concentrates were obtained from ores containing less than 0.35 per cent beryllia.

The flotation method described in U.S.B.M., R.I. 4140 was similar to that described above except that opinion as to desirable size for flotation differed. Lamb[7] reports "In the flotation of beryl, the large loss of beryllia in the slimes, necessitated by the rather heavy desliming required prior to flotation, makes it desirable to float the beryl at as coarse a size as possible." The method used in floating coarse particles was simply to condition the deslimed ore with the proper reagents and then to add fuel oil to the pulp and condition for an additional short period of time. Best results were obtained by agglomerating

---

7, Lamb, F.D., "Beneficiation of New England Beryllium Ores" U.S.B.M. Report of Investigations No. 4040, March 1947, p. 6

the pulp with oil. When oil is added to the pulp which has already been conditioned with dispersing and collecting reagents, it becomes attached to the minerals that are coated with the collector, where the uncoated gangue minerals are not affected. The reaction intensifies the previous collector coating and makes coarse flotation possible. High selectivity is common, and the grade of concentrates is superior to that obtained by usual methods.

A.M. Gaudin[8] summarizes a report on the flotation of non-sulphide minerals in the following manner. "The flotation of non-sulphide minerals is primarily dependent upon:

(a) the ionic character of surfaces of the minerals when present jointly in water;
(b) preferential exchange adsorption of hydrocarbon ions at the surfaces;
(c) the extent of surface on the various minerals;
(d) the relative roughness of surface on the various minerals
(e) the size of the particles.

Storms[9] reports the results of several beneficiation tests on both high and low grade beryl ore. Data resulting from these tests are found in the publication cited. Tabling and magnetic separation were tried but did not make a high-grade beryllia concentrate with satisfactory recovery. The flotation test (similar to those described above) produced the highest grade of beryllia concentrate with the highest recoveries.

Another article[10] pointed out that electrostatic concentration should not be overlooked. Engineers of the Idaho Beryllium and Mica Corporation have been considering the use of the Sutton or

---

8. A. M. Gaudin, "Improving Flotation of Non-Sulphide Minerals;" Engineering and Mining Journal, vol. 146, No. 12, Dec. 1945.
9. W. R. Storms, U.S.B.M. Report of Investigations No. 4024
10. "Beryllium - Its Sources and Uses" Mining and Metallurgy, vol. 24, no. 437, p. 232-4

Johnson separators or modifications thereof. Electrostatic separation utilizes the force of an electric field to produce differential movement of mineral grains. Much research is required before the beryl can be recovered satisfactorily by this means.

Another method under scrutiny is separation of beryl by a Hymphrey Spiral. Correspondence with H. Snedden, of the Humphreys Investment Company, Denver, Colorado, has revealed that it may be feasible to agglomerate the beryl ores and recover the beryl in the spiral. This separation should be practical for two general reasons:

(1) If there is a marked size difference between gangue and valuable minerals, their separation is sometimes due to the sizing action of the spiral, even when gravity differences are small.
(2) The use of reagents for agglomerating, oil-filming, or otherwise affecting one substance in preference to another in an ore has also resulted in highly efficient and economical spiral separations of minerals having nearly the same specific gravity.

It was noted earlier that the beryl of the Muscovite mine is very friable. Any crushing operation should result in the beryl crystals being broken into smaller sizes than the gangue. Thus the sizing action of the spiral should cause a good separation. In the discussion of flotation it was pointed out that the beryl is amenable to agglomeration.

Other information about the Humphrey Spirals that is pertinent to the recovery of beryl can be presented.[11]

(1) Hydraulic siging of feed is usually unnecessary, but may improve separation of minerals differing only slightly in spetific gravity.

---

11. The Humphreys Investment Co., Bulletin No. 10

(2) Total water required by each spiral varies from 15 to 32 gallons per minute, including water for dilution of pulp and from 3 to 7 gallons of clean wash water. Much of the water can be reclaimed and reused.

(3) High recovery is usually obtained with a low ratio of concentration followed by cleaning the first stage concentrate in a second stage and sometimes in a third stage.

(4) Spiral efficiency usually decreases below the 200 mesh size. Therefore, care should be taken in crushing and grinding the ore to liberation size, to produce a minimum of values in the minus 200 mesh sizes.

Other information pertaining to the use of the spiral may be found in Bulletins 8, 9, and 10 of the Humphreys Investment Co.

From the above material it can be realized that the Idaho Beryllium and Mica Corporation will be able to concentrate the beryl from the Muscovite mine into a marketable product. It is impossible for the writer to present any detailed estimates or production or production costs at this time.

M I C A

According to various analyses and sampling discussed earlier, the Muscovite mine contains approximately 16,000 tons of mica of varying quality in the surface reserves and many more thousand tons in underground reserves.

The many varied uses of mica are well known and will not be reported here. It may be pointed out, however, that mica was also included in the list of strategic minerals recommended for stockpiling (previously cited). Several reprints and booklets reviewing the occurrence and uses of mica are included in the appendix. The booklet concerning Mineralite (Copywrited Trademark) mica is especially pertinent since it points out the many properties and uses of ground muscovite mica, the main product of the Idaho

Beryllium and Mica Corporation. At the present time, ground mica is not considered to be an especially strategic product; however, ground mica, because of its varied uses, may substitute for many other materials that are considered to be more vital to the industry of the country.

BENEFICIATION

The concentration of the mica content of the Muscovite does not present any great difficulty. Various means of concentration are available, some of which will be briefed at this time.

The United States Bureau of Mines, Salt Lake City division, has made several tests on a 1000 lbs. sample of the ores from the Muscovite mine dumps. They report that the mica can be freed from the gangue at about 35-mesh and a plus 90 per cent mica concentrate floated by simple reagent additions.

Munson and Clarke[12] report that stage crushing using free-impact crushing and selective screening on slotted and square-mesh screens yields the cleanest concentrate and the highest recovery of scrap mica from pegmatites of the Black Hills of South Dakota.

Taggart[13] describes several successful methods of mica beneficiation. On page 13-18 he reports the successful use of an induced-roll separator in the separation of muscovite mica from run-of-mine pegmatite ore. On pages 11-139 Taggart states that sizable commercial operations are recovering mica from pegmatites on pneumatic tables.

---

12. Munson and Clarke, USBM Report of Information No. 4190
13. A. F. Taggart, Handbook of Mineral Dressing: Wiley Handbook Series, Jan., 1948.

The De Anza Engineering Co., manufacturers of the De Anza Mill are working closely with the Idaho Beryllium and Mica Corporation in designing a beneficiation process for the Muscovite mine ores. At the present time, these companies are doing much research work in collaboration with the Humphreys Investment Company and the State College of Washington Mines Laboratories. The object of this research is to perfect a means of using the Humphrey Spiral concentrator in conjunction with the De Anza mill to produce a high grade concentrate of finely ground mica at lowest possible cost.

Due to its simplicity, the Humphreys spiral is one of the most economical concentrating devices known. Installation cost is low, $500.00 per 5-turn spiral, and maintenance is very low, since there are no moving parts. Correspondence with the Humphreys Investment Co. has revealed that the spiral is capable of recovering up to 98% of the mica in the spiral feed. The capacity of a single spiral, when used to recover mica, is approximately one ton per hour. The basic principle of using spirals to concentrate mia is that the flat, tabular micaceous minerals, because of their shape, are caught in the fast running water toward the outside of the spiral stream and are discharged from the bottom of the spiral in the outer portion of the stream, where they are recovered by dividing this discharge into outer and inner portions. A complete description of the spirals is given in Bulletin No. 10 of the Humphreys Investment Co., included in the appendix.

The De Anza Mill, which is to be used for the fine grinding of the products of the Muscovite mine has been proved capable of performing the grinding operations required.

SUMMARY AND CONCLUSIONS

The Muscovite properties of the Idaho Beryllium and Mica Corporation possess all the attributes of a sound mining investment. Sufficient ore reserves are in sight for many years of operation, efficient beneficiation processes are available to produce a marketable concentrate, transportation facilities are available and there is a ready market for all products of the concern.

BIBLIOGRAPHY OF PUBLICATIONS RELATING TO THE MUSCOVITE MINE

Andersen, A. L., "Mica Deposits in Latah County, Idaho". Idaho Bureau of Mines and Geology, Pamphlet 14

Andersen, A. L. "Genesis of Mica Pegmatite Deposits, Latah County, Idaho". Economic Geology, vol. 28, no. 1, p.41-58

Anonymous, "Idaho Beryl Deposits found Important". Ceramic Age, Vol. 21, no. 5., p. 141, May 1933.

Forrester, J. D., "Mica and Beryl Occurrence in Eastern Latah County, Idaho". Idaho Bureau of Mines and Geology, Pamphlet 58.

Page, L. W., "Some Mica-Beryl Prospects, Avon District, Latah County, Idaho". U.S. Geol. Survey. Preliminary Rept.

Starret, D. B., "Mica in Idaho, New Mexico and Colorado". U.S. Geol. Survey Bulletin 530, pp. 375-390. 1923

Stoll, W. C., "Geology of the Muscovite Mine, Latah County, Idaho" Geol. Survey, Preliminary Rept.

Tullis, E.L., "Geology and Petrography of Latah County, Idaho." Unpublished manufscript. (June, 1940)

Reed, G. C., "Exploration of the Avon Mica District, Latah County, Idaho". U.S.B.M. R.I. 3898, July 1946.

BIBLIOGRAPHY OF PUBLICATIONS RELATING TO BERYL AND BERYLLIUM

Anonymous, "Beryllium in War Equipment" Mining Journal, Dec. 30, 1943, p. 3.

Anonymous, "Beryllium - Its Sources and Uses", Mining and Metallurgy, vol. 24, No. 437, pp. 232-234

Kennedy, J.S. and O'Moara, R. G., "Flotation of Beryllium Ores". U.S.B.M. R.I. No. 4166, Jan. 1948.

Lamb, F.D., "Beneficiation of New England Beryllium Ores". U.S.B.M. R.I. No. 4040, March 1947.

Lincoln, G.A., "Military Strategy and Minerals" Eng. & Min. Journal, vol. 149, No. 5, May 1948, p. 84.

Marks, G.W. & Jones, Betsy M. "Spectrochemical Determination of Beryllium in Ore Samples". U.S.B.M. R.I. 4363, Nov. 1948.

Newton, J., "Beryllium and Beryl". Idaho Bureau of Mines and Geology Inf. Leaflet No. 1

Sawyer, C.B. & Sloman, H.A., "The Beryllium Industries of Germany and Italy (1939 to 1945)" Fiat Final Report No. 522 Field Information Agency, Technical.

Sawyer, C.B., "Growth of Beryllium Industry" Nucleonics, Dec. 1947, p. 81

Storms, W.R., "Iron Mountain Beryllium Deposits, N.Mex." U.S.B.M. R.I. 4024, March 1947.

Taggart, A.F., "Handbook of Mineral Dressing" Wiley Handbook Series, Jan. 1948.

BIBLIOGRAPHY OF PUBLICATIONS RELATING TO MICA

Anonymous, "Modernizing the Production of Wet-ground Mica" Eng. & Min. J., vol. 149, no. 6, June 1948.

Banning, L.H. & Lamb, F.D., "Screening flat and elongated pieces from crushed stone" U.S.B.M. R.I. 3781, Sept. 1944

Billings, "Problems of Mica Supply" Eng. & Min. J. vol. 145. no. 8 Sept. 1944.

Bowles, O., "Mica" U.S.B.M. R.I. 2357, 1922.

Choudbury, R.R., Handbook of Mica: Chemical Publishing Co. Brooklyn, N.Y.

Gaudin, A.M., "Improving the Flotation of Non-Sulphide Minerals" Eng. & Min. J., Dec. 1945, p. 91

Gwinn, G.R., "Strategic Mica" U.S.B.M. I.C. 7258, 1943.

Harness, C.K., "Natural Mineral Paint Extenders" U.S.B.M. I.C. 7264

Horton, F.W., "Mica" U.S.B.M. I.C. 6822, 1941.

Humphreys Investment Co., Bulletin No. 10

Houk, L.G., "Marketing Strategic Mica" U.S.B.M. I.C. 7219

Jahns, J.H., "Milling N. Mexico Scrap Mica" Eng. & Min. J., vol. 149, no. 5, May 1948, pp. 96-100

McLaren, D.C., "Mica and Its importance": Can. Min. J., vol. 66, no. 5 May 1945.

Munson, G.A., "Recovering Scrap Mica from Pegmatite in S.D." U.S.B.M. R.I. 4190, Feb. 1948.

Myers, W.M., "Use of Flocculating Reagents for Recovery of Fine Mica", U.S.B.M. R.I. 2798

Ralston, O.C., "Lamellar Grading of Powdered Mica", U.S.B.M. R.I. 3662

Ralston, O.C., "Flotation and Agglomerate Concentration of Nonmetallic Minerals" U.S.B.M. R.I. 3397, 1938

Tucker, E.M., "Mica" U.S.B.M. Minerals Yearbook, 1948

Wemlinger, C.A., "Colorado Pegmatite Deposit Yields Beryl and Mica", Eng. & Min. J., Nov. 1950.

1 Y
2 W
1 Thru 2 Thru 6
1 C

So. 157 Howard Street
Spokane, Washington

April 10, 1951

AIR MAIL

Mr. Landon F. Strobel
Executive Secretary
Defense Minerals Administration
Department of Interior
Washington 25, D. C.

Dear Mr. Strobel:

I am enclosing herewith original and three copies of a memorandum from DMA Field Team, Region II, referring to Docket DMA 333, Idaho Beryllium and Mica Corporation.

Will you please pass this along to the Nonmetallics Commodity Committee.

Sincerely yours

A. E. Weissenborn
Executive Officer, DMA,
Field Team, Region II

Enclosures

cc: U.S.B.M.-Spokane, Wn.

So. 157 Howard Street
Spokane 8, Washington

April 10, 1951

Memorandum

To: Nonmetallics Committee, Defense Minerals Administration

From: Field Team, Region II

Subject: Docket, DMA #333
Idaho Beryllium and Mica Corporation

The property of the Idaho Beryllium and Mica Corporation near Troy, Idaho, was visited by geologists from the Geological Survey and by an engineer and a metallurgist from the Bureau of Mines in accordance with instructions from the Commodity Committee. Appendix A is a memo from Klepper and Kiilsgaard; appendix B is a memo from Reed of the Bureau of Mines. A metallurgical report is not yet available, but it is believed that pending receipt of this report enough information is available so that a preliminary decision may be made by the Commodity Committee.

Certain things are evident:

(1) The applicant has approximately the tonnage of dump rock claimed and these dumps contain appreciable quantities of non-strategic mica and a considerable amount of beryl. The pegmatite material and schist wallrock are badly intermixed. There is no recoverable sheet mica in the dumps as they were thoroughly reworked during the last war. The applicant does not intend to recover sheet mica from the reworking of the old dumps.

(2) The applicant has already invested a considerable amount of money in camp construction and new buildings and in the purchase of acquisition of certain milling machinery.

(3) It is conceivable that between 50 tons and 250 tons of beryl might be recovered from the dump. This amount of beryl, although not large, may be significant in the view of limited domestic production. However, the beryl alone could not repay the cost of treating the dumps and, therefore, recovery of beryl must be considered as a by-product. It is apparent that the success of the operation will depend upon the production of scrap mica from the dump.

(4) The applicant presents evidence in the form of letters and other correspondence, which apparently supports his contention that there is a large demand for wet ground mica in the Los Angeles area for use in the marine paint and tire industries. The difference in freight rate between $50.40 from Spruce Pine, North Carolina to Los Angeles, and $18.00 from Troy, Idaho to Los Angeles, will undoubtedly put him in a favorable competitive position.

(5) The applicant proposes to grind the dump material in a De Anza mill, the discharge from which would go to a classifier and thence to a bank of Humphrey spirals, which will separate the mica from the other minerals. The tail from the Humphrey spirals will be treated for the recovery of beryl and then discarded. The mica will go to a second De Anza mill where the mica will be delaminated and fine ground. The first De Anza grinding mill is in operation, and it apparently can successfully grind and delaminate the mica. This is the coarse grinding unit treating the crude dump material before separation.

There are a number of other factors, however, which must be considered:

(1) One De Anza mill is on the property, and in experimental operation; the Humphrey spirals are reported to be on order but have not yet arrived. Therefore, it is not possible to tell, except by laboratory tests, how successfully the spirals will separate mica from the other material in the dump. A paper in the March 1951 issue of Mining Engineering discusses the separation of mica from the waste by the use of Humphrey spirals, but we do not know how clean a separation could be made on this particular material.

(2) We do not have a clear understanding of how the applicant proposes to recover the beryl from the discharge from the spirals. Presumably, flotation will be used, but the details of the process are not clear to us. Tests previously made by the Bureau of Mines indicate that beryl can be separated by flotation, but that the recovery is relatively low and the cost is high.

(3) The material treated will be mixed pegmatite and schist. The pegmatite contains muscovite, whereas the schist contains both muscovite and biotite. The Humphrey spirals will obviously not separate the muscovite from the biotite. Applicant claims that this can be done by electro-magnetic methods, which would, of course,

add to the cost. Investigations on biotite separation are reported in progress at Washington State Experimental Station at Pullman. Applicant further claims that for many uses the presence of biotite would not be detrimental. As far as could be ascertained from inspection of the specifications for the mica used in marine paint, there appears to be nothing specifically stating what proportion of biotite could be tolerated. For certain special satin finish paints, biotite doubtless would be objectionable. The advice of the commodity specialists of the Bureau of Mines and the Geological Survey on specifications for paints and other uses of ground mica is requested.

Answers to some of the questions raised by the commodity committee are given below:

1. BeO versus beryl--both were referred to in the application, but this represents carelessness in the choice of words in the application. Stoll's data (Prof. Paper 229) are used throughout and in each case beryl is meant.

2. In the application a 25 ton mill is proposed. A report attached to the application discusses a 150 ton mill. The flow sheet attached to the application is for a 50 ton mill. Actually, a mill with a nominal capacity of 25 tons is planned. Applicant believes that this could handle up to 50 tons on a 24 hour a day basis, but it is referred to in the application as a 25 ton mill. And this is what is planned. The 150 ton mill is a dream which will materialize only if the project is successful.

3. The information requested on markets has already been answered.

4. Stoll's report indicates, according to the letter from the Commodity Committee, that the dump contains little mica. Stoll is referring to block mica suitable for sheet and punch; he is not referring to mica suitable for grinding. The operators do not intend to produce sheet mica until they go to underground or open pit mining, which would only be after the present project of scrap recovery is in operation. In their application the operators mean that they can produce a thousand pounds of block mica from 25 tons of pegmatite when they go to hard rock mining. This is in conformity with Stoll's figures in Professional Paper 229.

5. Water supply for the mill will be obtained from the old mine workings. Under present weather condition, it is not possible to determine whether this will be an adequate water supply.

Reed, of the Bureau of Mines, questions whether it would be adequatefor the operation of even a 25 ton mill. Definite information on this point will require further investigation when the weather moderates.

Recommendations and Conclusions: Investigations made by the field team indicate that the beryl produced from the applicant's proposal will not be sufficient to carry the cost of the operation nor to justify the loan requested, and it must, therefore, be justified on the basis of ground mica production. Preliminary investigations indicate that the production of ground mica might be feasible, but that a number of points, including extensive metallurgical testing, will require further investigation before it can be determined whether the project would be successful. The advice on the Commodity Committee is, therefore, sought as to whether a DMA loan can be justified on the basis of ground mica with by-product production of beryl. If it can, then further investigation would be required; if it cannot, it would be pointless to spend further time on this proposal. A reply is requested so that appropriate action can be taken, and it is also requested that the applicant be informed directly from the Washington office of the committee's decision. The docket itself is being retained here pending final word of the disposition of the application.

One point should be kept in mind, although it has only an indirect bearing on the present on the present application. The property produced substantial amounts of strategic mica during World War II; by assisting the applicant in his proposal to produce more-strategic ground material, he might be encouraged to operate the mine for the production of strategic mica at a later date. A second point is that the applicant is pioneering a new approach to fine grinding of scrap mica and deserves some encouragement. Because the application may be reconsidered, we are retaining the docket here pending further instructions.

By Field Team, Region II

A. E. Weissenborn, Executive Officer
U. S. Geological Survey

M. E. Volin, Chief, Mining Division
Region II, U. S. Bureau of Mines

So. 157 Howard Street
Spokane 8, Washington

April 10, 1951

Memorandum

Appendix "A"

To: Field Team, Region II

From: M. R. Klepper and Thor Kiilsgaard, U.S. Geological Survey

Subject: DMA Docket No. 353, Idaho Beryllium and Mica Corporation

On March 5, 1950 M. R. Klepper and Thor Kiilsgaard visited the Muscovite mine in Latah County, Idaho in company with Mr. Allan White, President of De Anza Engineering Co. De Anza is installing a mill for recovery and wet grinding of mica from dump rock and eventually from ore to be mined at the Muscovite mine. The applicant proposes to install a unit for recovery of beryl should his request for a lean be granted. The examination was made in an attempt to clarify discrepancies between the application and a rather comprehensive and up-to-date geologic description presented by W. C. Stoll in U.S. Geological Survey Professional Paper 229 (pp. 36-42).

The applicant proposes to mill mica-bearing dump rock and to recover therefrom wet-ground mica and beryl. He has surveyed the dumps and estimates that they contain about 80,000 tons of rock, which is in accord with Stoll's estimate of 100,000 tons based on less precise measurements. On these dumps he has sunk five test pits through the full thickness of dump material and collected samples by setting aside every tenth shovelful and quartering the product. The samples have not yet been tested and currently are stored at the mine pending completion of the mill.

The applicant accepts Stoll's estimate of total beryl content of the dumps. A point of fundamental importance, therefore, is whether the dumps are so disposed that the parts composed predominantly of pegmatite can be "mined" selectively at low cost or whether for the most part the admixture of pegmatite and schist is so intimate that no separation in "mining" is possible. No data on this important point could be obtained because of thick snow cover at the time of our examination. Glenn Reed, who sampled the dumps for the Bureau of Mines during the war, states that the schist and the pegmatite are pretty badly intermixed.

Two extreme cases can be supposed for purposes of calculation:

(1) If the pegmatite and schist are so intimately mingled as to make selective "mining" impractical, then about 80,000 tons of dump must be "mined" and milled to yield between 80 and 300 tons of beryl, assuming that the operator's estimates of dump tonnage and Stoll's estimate of grade are correct. According to these estimates, at 80 percent recovery of beryl each ton of dump rock milled would yield between 1 and 6 pounds of beryl.

(2) At the other extreme, if Stoll's maximum estimated tonnage of pegmatite (30,000) could be "mined" and milled selectively and if this tonnage contained virtually all of the beryl, each ton of rock milled would yield, at 80 percent recovery, between 2.6 and 15.6 pounds of beryl. Stoll estimates that at least 75 percent of the pegmatite is mixed with three times as much schist. Therefore, it appears likely that the extremes mentioned above will serve as limits, and that the tonnage of dump rock "mined" and of beryl recovered will fall somewhere between the extremes. The amount of beryl recovered per ton of rock treated will expectably be greater if mining is selective, but the ultimate yield of beryl will be less. In order to make estimates of a much higher degree of precision, it would be necessary to conduct a comprehensive and probably unwarrantedly expensive and time-consuming program of dump sampling, inasmuch as beryl is considered to be a by-product of an operation whose economic success is dependent primarily on production of ground mica.

In the foregoing discussion no consideration has been given to the scrap mica potential of the dump rock. Probably the only satisfactory manner in which this can be determined is by actual milling tests. Furthermore, the mica content of the dumps will have to be almost the sole factor in determining what can be treated, for beryl, though it may contribute to the strategic feasibility of the project, will probably not add greatly to its chance of economic success.

It should also be mentioned that the operators contemplate open pit and possibly underground production after the reserve of dump rock has been exhausted. In this type of operation, beryl might contribute more significantly to the economic success of the operation, for the 5000 tons of pegmatite amenable to open pit mining are estimated by Stoll to contain about 1 percent beryl. The 8,000 tons of indicated reserve suitable for underground mining also are estimated by Stoll to average nearly 1 percent beryl.

The property produced substantial quantities of sheet mica in World War II and under favorable economic conditions might produce additional quantities of sheet mica (see Professional Paper 229). It should be emphasized, however, that the applicant has no present intention of re-opening the mine until the reserves of dump rock are exhausted. There is no intention of recovering sheet mica from the dumps and recovery of sheet mica has no direct bearing on the present application. If the applicant's proposal for the recovery of mica for grinding from the dumps were successful, he might be encouraged to mine new rock from which sheet mica might be recovered.

In view of the foregoing, the desirability of installation of beryl recovery unit seems to hinge almost entirely upon the feasibility of the proposed method of milling. If the method can make an 80 percent recovery of beryl from rock treated, and if the dumps and indicated open pit and underground reserves are mined, a production of beryl somewhere between 180 and 425 tons might be expected. In short, there is a possibility of making a by-product recovery of substantial amounts of beryl but the financial success of the proposal is dependent on the recovery and sale of ground mica.

So. 157 Howard Street
Spokane 8, Washington

April 10, 1951

Memorandum

Appendix "B"

To: A. E. Weissenborn, USGS, 157 So. Howard, Spokane, Wash.

From: Glenn C. Reed, USBM, 1207 N. Division, Spokane, Wash.

Subject: Idaho Mica Beryllium Corporation - DMA Docket 535

The following will confirm our telephone conversation of April 9, 1951.

After visiting the subject operation and meeting company officials over the weekend, I have concluded that an application for either lean or purchase contract by the Idaho Mica Beryllium Corporation is not justified at the present time. As you probably know, this organization has a unique grinding machine which actually delaminates mica in a rapid continuous wet process. Incidentally, this unit is the first and only one in existence at the moment.

Much remains to be done before the unit can be incorporated in a suitable flow sheet to produce sized and cleaned ground mica. Some of the remaining problems are classification, separation of biotite, and dewatering.

I propose to discuss the problem more fully with White on his return to Spokane. His organization unquestionably needs technical assistance badly. We may be able to arrange for such assistance from the metallurgical section at Albany. This, of course, will be decided by Mr. Shelton.

At any rate, a 300-pound sample composited from the several dump test shafts is being ground in the De Anza unit and will be forwarded to the Albany laboratory for investigation in accord with Bardill's earlier request.

/S/ Glenn C. Reed

cc: S. M. Shelton
M. E. Volin

GCR:lfm

COPY

THE DE ANZA ENGINEERING COMPANY

420 Market Street, San Francisco 11, California

The De Anza Mill patented

November 1st, 1951

Field Office: 424 Delgado Street
Santa Fe, New Mexico; Ph:2-0632

Mr. Waskey, Assistant Engineer
Industrial Minerals Branch
DMA, New Interior Building
Washington, D. C.

Re: DMA Application No. 1800

Dear Mr. Waskey:

You will probably remember the writer, as I visited with you for a short period with Mr. C. B. Collins, our attorney in Washington, when I was in Washington in July.

Mr. Collins has advised me that in reviewing the Petaca Minerals Corporation application, our client, that you could not compensate the tonnages of pegmatite ores submitted by Mr. Joe Thompson, President of Petaca Minerals Corp. with your office reports by such men as Dr. Richard Jahns.

I have read Jahns reports very carefully, in fact several times, and have endeavored to apply them to this mining area with on the ground visual reactions. You must consider that Jahns had a relatively large crew of men down here, all students, when he compiled these reports, and in many cases the variances and contradictions that are in Jahns reports are merely the differences between so many people in his staffs, all working on this problem. Also Dr. Jahns is not a mine or mill man but a geologist, and all geologists deal in a pseudo science which places them in an embarassing position to "look underground" much deeper than a layman can look underground. While I sincerely respect Jahn's reports and consider his bulletin as a veritable bible on this area, again you must be guided by the fact that Jahns was concerned in mica, and at that time the economic dictates of markets for columbium, beryl, monazite, etc. that are in abundant occurance in this Petaca dyke, was not a market that caused any oneto go overboard in trying to evaluate these rare minerals at that period of time. All of these minerals have come into market values and prominance since the atomic age of post war years - and many have become valuable only as the work done in rare minerals in relation to new metals for rocket and jet use has been correlated to our post Korean War Days.

It is my firm conviction that if Dr. Jahns were to come back to Petaca today to correlate his opinions to the market values of the rare metals to be recovered from these properties that he would write an entirely different field report. We have nothing static in this field - and to take a cold report written some years ago and evaluate properties by that report today seems to me to be out of step with our national mineral problems.

Mr. Waskey, etc. (cont.)

As to Mr. Thompson's estimates of tonnages, I personally believe that he was under-estimating these tonnages. You, if you could come down here and spend a week or two weeks going over these vast and amazing properties, would probably be the first person to tell Mr. Thompson that his estimates were ridiculously low.

Actually, our problem in this Petaca Mineralized Zone, is that we have too much of everything; One is somewhat like a child in a candy shop that has been given free choice of what he desires - so much is offered that the child becomes confused in making a decision.

The writer speaks with something more than casual knowledge, as I have examined a score or more of pegmatite properties in the western states. It was the writer who ran down the abandoned mines at Deary, Idaho, and brought them to the position of interest these properties occupy today. I have examined pegmatites in Idaho, in Montana, in Washington, in Nevada, in California, in Arizona, in S. Dakota and in New Mexico. My personal frank reaction is that these Petaca pegmatites are the one great national reserve of these ores that exists in the North American Continent! Other engineers agree with me. Some of the men who have written reports on this group of properties for the USBM have candidly stated the same view.

When I was working on the Latah County Pegmatites, and came to the Spokane office in 1950 and met Mr. Klepper and Mr. Weissenborn, of the DMA field team in Spokane, I mentioned that we were then also interested in the Petaca properties. Mr. Klepper, who has spent years with the USGS and has probably as wide an experience in pegmatites as any man I have met and talked with, as he spent considerable time abroad in South America and elsewhere in the last war searching for mica for our Government, then said "what are you wasting your time in Idaho for if you have these New Mexico Petaca pegmatites to work on?

He surprised me, and I talked to some extent with him about these properties. He had been in Petaca during the last war when roads were being build in to the mines and when these mines were being reopened for World War II production. He knew these properties. And his opinion of these properties was that they were amazing in their mineralization scope and bredth.

I am quite sure, Mr. Waskey, that if a man with the knowledge of this type of mineralization, as Mr. Klepper, could be sent down here for a new examination, and with his comparative knowledge of what other important pegmatites, such as Brazil, Idaho, the Carolina and India pegmatites offer, that he could give you the first real insite as to what can be done here.

As you realize, there are few men in the USBM or the USGS service who are practical pegmatite men. The amount of minerals produced from domestic pegmatites in the U. S. has been so insignificant, in comparison to our imports, that pegmatite mines are practically the orphan of the mining world in the States. The situation in N. Carolina is not comparable to a real mining program - as the pegmatites in N. Carolina are practically mined out today,

Mr. Waskey, etc. (cont.)

and they represent the sweat and labor or thousands of small individual operators who worked for starvation wages to get out small amounts of mica - no big operations ever existed in Carolina nor do they today; and the history of all pegmatite areas I have visited and checked is one of sweat and misery and heart aches and untold back aches contributed by individuals who grubbed out a mere existence due to competition with imported mica from low-labor-native hand operated mines in India, Brazil or Madagascar.

Today the door to imported Indian mica is closing up fast. General Electric is, by their own admission, now in "a bad way" to get mica, from scrap on up. Samica has come up with a possible answer with their French Swiss Process to remanufacture mica sheets that will be of ample quality to meet about 80 to 90% of the insulation needs with a new sheet made of "flake Mica." General Electric in Ohio, is working desperately in their Coshocton Plant for Laminated and Insulating Products, to do the same thing as Samica is working on. Mr. Arthur Classen, of Mica Products Corporation in Schenectady, N. Y. is working closely with the Idaho Beryllium and Mica Corporation (as per the work the writer did before I left that construction project) to get a proper flake to replace mica "splits" from India. The last reports I have from our Engineer A. K. Smith, whom we left in Idaho, is that they are working this out very rapidly with Classen and that Classen seems to be well pleased with the De Anza Mill delaminated large flakes.

But Classen talked in terms of needing 10,000,000 pounds per year of these flakes! This did not include General Electric or Westinghouse or others - just Samica's program. Where can they get them domestically today? I do not know.

We must replace cheap native labor that worked in the Indian mines with mechanical processes. And this process, peculiarly,then enables the pulp to go through other classifications for the recovery of the heavy monazite, columbite, tantalite, samarskite rare minerals! We kill several birds with one stone!

I have watched the Government men work in Washington, and I can appreciate their position. It is a difficult situation that you men occupy and you deserve more sympathetic praise than the terrific abuse that accumulates to your credit, by many times.

But I believe that being as badly divorced from industry as you are, that you are too prone to regard pegmatite properties entirely in the light of mere mica sheet properties. And in today's industrial mica problems, and with today's demands for rare minerals (The U. S. Navy alone is asking for 7 times the total known output of Tantalium) we must either see these pegmatites as an ore body that can be handled by the same general process plans as low grade copper ore bodies are regarded, or we are defeating our objective to produce domestically the great tonnages of these materials that must be secured to replace the Indian source of supply. We are not today, in my opinion, primarily concerned about plate mica, its color or its quality, as within a short period of time 80 to 90% of the plate mice end uses will be supplied by new fabricated mica sheet products at a far lower cost and with ample power factor to meet every electrical demand in the great mass number of applications, and with more uniform thickness and with lower cost punch press labor because the sheets will be so big that multiple-die-press punches can be made.

Mr. Waskey, etc. (cont.)

Where then are we going to get this great tonnage of mica to reproduce sheets that will replace clear crystal mica sheets in all but the most exacting end uses? Not from N. Carolina - most of that mica that ends up in grinding mills is "jig" mica of such low grade and such poor values that it is only good for flour mills . . not from New England where production is almost nil; not from Idaho because Idaho could not supply that great amount required; but from either S. Dakota (where again you find a mass of little individually owned mines as in N. Carolina) and from New Mexico.

And only in New Mexico is there offered big properties that can be engineered up to mass tonnage productions. The Petaca properties are in a block area about 6 miles long and 1 to 2 miles wide. These properties have good roads, power, water, good labor supply and more engineering back-log of experience in the staff of the De Anza Engineering Company in this type of mine operation and mill processing than any one group that is available, as trained men, today in the U.S.A.

From the "massive beryl veins" in these properties the beryl production in the U. S. can be doubled or tripled within six months; these mines will produce, properly set up and operated, measurable tonnages of columbium, monazite, samarskite and tantalium; they will produce measurable tonnages of good punch grade mica and a certain percent that will be important, of clear sheet mica, white, rum, amber and even in green color if green is acceptable - all color types listed are found here.

Either our nation needs these minerals and materials, or it does not. If it needs them it needs them today, urgently, and perhaps tomorrow it will need them desperately. It is axiomatic that if we had all the answers to our problems we would have no problems. We think the nation, definitely has a problem in securing an adequate amount of mica products and allied rare minerals found in mica bearing pegmatites

We found our information by contacting Industry. Industry tells us an entirely different story than the advice that came from D.M.A. - i.e. that our mines were rejected because they produced "green" mica (A falacy in fact as it produced many times more tons of rum, amber, smokey and white mica in world war I and II than all of the green mica produced - and the major mines were not green mica mines - it was the marginal mines that high World War II prices brought into production that were responsible for the poor grades of green mica that eventually joined into the "gold rush" of the subsadized prices that the Colonial Mica offered such producers.)

And either our nation's industry needs these products or it don't, and if it does, and if, as General Electric's Mr. Walsch stated, that the electrical industry is "inabad way today" for mica (it will be in a damn bad way soon if something is not done to solve their needs) then we certainly have the mines that warrant field inspection by men like your Mr. Klepper, and a full and fair and impartial evaluation of these properties. . . .

Mr. Waskey, etc. (cont.)

I will bet a new Stetson, and I mean this, that if you, yourself, will come down here, and go over these actually tremendiously large properties, and go underground in mine after mine that has been in actual production and then closed down because of low imported competitive materials, that you will be staggered at the emensity of these mines - and that you will report that Mr. Joe Thompson's figures were purely a minimum for immediate calculations and never in relation to a long term mine operation that could be carried on year after year for fifty years in this area!

In world war II one mine down here shipped a carload a day of plate mica from Petaca over the D.&.R.G. R.R. that came into Servetta at that time, near Petaca! That was one mine! There are scores of mines here, big mines, yet none have even scratched the possible and potential ore reserves!

These mines are historical - probably the oldest continuously operated mines in the United States today - these mines were opened in the 1600's by the Spanish Colonial Governers to secure window pane sheets for Cathederals and Castles and homes - yet all the mining done here has only developed the massive surface area of a pegmatite that is not duplicated anywhere in the U. S. A., Canada or Mexico . . . these are comparisons I know from actual comparisons of pegmatite zones visited and examined. My reactions and opinions are at least based on field work and a pertinent knowledge of the metallurgical phases of these ores - they are not achademic I assure you.

What is the hesitation to make a field examination? Why are these mines pigeon-holed in Washington? It does not make logic to the writer! If we are in error, then rule us out, positively and definitely by experienced field examinors reports. But don't keep these needed minerals from hitting the market because of prejudice as to color or mica - the urgent demands have long ceased to be merely for sheet mica of strategic value- the electrical industry, making a million items dependant on mica, is today in a serious situation unless domestic mica is produced to meet these millions of demands - the entire electrical industry depends on MICA - and to date no one has found a satisfactory substitute for MICA! And that need is TODAY!

Our statements are not spectacular nor histronic in appeal - these are facts that we have accertained from the Electrical Industry, from field surveys, from research.

We think we can offer a great source of mica and rare minerals to Industry, to the demands of the nation for war materials. We think that you too will agree, once these properties are evaluated in the light of todays new mineral and material demands, and in the light of the simplicity and economic methods we can offer to put these properties into end-product deliveries . .

We ask your sincere reconsideration, and your cooperation to that end. May we expect your field examiners down here?

Very truly yours,

(s) Allen White, Pres.
The De Anza Engineering Co
Contractors for: Petaca Minerals Corp.

COPY

THE DE ANZA ENGINEERING COMPANY

420 Market Street, San Francisco 11, California

The De Anza Mill patented

October 29th, 1951

424 Delgado Street
Santa Fe, N. M.

Mr. James A. Barr, Sr.,
Chief Non-Metallics Division
Defense Minerals Administration
New Interior Building
Washington, D. C.

Subject: Petaca Minerals Corp.
Application DMA--1800

Dear Mr. Barr,

It has been way back in early July that I last saw you, but our Washington Attorney, Mr. C. B. Collins, has been keeping me advised of the status of the above application. Quite recently, I am advised by Mr. Joseph Thompson, President of the Petaca Minerals Corporation, that he received a letter from Mr. Tom Lyon, Director Supply Division, D.M.A. that the application had been rejected.

Our company left Idaho the first of October and we finally got our trucks and all of our equipment moved down here and started our engineers out working on these properties. We have, as I believe you were advised, an agreement to build the mill recovery plant for the Petaca Minerals Corporation if an when the mill is constructed. We also have other interests in New Mexico.

Mr. V. M. Carmichael, Geologist and Engineer, came down here first, to run out the claims, totaling 21 lode properties, and has been working here now one month. He has had a splendid opportunity to review and appraise these different mines in the Petaca Minerals Corporation group, and he is anything but terrifically enthusiastic about the mineral possibilities and for the high recovery of heavy rare minerals if a grinding plant is installed.

Previously we employed Mr. A. S. MacCullough, one of the top flight mining men from Canada to inspect these and another copper property down here, and he too is very impressed and definitely convinced these are properties that should be put into immediate production for the recovery of beryl, columbium, tantalium monazite, samarskite, mica books and mica scrap. He is in New York at the moment and has interested the National Lead in working with us.

Inclosed is a typical type of mica from these mines, the type that was mined and produced, I am advised, during the short period of operation for mica during the last war. I believe you will agree that this is not "green" but would be classified as "rum" or smokey mica. This is the type of mica mined from depth. There is considerable green mica in the prospects around the properties, and this comes in stringers and seems to be due to either stain or oxodization or chlorination from surface influence, as the mica seems to change to clear dark mica as the mine is developed to depth.

Personally I am not a mica expert and outside of grinding mica scrap and recovering the values from the pulps I know little about mica as pertains to punch grades or what is termed clear sheets for the more exacting electrical uses. But recently Mr. Arthur Classen, of the Samica Corporation and the Mica Insulator Company of Schenectady, New York, visited the Idaho Mines at my invitation and he advised me that scrap we had out there was now worth 50 ¢ per lb. as splitting mica, and that the mica situation was in a very serious status due to the nationalizing of the mica mines in India, and the chaos that has followed. He said they never today received firm offers and the Indians were always sparing for a price increase, and orders were not being shipped as agreed, even when accepted. He seemed quite concerned over the entire picture, and especially as the influence of the Iron Curtain is creeping rapidly into these Aisatic Countries.

The Samica program, based on French and Swiss patents, is to take mica flake and, with chemical constituents, make these flakes into sheets that are very much improved over anything now manufactured in the U. S. from mica splits or particles. Mr. Classen stated that he believed that this new Samica Sheet would replace the need for 90% of the mica used now in punch shapes and clear up into clear sheets, as it had a power factor of 600, which is more than ample to take care of 90% of the needs of mica insulations in the electrical industry. He believed that this would then permit the best sheets to go over to uses in the most scientific and critical electrical devices and products, thus enabling a stock pile of strategic mica to last much longer in actual measure of consumption use.

Here again Industry in the Electrical business is looking for a new product that can be made domestically with the De Anza Mill more cheaply than if imported from India where hand labor of natives working tediously all day long produce less than 3/4 of one pound per person!

It strikes me that the entire pegmatite program is shooting at the stars - they are trying to find perfection in a measure of a small potential of recoverable strategic mica from domestic sources and are allowing the development of our pegmatites to go by the board because they can not find that "perfection" that is set up by the Munitions Board for strategic mica of a "ruby" color. Naturally "ruby" mica comes from India so we might as well say "Indian Mica."

It is our contention, as engineers, that the only solution to the pegmatite program is to follow the basic lines set forth in Paul M. Tylers bulletin "Economics of Pegmatites." In this bulletin he states, in intent, that until pegmatites are handled as other ores, and the recoveries of heavy rare metals and mica flake for flour and other uses is adapted that the mica mines are destined to remain in the same class of operations that they have been in, in this country, for the last 100 years - a free ticket to bankrupsy if operated as mica mines.

When much of the Geology on this area was written there was neither an imperative need for columbium, tantalium, monazite, samarskite or beryl - in fact the controlling economics of such recoveries at the going prices for these metals in the days these reports were written dulled the curiosity of the very field men that made the reports. It is like looking at massive formations of exceptionally pure spars - if they have no market we forget to measure them or consider them, and they become a mere incident in our observations if we are geologizing for book mica. And that is what has taken place, in the main, in all the field explorations of the Petaca Mining District.

In the light of the post Korean War demands - the factual realization that we must have these rare heavy metals to make our new jets, we must have more and more beryl to make our atomic power units for both planes and submarines, it seems to me, Mr. Barr, that this entire zone warrants field examinations in relation to the vitally strategic metals that these mines can supply if developed on a mass ore reduction basis.

Dr. Jahns nor the U.S.B.M. had little incentive to turn these mineralized zones inside out for close scruteny when they were down here - actually all they were primarily concerned in was sheet mica . . .

If you check the market prices on all the rare minerals that these mines offer to us today, by the values that were available if such rare minerals were mined and sold at the time these reports were written, I believe you will see the point of contention I am making to the action that was taken by DMA on this application.

If an engineer is governed by a market on lead and zinc that is economically not good for a marginal mine he looks for gold or silver to see if the mine can be put into operation - and that is what has happened in the Petaca Mining District. Just keep in mind that the Germans have taught us the urgent need for most of these rare minerals - lessons we learned months after the last war ended - when we had time to discover how far advanced they were in the metallurgy that dictated whether jets and rockets and super-sonic weapons could be manufactured. . .

Priorities put the paint industry on short measure of lead and zinc; India has forced the Electrical Industry to look to remanufactured mica insulation made from mica flakes; Atomic Power units for new planes and subs need more beryl; Atomic weapons need more monazite and samarskite; the Electrical Industry is short on punch grades of sheet mica; the Government sets up specifications for Mica Pegment Paint for the Army Transport, Navy, Coast Guard, Air Corp because it is fire resistant and weathers better - yet the application is turned down because Petaca Mica is not the color of the "ruby" mica that comes from India! In these continental United States can we find "ruby" mica anywhere? Here is a paradox of hungry industrial demands for products these mines can produce and make into war materials but we are ruled out by a minute phase of the total of all the products that could be produced down here by the "color" of the mica sheets!

Primarily I feel that the entire Petaca Application warrants a review - not on its potential sheet mica production potentiality, but on its beryl, rare heavy mineral and mica flake for the electrical industry values to our National Economy in todays war preparation program.

Jahns is not a metallurgist, nor a mill man, nor has he been schooled in the new and modern flow-sheets for separations of these minerals. We look at these mines with different eyes than Jahns. And we think that if you will send competitent men, like your field men in Spokane, Klepper and Barsdale, to re-evaluate these mines from the experience they have had in years of pegmatite work, that you will find an entirely new avenue for appraisal of this application.

The Harding Beryl mine, on the same pegmatite dyke, as it continues eastward toward Las Vegas, N. M., has the second massive beryl vein ever brought to the attention of the mining world! Jahns turned this down. The U.S.B.M. drilled this mine and put approximately 28 drill holes through the beryl vein and still turned it down! Why ? Because when such orthodox examinations as had been made of pegmatite ore bodies for years were the yard stick the mine did not fit the yard stick!

Today the Harding mine produces 4 to 5 tons of massive beryl running 12% BeO per day - with 5 men! It could produce 100 tons if taxes would not consume the owners. We feel positive the same massive beryl vein roll is in the Petaca Mining District - Mr. Anderson, Director at the School of Mines in Socorro School of Mines, agrees. If so then the Petaca Mining Area is really a real "treasure chest" for national defense!

I personally feel that this Petaca zone needs a new appraisal by competient field men. And if there is one thing you can do for us, Mr. Barr, it is to get some very capable men down here for that purpose. You can help us no-end if you will, by doing that for us first.

Thank you for all the favors and kindness extended to our Mr. Collins, and in the final analysis what we are all striving for is production of needed minerals, and we feel that we have a friend in you for the Petaca area - in our mind this area can give up much to our nation for such a little in the way of help from the D.M.A.

Sincerely yours,

Allen White, Pres.,
The De Anza Engineering Company
New Field Office:
424 Delgado Street, Santa Fe, N. M.

PROPOSED MILL FLOW SHEET
FOR TREATING PEGMATITE AND DUMP MATERIAL
TO RECOVER MICA AND BERYL

IDAHO BERYLLIUM AND MICA CORPORATION

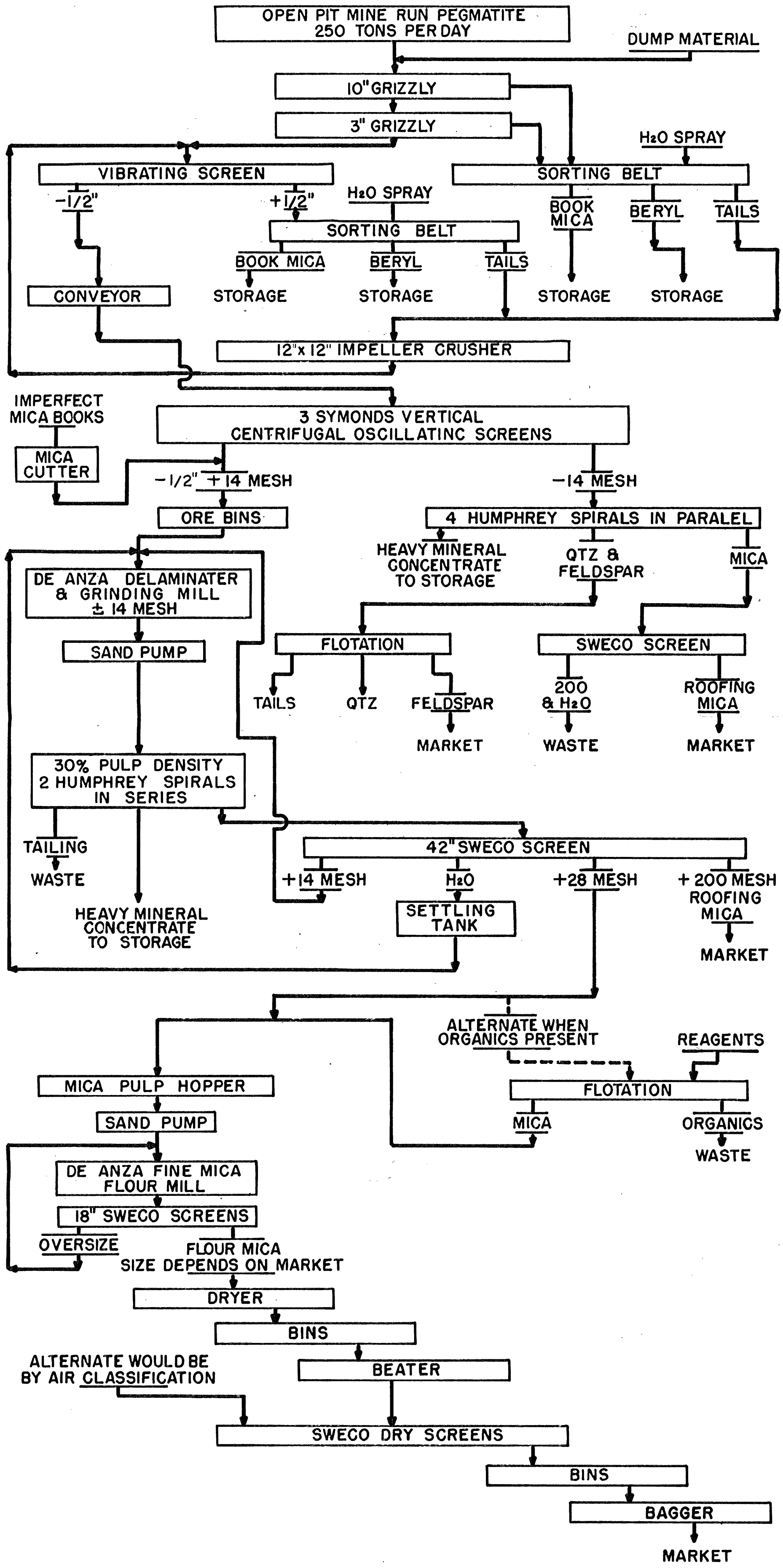

KEUFFEL & ESSER CO., N. Y. NO. 359-ELG
10 × 10 to the inch.
MADE IN U.S.A.

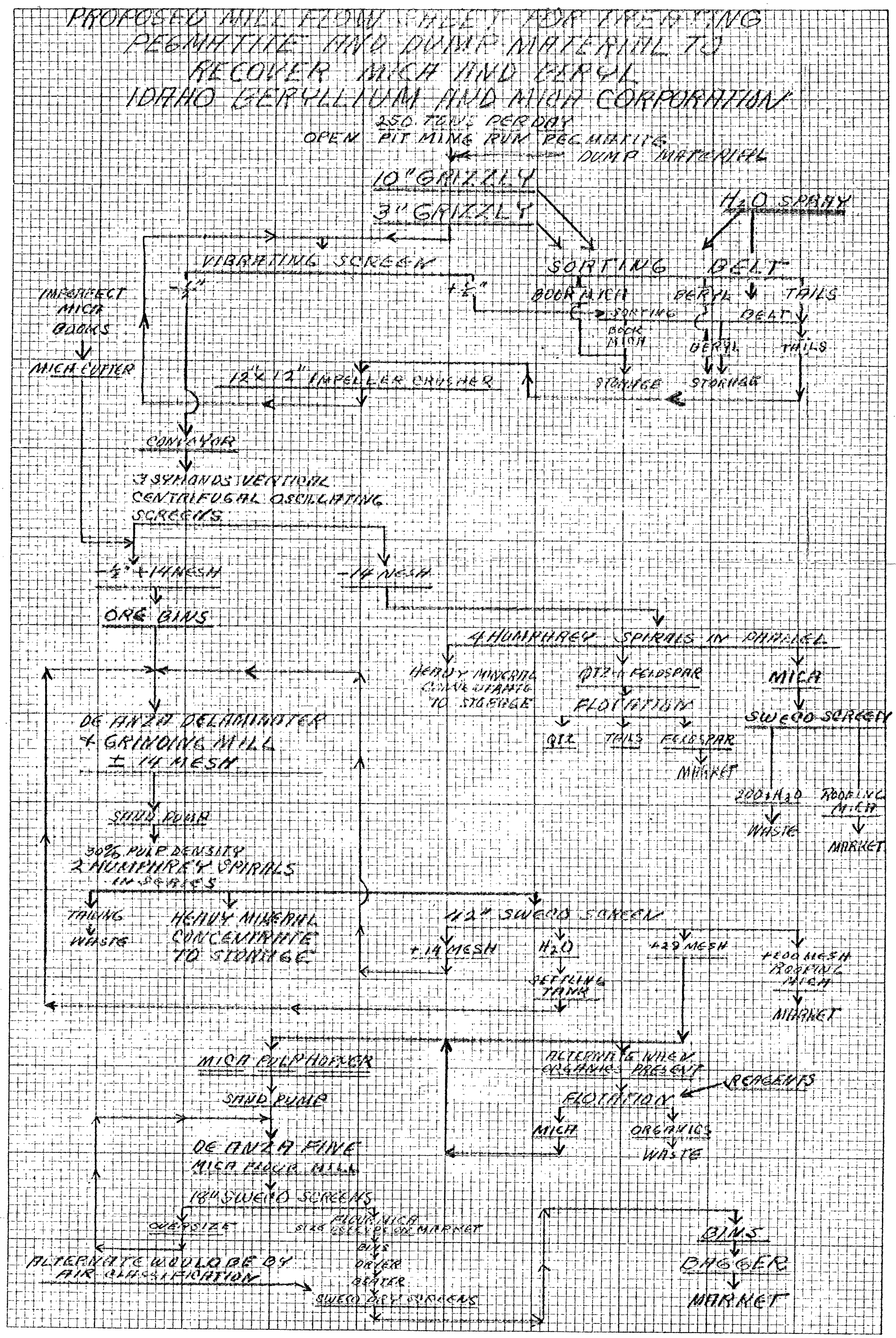

KEUFFEL & ESSER CO., N. Y. NO 359-5LG
.9 x 10 to the inch.
MADE IN U.S.A.

PROPOSED MICA FLOW SHEET FOR TREATING PEGMATITE AND DUMP MATERIAL TO RECOVER MICA AND BERYL IDAHO BERYLLIUM AND MICA CORPORATION

250 TONS PER DAY
OPEN PIT MINE RUN PEGMATITE
DUMP MATERIAL

10" GRIZZLY
3" GRIZZLY
H_2O SPRAY
VIBRATING SCREEN
SORTING BELT
-½" +½"
BOOK MICA
BERYL
TAILS
SORTING BELT
BOOK MICA
BERYL
TAILS
STORAGE
STORAGE
IMPERFECT MICA BLOCKS
MICA CUTTER
12"x12" IMPELLER CRUSHER
CONVEYOR
3 SYMONDS VERTICAL CENTRIFUGAL OSCILLATING SCREENS
-½" +14 MESH
-14 MESH
ORE BINS
4 HUMPHREYS SPIRALS IN PARALLEL
HEAVY MINERAL CONCENTRATE TO STORAGE
QTZ + FELDSPAR
MICA
FLOTATION
QTZ
TAILS
FELDSPAR
MARKET
SWECO SCREEN
DE ANZA DELAMINATOR + GRINDING MILL ± 14 MESH
200 + H_2O
ROOFING MICA
WASTE
MARKET
SAND PUMP
30% PULP DENSITY
2 HUMPHREYS SPIRALS IN SERIES
TAILING
WASTE
HEAVY MINERAL CONCENTRATE TO STORAGE
+12# SWECO SCREEN
+14 MESH
H_2O
SETTLING TANK
+28 MESH
+200 MESH ROOFING MICA
MARKET
MICA PULPHOLDER
SAND PUMP
ALTERNATE WHEN ORGANICS PRESENT
REAGENTS
FLOTATION
MICA
ORGANICS
WASTE
DE ANZA FINE MICA FLOUR MILL
18" SWECO SCREENS
OVERSIZE
FLOUR MICA SIZE ESTIMATED MARKET
BINS
BAGGER
MARKET
ALTERNATE WOULD BE BY AIR CLASSIFICATION
DRYER
HEATER
SWECO DRY SCREENS